L-force
Geared motors

Efficient and precisely tailored

NEW

With IE2 high efficiency motors to IEC 60034-30

Lenze

This is what we stand for.
You want to implement your machine and plant concepts efficiently and easily or optimise existing concepts to reduce costs? Then, Lenze is the partner you are looking for. For more than 60 years, drive and automation systems have been our core competence.

Drive and automation technology from Lenze keep things moving – for example in the areas of materials handling, robotics and component handling as well as in packaging facilities for the intralogistics and automotive sectors and the food and beverage industries.

Lenze | about us

We can offer you automation solutions including control, visualisation and drive technology from a single source. Our drive systems will improve the performance of your machines. From project planning to commissioning, we have the know-how, whilst our international sales and service network can provide you with expert help and advice at any time.

Cut your process costs and increase your ability to compete. Let us analyse your drive technology tasks and support you with made-to-measure solutions. We can take an integrated approach to projects thanks to the scalability of our products and the scope of the overall portfolio. We can get the best from your machines and systems.

At your side all over the world – with thorough and professional support from our motivated team.

System overview | L-force geared motors

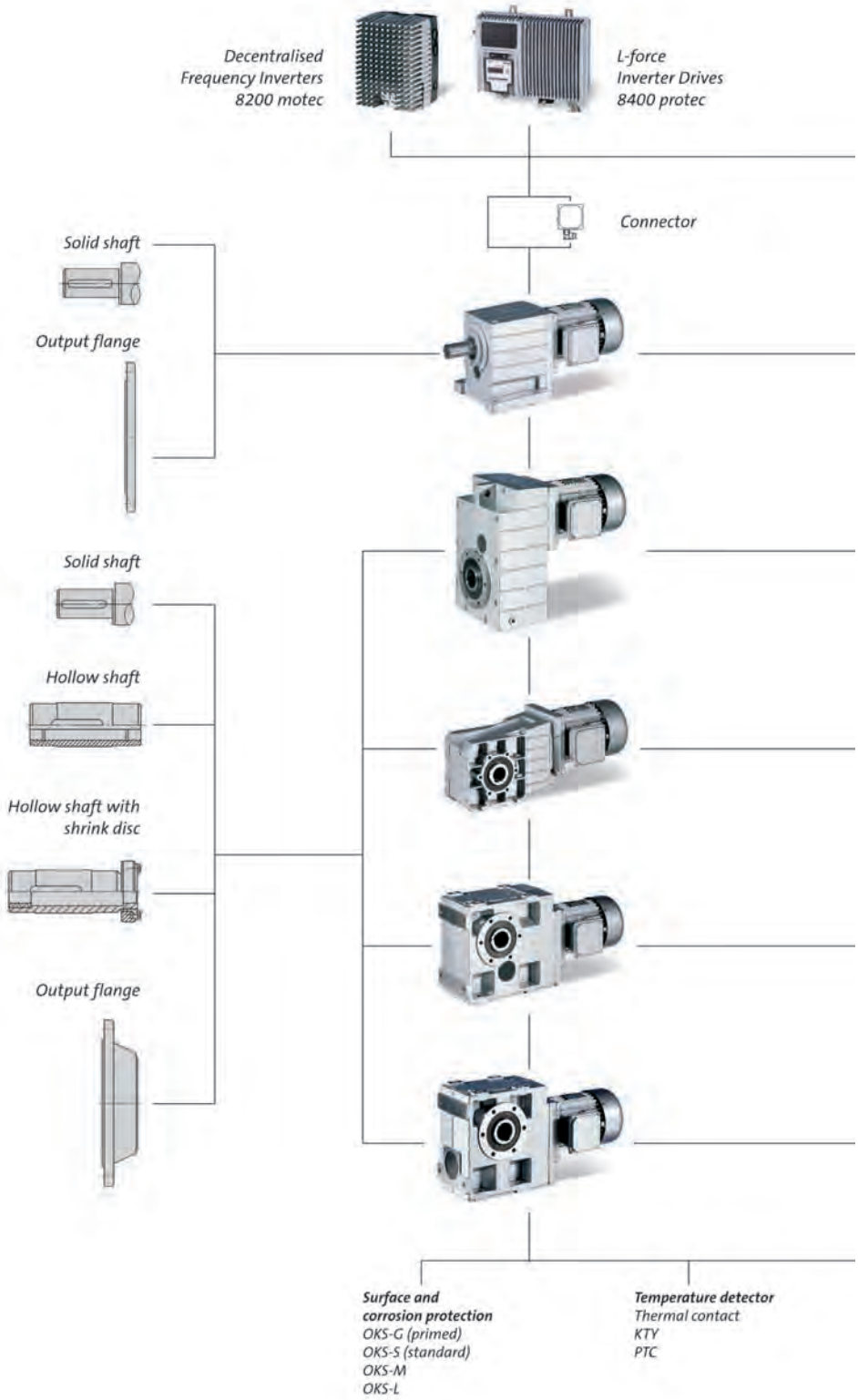

L-force
Inverter Drives 8400

Mains operation

Helical geared motors
GST
0.6 to 45 kW
Parallel-axial solid shaft geared motors in foot and flange mounting.

Shaft-mounted helical geared motors
GFL
0.12 to 45 kW
Particularly compact with hollow shaft, can be used as shaft-mounted gearbox.

Bevel geared motors
GKR
0.06 to 7.5 kW
Highly efficient right-angle geared motors with wear-free bevel gear toothing.

Helical-bevel geared motors
GKS
0.12 to 45 kW
Solid shaft or hollow shaft right-angle geared motor with high level of efficiency.

Helical-worm geared motors
GSS
0.12 to 15 kW
Value for money right-angle worm geared motors with high power density.

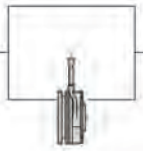

Spring-applied brake

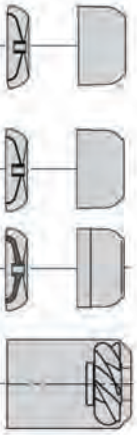

Integral fan

Integral fan + handwheel

Integral fan with increased inertia

Blower

Speed/ position encoder

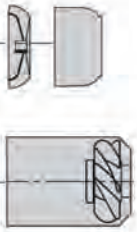

Integral fan

Blower

Efficiency classes
Standard efficiency (IE1)
High efficiency (IE2)

Approvals
CE
cULus
EAC
GOST
UkrSepro

L-force | Your future is our drive

Demands are increasing all the time. In future, key challenges will lie in the areas of cost efficiency, time-saving and quality improvements. Faster project planning and commissioning, improved performance and increased flexibility in production are expected. New ideas are therefore needed for the machines of the future.
Lenze has risen to this challenge and, with L-force, we can now not only offer you an innovative family of drive and automation products, but also a new, comprehensive portfolio of solutions.

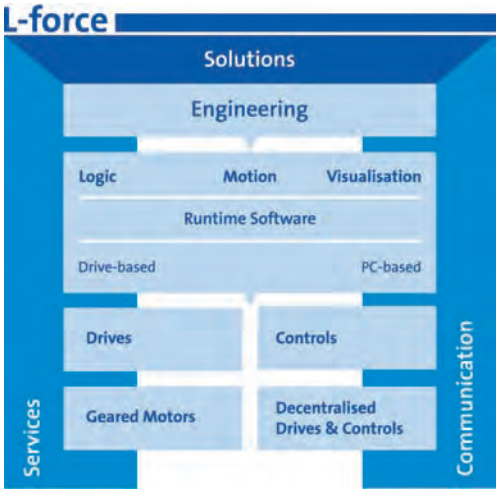

Driven by innovation – new ideas that open up new opportunities
Always on the lookout. Our idea of innovation is striving for better solutions for our customers every single day.

Driven by flexibility – High degree of scalability for individual solutions
Scalability is an important aspect of the **L-force** philosophy. Performance, scope of functions, software, service provisions and aftersales care – Lenze will provide you with exactly the combination you require.

Driven by usability – Simple solutions, even for complex applications
We always focus on the user. Therefore, when we developed **L-force**, we made sure that people with sufficient practical experience were involved, right from the start.

Driven by compatibility – Universal products and solutions
There is no need to waste time looking for suitable components and the right interfaces. With **L-force**, every element is perfectly matched.

Our drive is "rightsized" – the perfect solution for your application
We call it Rightsizing: Optimise your processes with Lenze geared motors and increase your added value.

Overview | L-force geared motors

Contents 8

General information 16

Drive dimensioning 41

GST Helical geared motor 55

GFL Shaft-mounted helical geared motors 251

Bevel geared motor GKR 445

GKS Helical-bevel geared motor 521

GSS Helical-worm geared motors 707

Three-phase AC motors M□□MA 839

Lenze world-wide 906

Contents | L-force geared motors

General information

Product key
- Helical geared motors 16
- Shaft-mounted helical geared motors 18
- Bevel geared motors 20
- Helical-bevel geared motors 22
- Helical-worm geared motors 24
- Three-phase AC motors 26

Product information
- Geared motors 27
- General information about the data provided in this catalogue 28

List of abbreviations 29
Notes on ordering 30
Ordering details checklist 31
- Helical geared motors 32
- Shaft-mounted helical geared motors 33
- Bevel geared motors 34
- Helical-bevel geared motors 35
- Helical-worm geared motors 36
- Three-phase AC motors options 37

Notes on the selection tables 39

Drive dimensioning

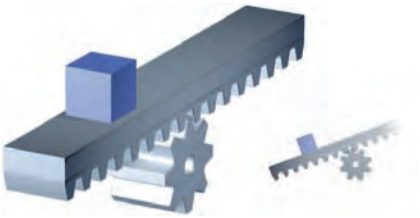

Dimensioning
- Thermal power limit 41
- Load capacity c 42
- Application factor k 42
- Torque derating at low motor frequencies 43

Gearbox designs
- General data 44
- Ventilation 45
- Lubricants 46
- Surface and corrosion protection 47

Three-phase AC motor versions
- Standards and operating conditions 49
- Options 50

Contents | L-force geared motors

GST Helical geared motor

GST [N] - forces
Permissible radial and axial forces at output 55
GST ['] - backlash
Output backlash in angular minutes 59
GST [kgcm^2] - moments of inertia
GST□□-1 61
GST□□-2 62
GST□□-3 66
GST [⊗] - ventilation
Position of ventilation, sealing elements and oil level check 68
Compensation reservoir for mounting position C 71
GST [kg] - Weights
MD□MA (IE1) 72
MH□MA (IE2) 78
GST [Nm] - selection tables
MD□MA (IE1) 84
MH□MA (IE2) 179
GST [mm] - dimensions
MD□MA (IE1) 212
MH□MA (IE2) 230
GST & [mm] - Additional dimensions
GST□□-2/3M VAR 248
GST□□-2/3M VAL 249

Contents | L-force geared motors

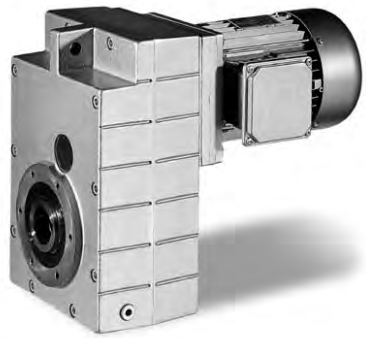

GFL Shaft-mounted helical geared motors

GFL [N] - forces
Permissible radial and axial forces at output 251
GFL ['] - backlash
Output backlash in angular minutes 255
GFL [kgcm^2] - moments of inertia
GFL□□-2 256
GFL□□-3 259
GFL [⊗] - ventilation
Position of ventilation, sealing elements and oil level check 261
Compensation reservoir for mounting position C 263
GFL [kg] - weights
MD□MA (IE1) 264
MH□MA (IE2) 276
GFL [Nm] - selection tables
MD□MA (IE1) 289
MH□MA (IE2) 374
GFL [mm] - dimensions
MD□MA (IE1) 406
MH□MA (IE2) 422
GFL & [mm] - Additional dimensions
Hollow shaft with shrink disc 438
Foot mounting in position 3 440
Foot mounting in position 4 441
Rubber buffer for torque plate 442
Mounting set for hollow shaft circlip - Proposed design for auxiliary tools 443

Contents | L-force geared motors

Bevel geared motor GKR

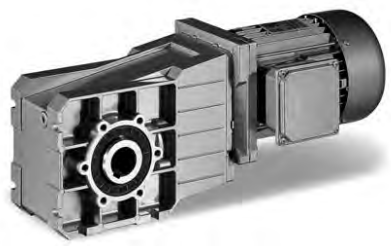

GKR [N] - forces
Permissible radial and axial forces at output 445
GKR ['] - backlash
Output backlash in angular minutes 448
GKR [kgcm²] - moments of inertia
GKR□□-2 449
GKR [⊗] - ventilation
Position of ventilation, sealing elements and oil level check 450
GKR [kg] - weights
MD□MA (IE1) 451
MH□MA (IE2) 454
GKR [Nm] - selection tables
MD□MA (IE1) 457
MH□MA (IE2) 490
GKR [mm] - dimensions
MD□MA (IE1) 498
MH□MA (IE2) 506
GKR & [mm] - Additional dimensions
Hollow shaft with shrink disc 514
Hoseproof hollow shaft cover 515
Gearbox with 2nd output shaft end 515
Rubber buffer for torque plate 516
Torque plate on threaded pitch circle 517
Torque plate at housing foot 519
Mounting set for hollow shaft circlip - Proposed design for auxiliary tools 520

Contents | L-force geared motors

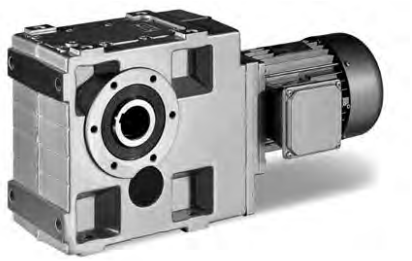

GKS Helical-bevel geared motor

GKS [N] - forces
Permissible radial and axial forces at output 521
GKS ['] - backlash
Output backlash in angular minutes 525
GKS [kgcm^2] - moments of inertia
GKS□□-3 526
GKS□□-4 530
GKS [⊗] - ventilation
Position of ventilation, sealing elements and oil level check 533
Compensation reservoir for mounting position C 535
GKS [kg] - weights
MD□MA (IE1) 536
MH□MA (IE2) 542
GKS [Nm] - selection tables
MD□MA (IE1) 549
MH□MA (IE2) 637
GKS [mm] - dimensions
MD□MA (IE1) 668
MH□MA (IE2) 684
GKS & [mm] - Additional dimensions
Hollow shaft with shrink disc 700
Hoseproof hollow shaft cover 701
Gearbox with 2nd output shaft end 702
Torque plate on threaded pitch circle 703
Torque plate at housing foot 704
Mounting set for hollow shaft circlip - Proposed design for auxiliary tools 705

Contents | L-force geared motors

GSS Helical-worm geared motors

GSS [N] - forces
Permissible radial and axial forces at output 707
GSS [kgcm^2] - moments of inertia
GSS□□-2 710
GSS□□-3 712
GSS [η] - efficiency
GSS□□-2 714
GSS□□-3 718
GSS [⊗] - ventilation
Position of ventilation, sealing elements and oil level check 721
GSS [kg] - weights
MD□MA (IE1) 723
MH□MA (IE2) 729
GSS [Nm] - selection tables
MD□MA (IE1) 733
MH□MA (IE2) 788
GSS [mm] - dimensions
MD□MA (IE1) 802
MH□MA (IE2) 818
GSS & [mm] - Additional dimensions
Hollow shaft with shrink disc 834
Hoseproof hollow shaft cover 835
Gearbox with 2nd output shaft end 835
Torque plate on threaded pitch circle 836
Torque plate at housing foot 837
Mounting set for hollow shaft circlip - Proposed design for auxiliary tools 838

Contents | L-force geared motors

Three-phase AC motors

Rated data of MD type of motor
- 4-pole motors ... 839
- 2-pole motors ... 844
- 6-pole motors ... 846

Rated data of MH type of motor (IE2)
- 4-pole motors ... 847

Motor connection
- Motor terminal box ... 850
- Motor terminal box with ICN connector ... 853
- Motor terminal box with HAN-10 E connector ... 856
- Motor terminal box with HAN modular connector ... 856
- Connector for feedback ... 859
- ICN connector for blower ... 860
- Decentralised frequency inverter 8200 motec ... 861

Spring-applied brake
- Features and assignments ... 862
- Brake connection ... 866
- Brake data, reduced braking torque ... 868
- Brake data, standard braking torque ... 870
- Brake data, increased braking torque ... 872
- Permissible friction energy ... 874

Blower
- Rated data ... 875

Feedback
- Resolver ... 877
- Incremental encoder and SinCos absolute value encoder ... 878

Thermal sensor
- TKO thermal contacts ... 879
- PTC thermistor ... 879
- KTY continuous temperature sensor ... 880

Handwheel ... 881

Centrifugal mass ... 882

Contents | L-force geared motors

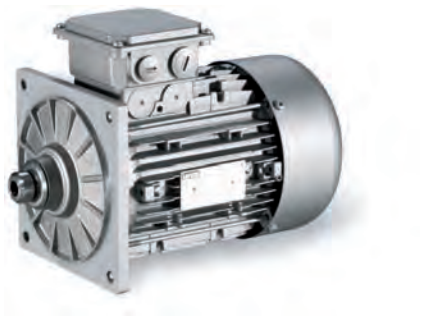

Three-phase AC motors

Dimensions [mm]

Motors with integral fan ____ 883
Motors with integral fan and protection cover ____ 885
Motors with integral fan and 2nd shaft end ____ 887
Motors with integral fan and handwheel ____ 889
Motors with blower ____ 890
Motors with blower and protection cover ____ 892
Motors with manual brake release lever ____ 894
Motor terminal box KK1 ____ 896
Motor terminal box KK2 ____ 897
Motor terminal box KK3 ____ 898
Motor terminal box KK1 with ICN connector ____ 899
Motor terminal box KK2 / KK3 with ICN connector ____ 900
ICN connector for blower ____ 901
Motor terminal box with HAN-10E / HAN-Modular connector ____ 902
Decentralised frequency inverter 8200 motec ____ 904

Helical geared motors

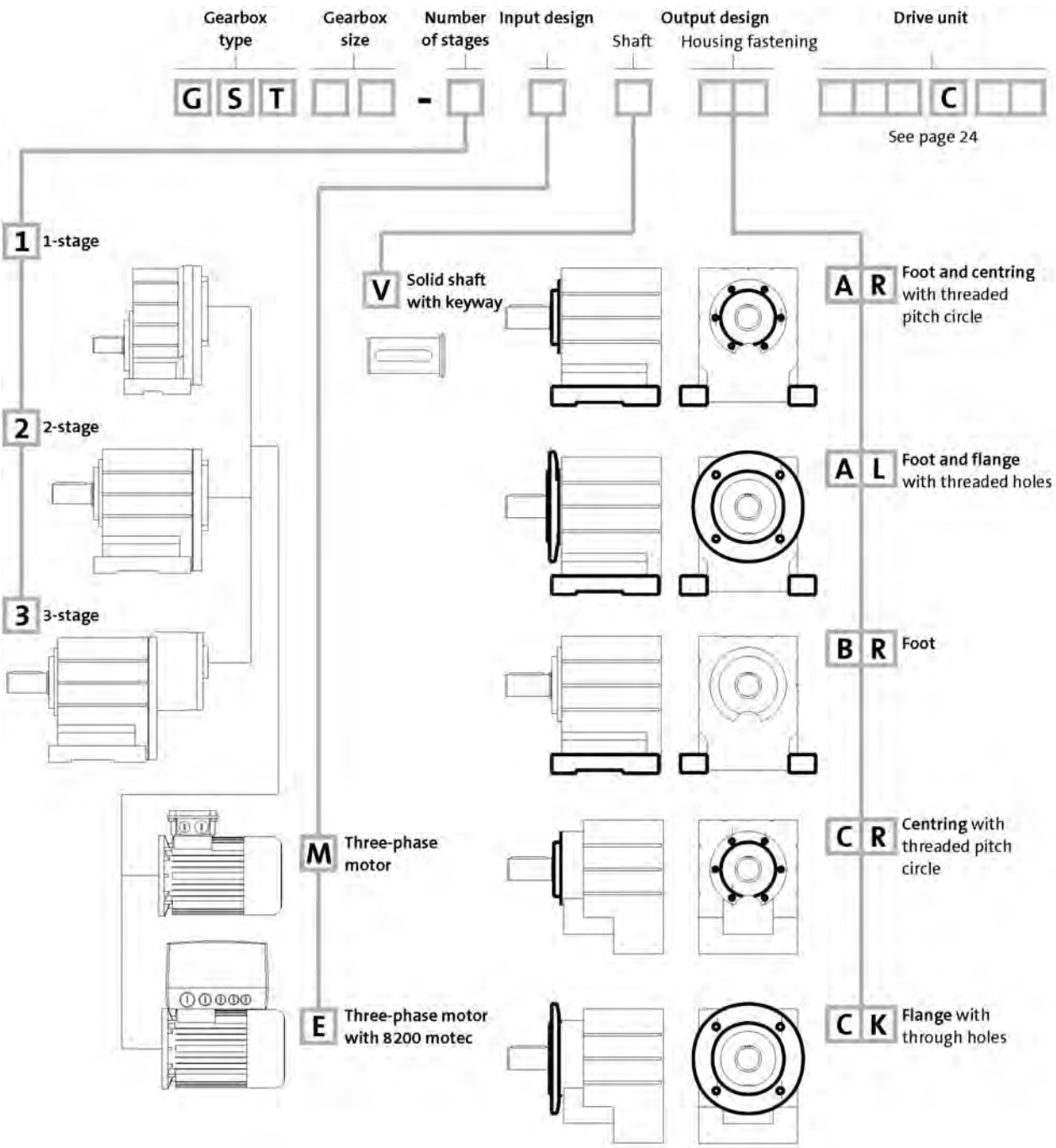

	Output design		
	V	K	L
	d x l [mm]	Øa2 [mm]	Øa2 [mm]
GST03-2	14x28	120/140/160	
	20x40	120/140/160	
GST04-1	16x32	120/140/160	
GST04-2	20x40	120/140/160	120/140
GST05-1	20x40	120/140/160/200	
GST05-2/3	25x50	120/140/160/200	120/140/160
GST06-1	25x50	160/200	

	Output design		
	V	K	L
	d x l [mm]	Øa2 [mm]	Øa2 [mm]
GST06-2/3	30x60	160/200	160/200
GST07-1	30x60	200/250	
GST07-2/3	40x80	200/250	200/250
GST09-1	40x80	250/300	
GST09-2/3	50x100	250/300	250/300
GST11-2/3	60x120	300/350	300/350
GST14-2/3	80x160	350/400	350/400

Mounting position (A...F) and position of system blocks (1...6)

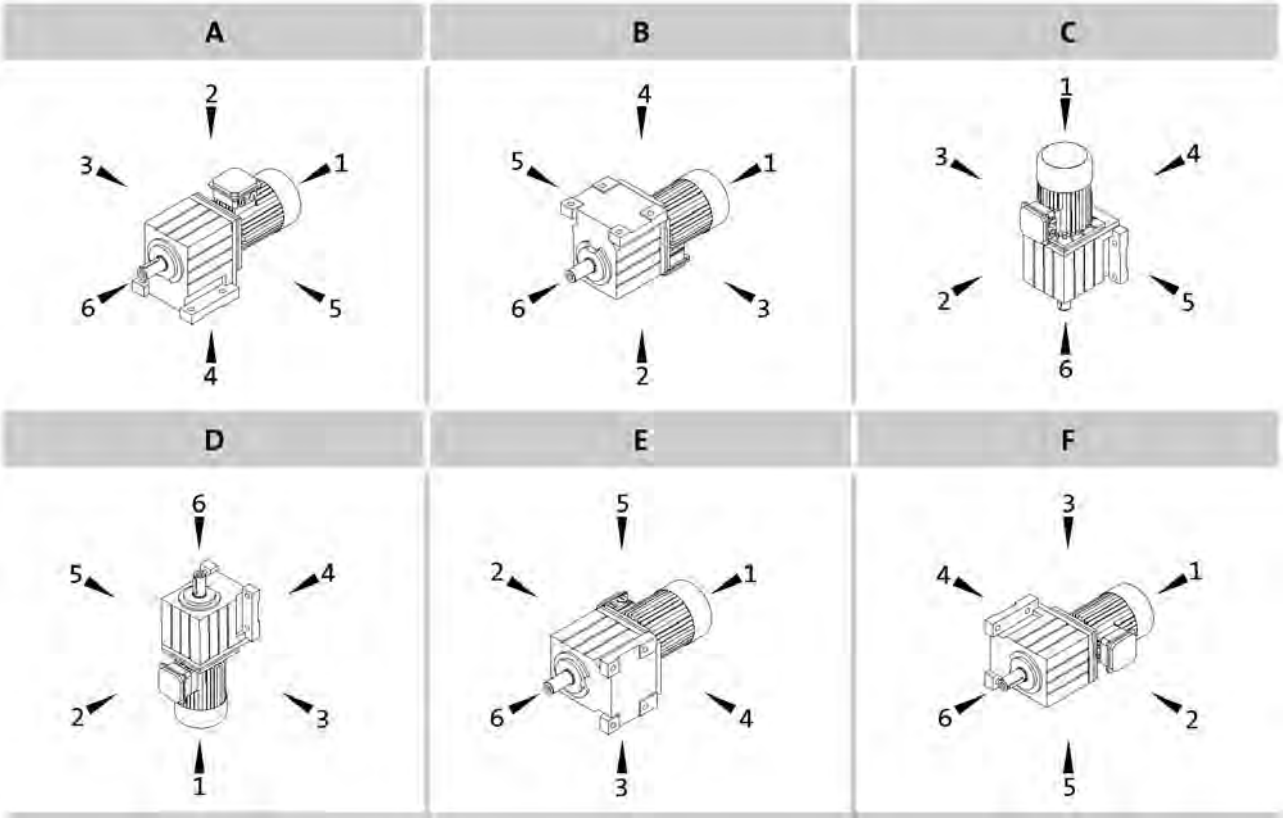

Terminal box / motec: 2, 3, 4, 5

Gearbox designs

Basic versions	
Motor efficiency	Standard efficiency Increased efficiency (IE2)
Surface and corrosion protection	No OKS (unpainted, aluminium housing) for GST03 OKS-G (primer: grey) OKS-S (paint: RAL 7012)
Lubricant	CLP 460 (mineral)
Ventilation	Oil control plugs for GST05 ... 14 Breather elements for GST06 ... 14

Options	
Surface and corrosion protection	OKS-G (primer: grey) for GST03-2 OKS-S (special paint according to RAL) OKS-M (special paint according to RAL) OKS-L (special paint according to RAL)
Lubricant	CLP HC 320 (synthetic) CLP HC 220 USDA H1 (synthetic)
Shaft sealing rings	Driven shaft: Viton
Bearings	Driven shaft: reinforced for GST04 ... 09-2/3
Ventilation	Breather elements for GST05 Compensation reservoir for GST09 ... 14-2 in mounting position C
Nameplate	Metal nameplate (supplied loose) Adhesive nameplate (supplied loose)

Shaft-mounted helical geared motors

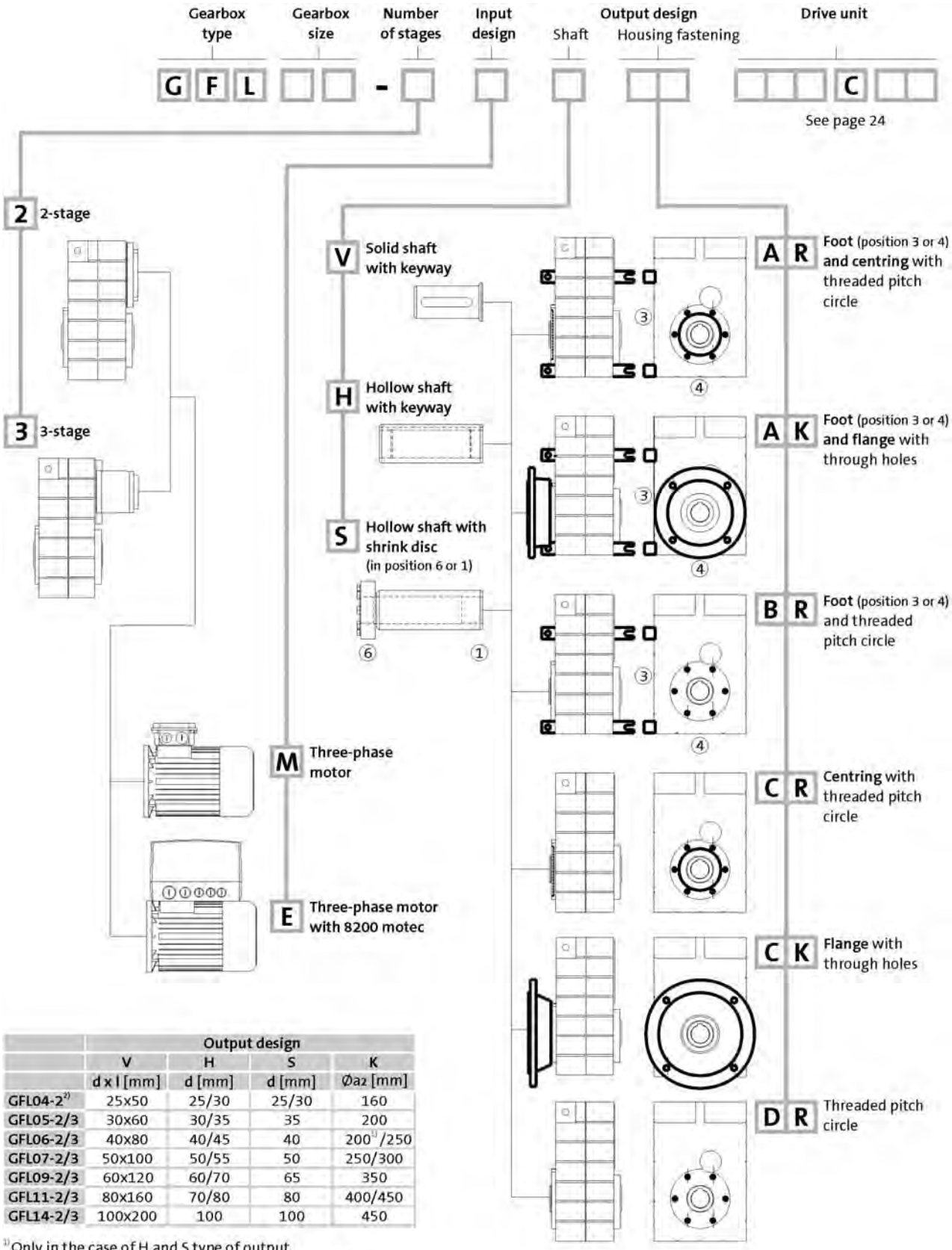

	Output design			
	V	H	S	K
	d x l [mm]	d [mm]	d [mm]	Øa2 [mm]
GFL04-2[2]	25x50	25/30	25/30	160
GFL05-2/3	30x60	30/35	35	200
GFL06-2/3	40x80	40/45	40	200[1]/250
GFL07-2/3	50x100	50/55	50	250/300
GFL09-2/3	60x120	60/70	65	350
GFL11-2/3	80x160	70/80	80	400/450
GFL14-2/3	100x200	100	100	450

[1] Only in the case of H and S type of output
[2] Output H version not possible with motor size 090

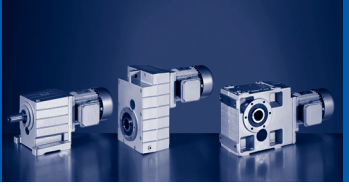

Mounting position (A...F) and position of system blocks (1...6)

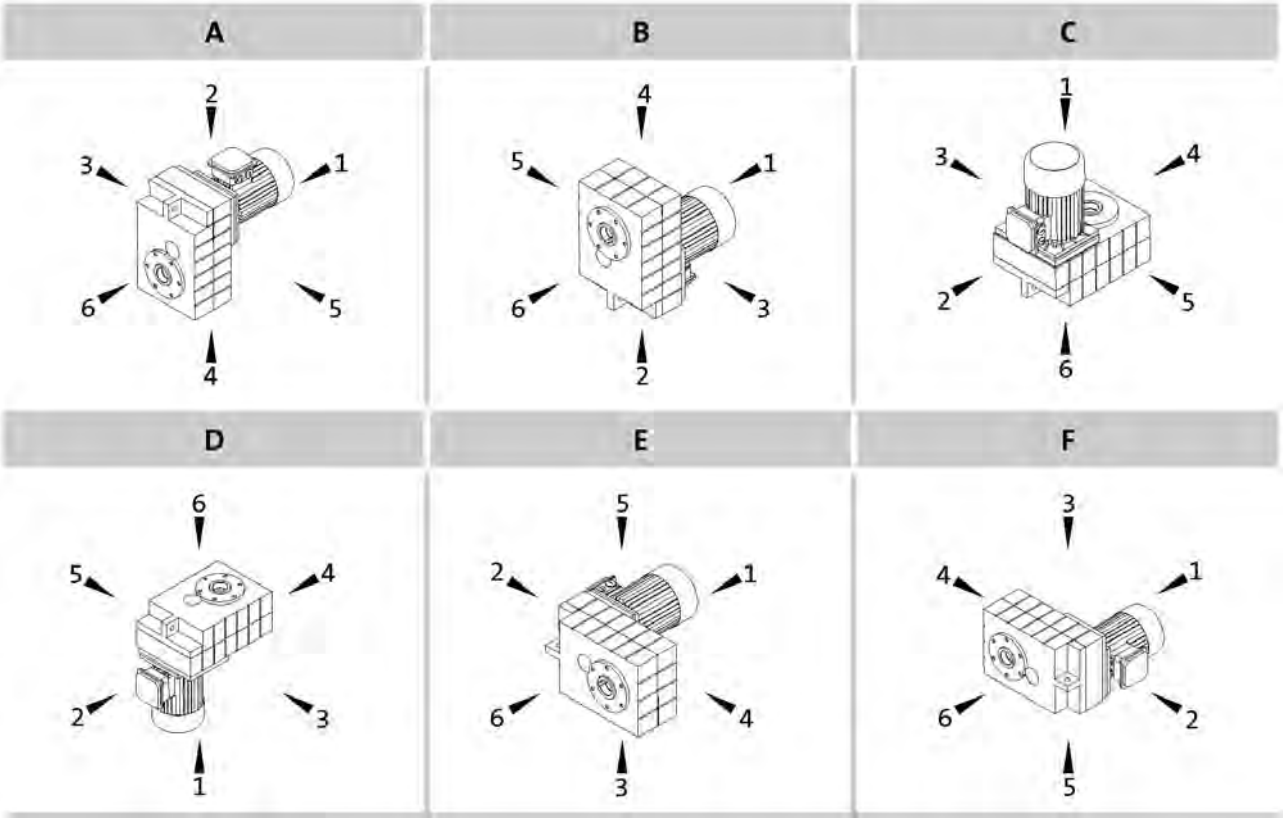

Hollow shaft: 0
Solid shaft: 6
Hollow shaft with shrink disc: 1, 6

Without foot: 0
Foot: 3, 4
Terminal box / motec: 2, 3, 4, 5

Gearbox designs

Basic versions	
Motor efficiency	Standard efficiency Increased efficiency (IE2)
Surface and corrosion protection	OKS-G (primer: grey) OKS-S (paint: RAL 7012)
Lubricant	CLP 460 (mineral)
Ventilation	Oil control plugs for GFL05 ... 14 Breather elements for GFL06 ... 14

Options	
Surface and corrosion protection	OKS-S (special paint according to RAL) OKS-M (special paint according to RAL) OKS-L (special paint according to RAL)
Lubricant	CLP HC 320 (synthetic) CLP HC 220 USDA H1 (synthetic)
Shaft sealing rings	Driven shaft: Viton
Ventilation	Breather elements for GFL05 Compensation reservoir for GFL09 ... 14-2 in mounting position C
Accessories	Rubber buffer for torque plate Shrink disc cover Mounting set for hollow shaft circlip
Nameplate	Metal nameplate (supplied loose) Adhesive nameplate (supplied loose)

Bevel geared motors

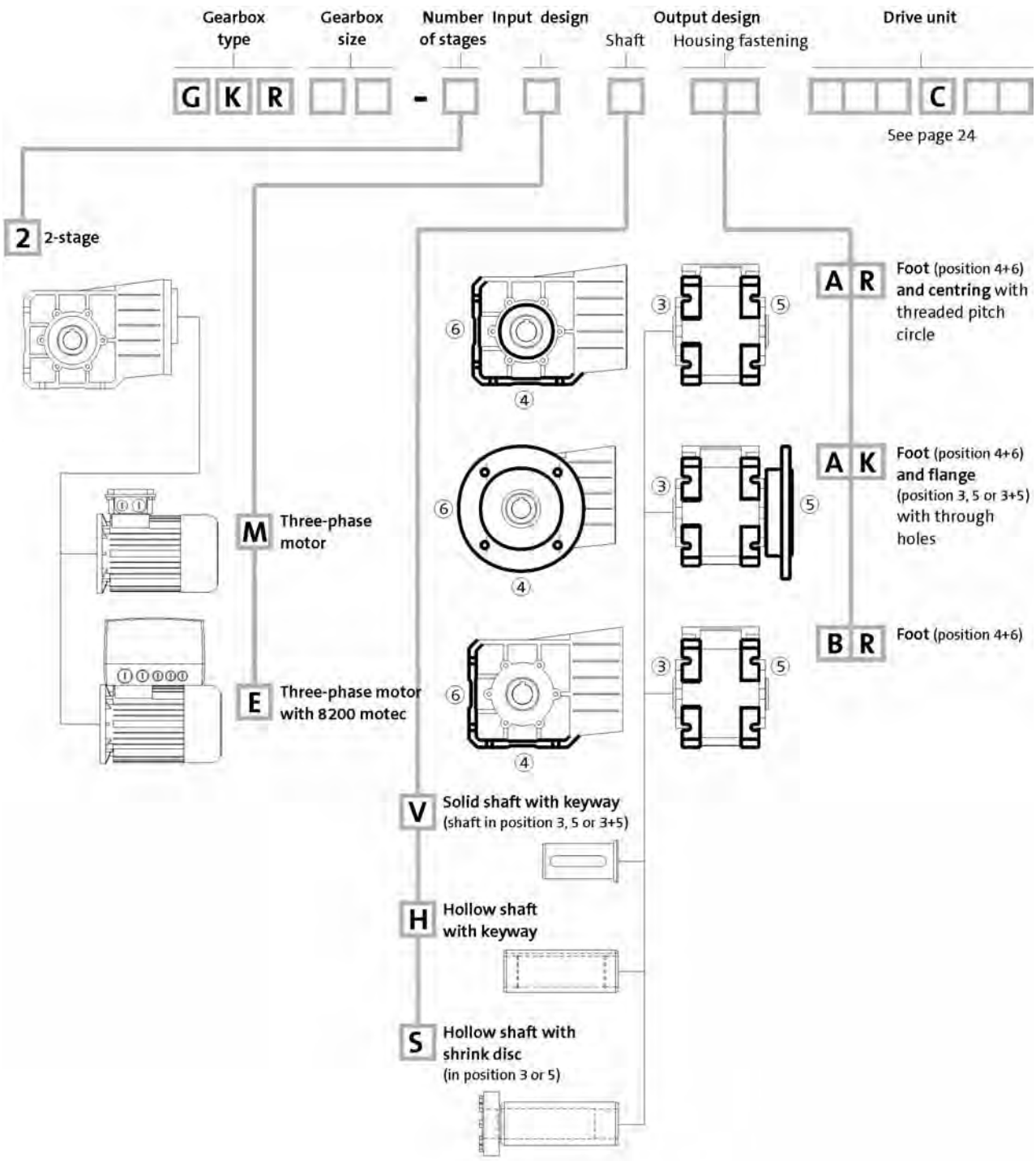

	Output design			
	V	H	S	K
	d x l [mm]	d [mm]	d [mm]	Øa2 [mm]
GKR03-2	20x40	18/20	20	110/120
GKR04-2	20x40	20/25	20	120/160
GKR05-2	30x60	30/35	30/35	160/200
GKR06-2	35x70	40/45	40	200/250

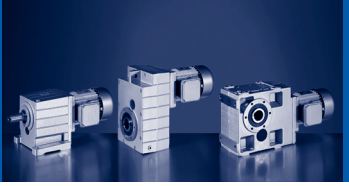

Mounting position (A...F) and position of system blocks (1...6)

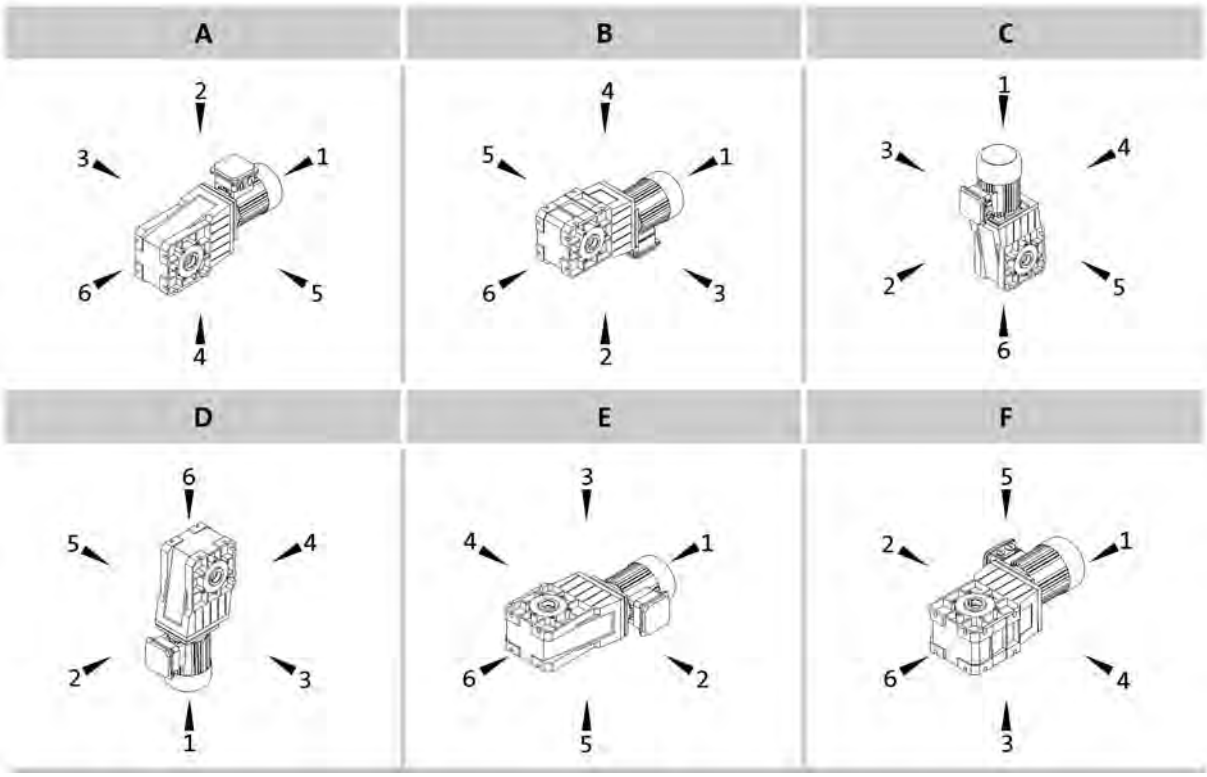

Hollow shaft: 0
Solid shaft: 3, 5, 8 (3+5)
Hollow shaft with shrink disc: 3, 5

Without flange: 0
Flange: 3, 5, 8 (3+5)
Terminal box / motec: 2, 3, 4, 5

Gearbox designs

Basic versions	
Motor efficiency	Standard efficiency Increased efficiency (IE2)
Surface and corrosion protection	No OKS (unpainted, aluminium housing) OKS-S (paint: RAL 7012)
Lubricant	CLP 460 (mineral)
Ventilation	Breather elements for GKR06

Options	
Surface and corrosion protection	OKS-G (primer: grey) OKS-S (special paint according to RAL) OKS-M (special paint according to RAL) OKS-L (special paint according to RAL)
Lubricant	CLP HC 320 (synthetic) CLP HC 220 USDA H1 (synthetic)
Shaft sealing rings	Driven shaft: Viton
Accessories	Rubber buffer for torque plate (GKR 03/04 only) Torque plate on threaded pitch circle Housing foot torque plate (GKR05/06 only) 2nd output shaft end Shrink disc cover Hoseproof hollow shaft cover Mounting set for hollow shaft circlip
Nameplate	Metal nameplate (supplied loose) Adhesive nameplate (supplied loose)

Helical-bevel geared motors

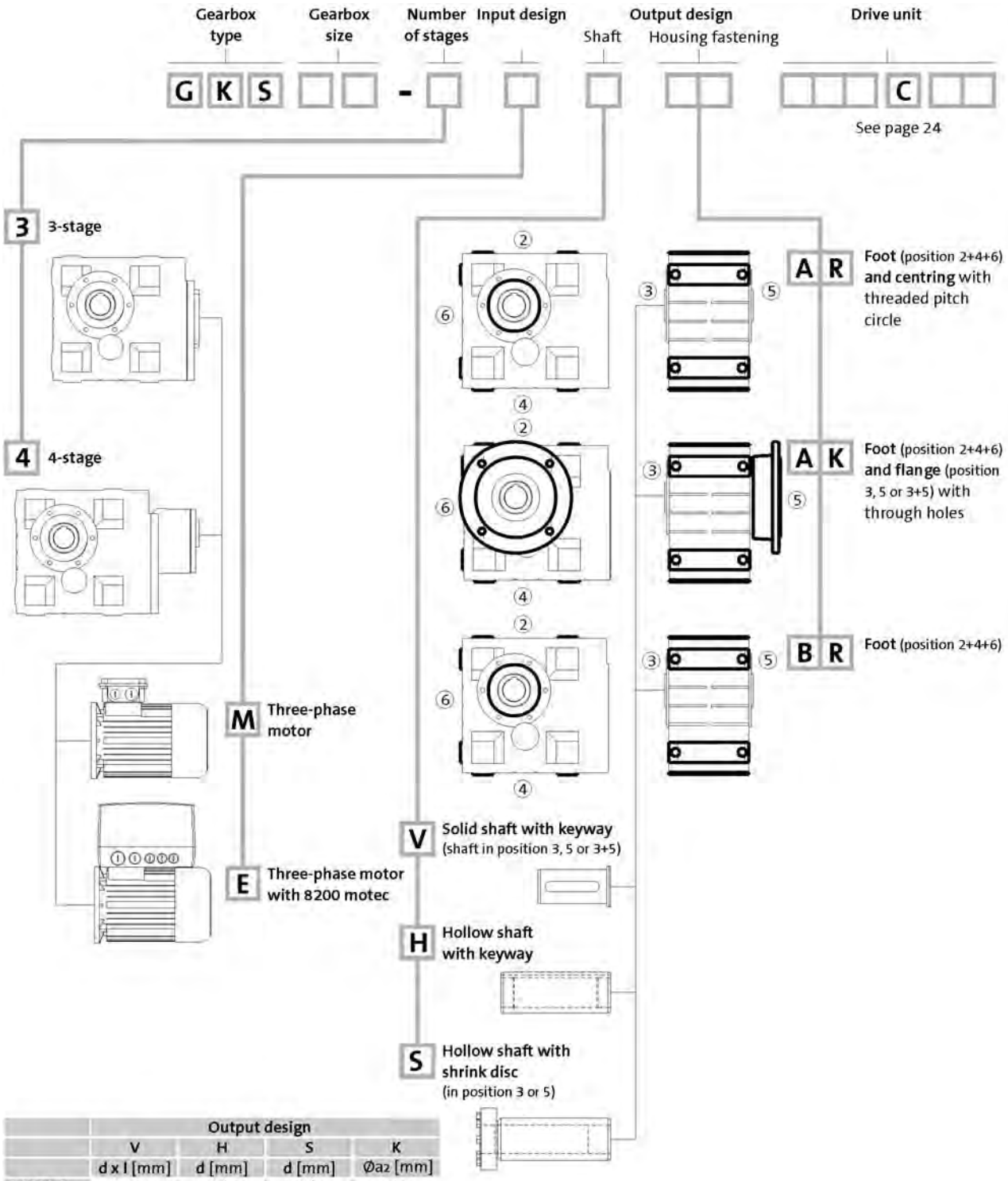

	Output design			
	V	H	S	K
	d x l [mm]	d [mm]	d [mm]	Øaz [mm]
GKS04-3	25x50	25/30	25/30	160
GKS05-3/4	30x60	30/35	35	200
GKS06-3/4	40x80	40/45	40	200[1]/250
GKS07-3/4	50x100	50/55	50	250/300
GKS09-3/4	60x120	60/70	65	350
GKS11-3/4	80x160	70/80	80	400/450
GKS14-3/4	100x200	100	100	450

[1] Only in the case of H and S type of output

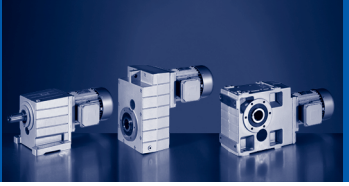

Mounting position (A...F) and position of system blocks (1...6)

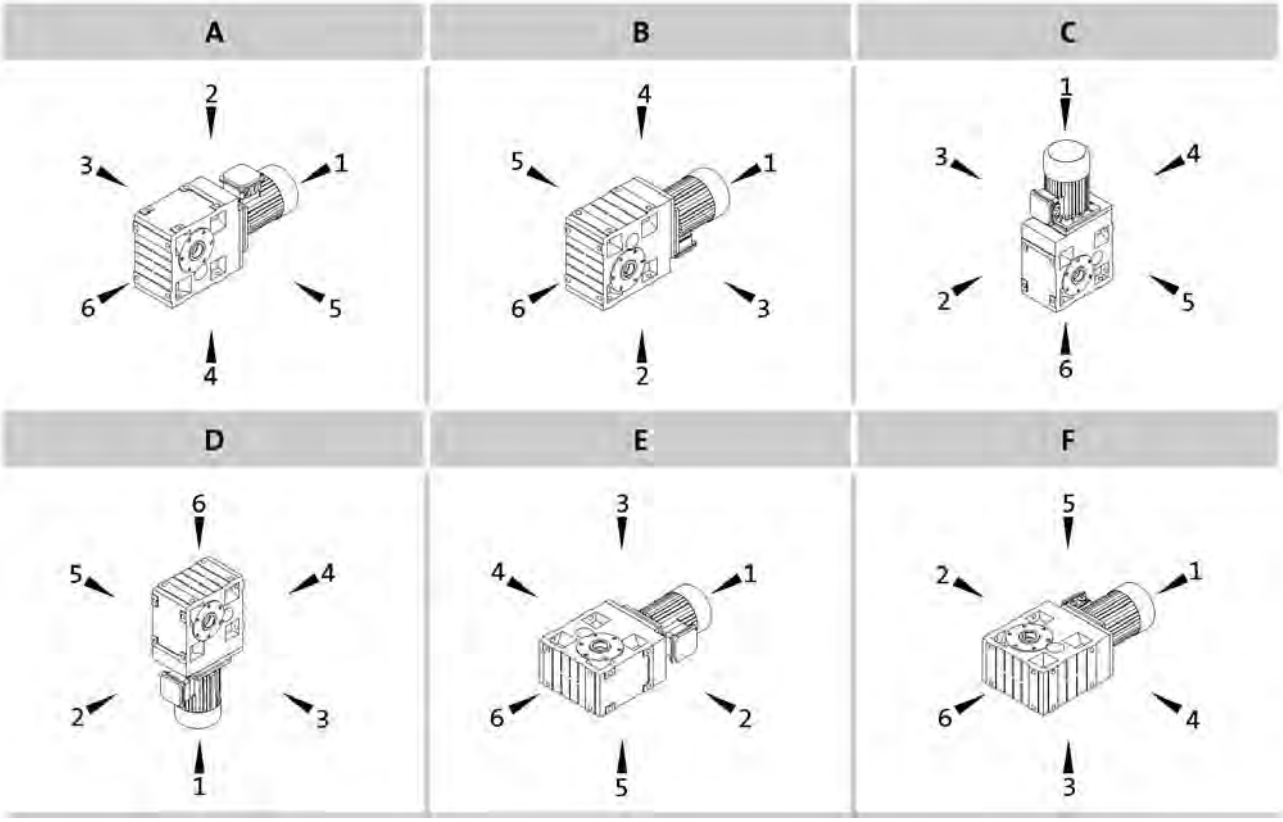

Hollow shaft: 0
Solid shaft: 3, 5, 8 (3+5)
Hollow shaft with shrink disc: 3, 5

Without flange: 0
Flange: 3, 5, 8 (3+5)
Terminal box / motec: 2, 3, 4, 5

Gearbox designs

Basic versions	
Motor efficiency	Standard efficiency Increased efficiency (IE2)
Surface and corrosion protection	OKS-G (primer: grey) OKS-S (paint: RAL 7012)
Lubricant	CLP 460 (mineral)
Ventilation	Oil control plugs for GKS05 ... 14 Breather elements for GKS06 ... 14

Options	
Surface and corrosion protection	OKS-S (special paint according to RAL) OKS-M (special paint according to RAL) OKS-L (special paint according to RAL)
Lubricant	CLP HC 320 (synthetic) CLP HC 220 USDA H1 (synthetic)
Shaft sealing rings	Driven shaft: Viton
Ventilation	Breather elements for GKS05 Compensation reservoir for GKS09 ... 14-3 in mounting position C
Accessories	Torque plate on threaded pitch circle Housing foot torque plate 2nd output shaft end Shrink disc cover Hoseproof hollow shaft cover Mounting set for hollow shaft circlip
Nameplate	Metal nameplate (supplied loose) Adhesive nameplate (supplied loose)

Helical-worm geared motors

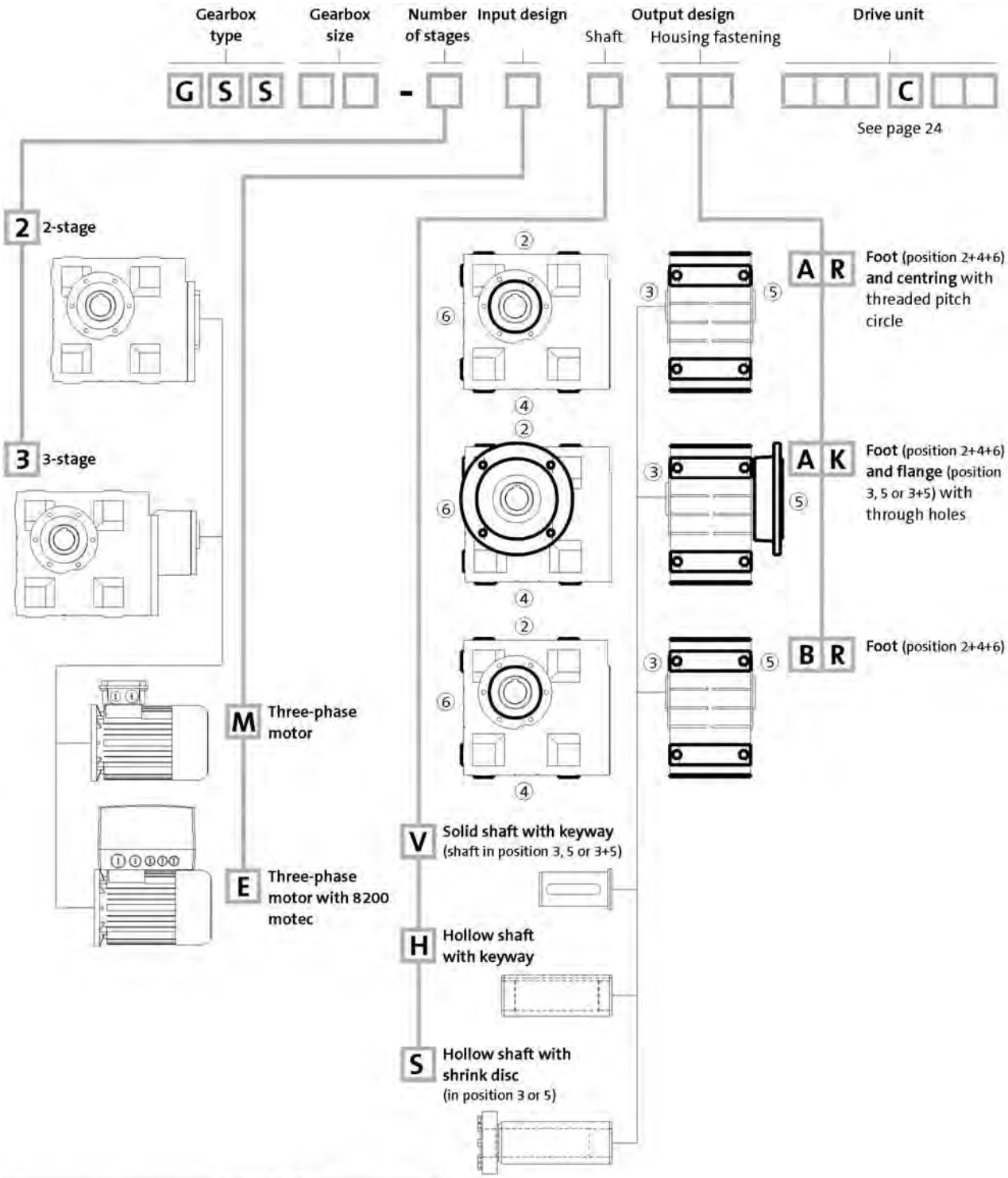

	Output design			
	V	H	S	K
	d x l [mm]	d [mm]	d [mm]	Øa2 [mm]
GSS04-2	25x50	25/30	25/30	160
GSS05-2/3	30x60	30/35	35	200
GSS06-2/3	40x80	40/45	40	200[1]/250
GSS07-2/3	50x100	50/55	50	250/300

[1] Only in the case of H and S type of output

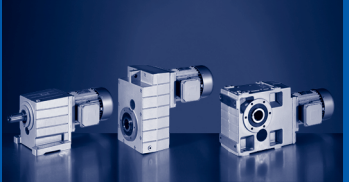

Mounting position (A...F) and position of system blocks (1...6)

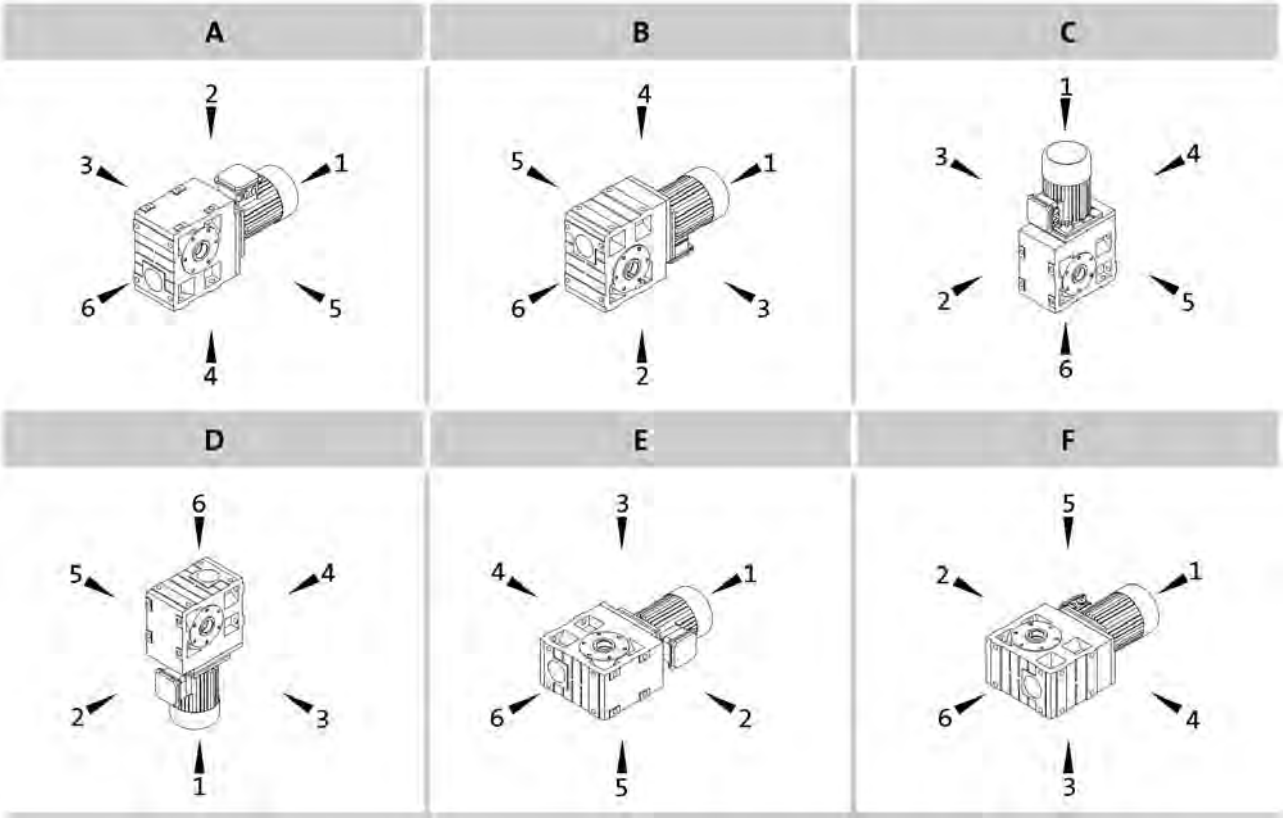

Hollow shaft: 0
Solid shaft: 3, 5, 8 (3+5)
Hollow shaft with shrink disc: 3, 5

Without flange: 0
Flange: 3, 5, 8 (3+5)
Terminal box / motec: 2, 3, 4, 5

Gearbox designs

Basic versions	
Motor efficiency	Standard efficiency Increased efficiency (IE2)
Surface and corrosion protection	OKS-G (primer: grey) OKS-S (paint: RAL 7012)
Lubricant	CLP PG 460 (synthetic)
Ventilation	Oil control plugs for GSS05 ... 07 Breather elements for GSS05 ... 07

Options	
Surface and corrosion protection	OKS-S (special paint according to RAL) OKS-M (special paint according to RAL) OKS-L (special paint according to RAL)
Lubricant	CLP HC 220 USDA H1 (synthetic)
Shaft sealing rings	Driven shaft: Viton
Accessories	Torque plate on threaded pitch circle Housing foot torque plate 2nd output shaft end Shrink disc cover Hoseproof hollow shaft cover Mounting set for hollow shaft circlip
Nameplate	Metal nameplate (supplied loose) Adhesive nameplate (supplied loose)

Three-phase AC motors

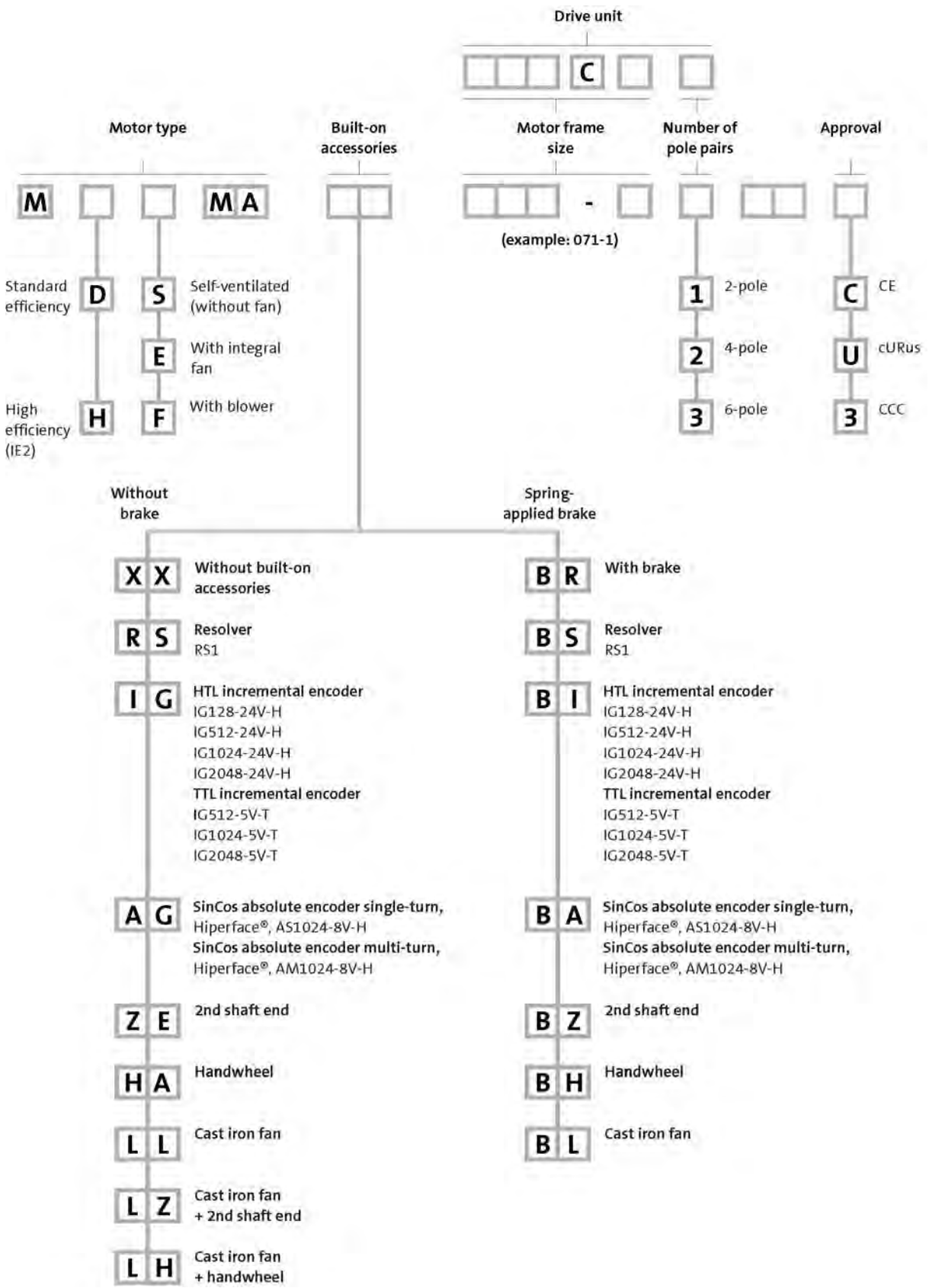

Geared motors

Our quality standards in terms of development, material selection, production and assembly satisfy the strict requirements of a durable drive system. The distinctive design – cubic and compact – integrates seamlessly into the modern industrial landscape.

Geared motor power range
Lenze geared motors are available in a power range from 0.06 to 45 kW.
In the power range from 0.75 to 45 kW the geared motors are also available with the increased motor efficiency of efficiency class IE2.

Operational reliability for use in industrial applications
Even under harsh operating conditions, the reliability of the motors is ensured by
- insulation class F
- IP55
- Scalable packages of measures for surface and corrosion protection

Motor options
- Spring-applied brake
- Blower
- Thermal contact variants
- Connectors
- Feedback systems
- Increased centrifugal mass
- Handwheel
- Second shaft end
- Protection cover
- UL/CSA approval: cURus
- CCC approval

Drive controller compatibility
The double-enamelled wire winding with additional phase insulation provides extremely high dielectric strength and has excellent mechanical resistance.
For decentralised applications, the geared motors are available with a frequency inverter directly mounted on the motor.

Compact
The modular concept and the high power density due to ground gears with optimised teeth profiles make extremely compact designs possible.

Adaptable and compatible
Lenze geared motors can be adapted to almost any drive task, thanks to the variety of input- and output-end designs that are available.

Easy to integrate
Highly functional housings enable Lenze gearboxes to be integrated into the machine environment easily.

Quiet
Optimised geometry of the gear teeth minimises noise generation.

Closely stepped output speed
The large ratio ranges of the gearboxes combined with the small ratio step φ = 1.12 enable the required output speed to be selected with precision.

Reduced backlash
The two-stage basic concept (three-stage helical-bevel gearboxes), low-backlash connections and the high quality of the teeth (due to precision manufacturing) result in reduced output backlash in comparison with similar gearboxes.

Efficient
The comparatively high efficiency of the gearboxes, in conjunction with the efficient three-phase motors of efficiency class IE2, ensure a uniformly efficient drive system. In this way, all the energy saving potential is exploited.

General information about the data provided in this catalogue

Powers, torques and speeds
The powers, torques and speeds specified in this catalogue are rounded values and are valid under the following conditions:

- Operating time/day = 8 h (100% OT)
- Duty class I for up to 10 switching operations/h
- Mounting positions and designs in this catalogue
- Standard lubricant
- T_{amb} = 20 °C for gearboxes,
  T_{amb} = 40 °C for motors (in accordance with EN 60034)
- Site altitude < = 1000 m amsl
- The selection tables provide the permissible mechanical powers and torques. For notes on the thermal power limit, see chapter drive dimensioning.
- The rated power specified for motors and geared motors applies to operating mode S1 (in accordance with EN 60034).

Under different operating conditions, the values obtained may vary from those listed here.
In the case of extreme operating conditions, please consult your Lenze sales office.

$\eta_{100\,\%}$	[%]	Efficiency
$\eta_{75\,\%}$	[%]	Efficiency
η_a		Efficiency
$\eta_{c=1}$		Efficiency
cos φ		Power factor
f_N	[Hz]	Rated frequency
$f_{in,max}$	[Hz]	Max. input frequency
f_{max}	[kHz]	Limit frequency
f_{max}	[kHz]	Max. switching frequency
$F_{ax,max}$	[N]	Max. axial force
$F_{rad,max}$	[N]	Max. radial force
H_{max}	[m]	Site altitude
$I_{in,max}$	[A]	Max. input current
I_{max}	[A]	Max. current
$I_{N,\Delta}$	[A]	Rated current
$I_{N,Y}$	[A]	Rated current
I_a / I_N		Starting current
J	[kgcm²]	Moment of inertia
m	[kg]	Mass
M_2	[Nm]	Output torque
M_a	[Nm]	Starting torque
M_B	[Nm]	Braking torque
M_b	[Nm]	Stalling torque
M_k	[Nm]	Rated torque
M_{max}	[Nm]	Max. torque
M_N	[Nm]	Rated torque
n_2	[r/min]	Output speed
n_{max}	[r/min]	Max. speed
n_N	[r/min]	Rated speed

P_{in}	[kW]	Coil power
P_{max}	[kW]	Max. power input
P_N	[kW]	Rated power
Q_{BW}	[MJ]	Friction energy
Q_E	[KJ]	Maximum switching energy
R	[Ω]	Insulation resistance
$S_{hü}$	[1/h]	Transition operating frequency
T	[°C]	Operating temperature
t_1	[ms]	Engagement time
t_{11}	[ms]	Delay time
t_{12}	[ms]	Rise time
t_2	[ms]	Disengagement time
T_{max}	[°C]	Max. reset temperature
T_{min}	[°C]	Min. reset temperature
$T_{opr,max}$	[°C]	Max. ambient operating temperature
$T_{opr,min}$	[°C]	Min. ambient operating temperature
$t_ü$	[ms]	Overexcitation time
$U_{in,max}$	[V]	Max. input voltage
U_{max}	[V]	Max. mains voltage
U_{min}	[V]	Min. mains voltage
$U_{N,\Delta}$	[V]	Rated voltage
$U_{N,Y}$	[V]	Rated voltage
Z_{ro}	[Ω]	Rotor impedance
Z_{rs}	[Ω]	Impedance
Z_{so}	[Ω]	Stator impedance

CE	Communauté Européenne
CSA	Canadian Standards Association
DIN	Deutsches Institut für Normung e.V.
EMC	Electromagnetic compatibility
EN	European standard
IEC	International Electrotechnical Commission
IM	International Mounting Code
IP	International Protection Code
NEMA	National Electrical Manufacturers Association
UL	Underwriters Laboratory Listed Product

UR	Underwriters Laboratory Recognized Product
VDE	Verband deutscher Elektrotechniker (Association of German Electrical Engineers)
CCC	China Compulsory Certificate
GOST	Certificate for Russian Federation
cURus	Combined certification marks of UL for the USA and Canada
UkrSEPRO	Certificate for Ukraine

We want to be sure that you receive the correct products in good time.

To allow us to achieve this we need:
- Your address and your company data
- Our product key for the individual products in this catalogue
- Your delivery data such as delivery date and delivery address

Ordering procedure
Please use the ordering information checklist to ensure that you provide all the order information required for the various products.

The ordering information checklist, the product key, the basic versions, options, mounting position and position of the system blocks will be found in the General – Product key section.

A list of Lenze sales offices can be found at the end of this catalogue.

☐ **Offer**

Page __ of __

☐ **Order**

Customer No.

Job No.

Fax No.

Sender

Company

Made out by (name)

Street/P.O. Box

Department

P.O. Box, City

Telephone No.

Date Signature

Delivery address (if different)

Street/P.O. Box

Desired delivery date

P.O. Box, City

Dispatching notes

Invoice recipient (if different)

Street/P.O. Box

Postal code, City

Helical geared motors

Customer No. ☐☐☐☐☐☐☐☐

Job No. ☐☐☐☐☐☐☐☐☐☐

Page __

Quantity ☐

Efficiency class ☐ Standard efficiency ☐ High efficiency (IE2)

Rated frequency ☐ 50 Hz ☐ 60 Hz ☐ 87 Hz

Ratio i ☐

GST ☐☐ – ☐ 1 ☐ 2 ☐ 3 ☐ M ☐ E [V] ☐ A ☐ B ☐ C ☐ R ☐ K ☐ L

Motor frame size ☐☐☐ C ☐☐

Solid shaft d = (only with GST03) ☐ mm

Flange a_F = ☐ mm

Mounting position A ☐ B ☐ C ☐ D ☐ E ☐ F ☐

Position of system blocks Terminal box 2 ☐ 3 ☐ 4 ☐ 5 ☐

Surface and corrosion protection

GST03 ☐ Without OKS (unpainted)

GST04 ... 14 ☐ OKS-S colour: RAL 7012 ☐ OKS-G (primed)

Options

Special lubricants ☐ CLP HC 320 (synthetic) ☐ CLP HC 220 USDA H1 (for the food industry)

Surface and corrosion protection ☐ OKS-S (small) ☐ OKS-M (medium) RAL ☐

☐ OKS-L (high) ☐ OKS-G (primed) only with GST03

Output shaft bearing ☐ Reinforced bearing for GST04 ... 09-2

Shaft sealing rings ☐ Viton

Breathing ☐ Breather elements for GST05 ☐ Compensation reservoir in mounting position for GST 09 ... 14-2

Shaft-mounted helical geared motors

Customer No. ☐☐☐☐☐☐☐☐

Job No. ☐☐☐☐☐☐☐☐☐☐

Page __

Quantity ☐

Efficiency class ☐ Standard efficiency ☐ High efficiency (IE2)

Rated frequency ☐ 50 Hz ☐ 60 Hz ☐ 87 Hz

Ratio i ☐

GFL ☐☐ – ☐ 2 ☐ M / ☐ 3 ☐ E

☐ V / ☐ H / ☐ S

☐ A / ☐ B ☐ R / ☐ C ☐ K / ☐ D

Motor frame size ☐☐☐ C ☐☐

Hollow shaft d = ☐ mm

Flange a_2 = ☐ mm

Mounting position A ☐ B ☐ C ☐ D ☐ E ☐ F ☐

Position of system blocks

Shaft/shrink disc 0 ☐ 6 ☐ 1 ☐

Foot 0 ☐ 3 ☐ 4 ☐

Terminal box 2 ☐ 3 ☐ 4 ☐ 5 ☐

Surface and corrosion protection ☐ OKS-S colour: RAL 7012 ☐ OKS-G (primed)

Options

Special lubricants ☐ CLP HC 320 (synthetic) ☐ CLP HC 220 USDA H1 (for the food industry)

Surface and corrosion protection ☐ OKS-S (small) ☐ OKS-M (medium) RAL ☐
☐ OKS-L (high) ☐ OKS-G (primed)

Accessories ☐ Rubber buffer for torque support
☐ Mounting set for hollow-shaft circlip
☐ Hollow shaft cover, hoseproof

Shaft sealing rings ☐ Viton

Breathing ☐ Breather elements for GFL05 ☐ Compensation reservoir in mounting position for GFL09 ... 14-2

Bevel geared motors

Customer No. ☐☐☐☐☐☐☐☐

Job No. ☐☐☐☐☐☐☐☐☐☐

Page __

Quantity ☐

Efficiency class ☐ Standard efficiency ☐ High efficiency (IE2)

Rated frequency ☐ 50 Hz ☐ 60 Hz ☐ 87 Hz

Ratio i ☐

GKR ☐☐ – 2 ☐ M ☐ E ☐ V ☐ H ☐ S ☐ A ☐ B ☐ R ☐ K

Motor frame size ☐☐☐C☐☐

Hollow shaft d = ☐ mm

Flange a_2 = ☐ mm

Mounting position A ☐ B ☐ C ☐ D ☐ E ☐ F ☐

Position of system blocks

Shaft/shrink disc 0 ☐ 3 ☐ 4 ☐ 8 ☐

Flange 0 ☐ 3 ☐ 5 ☐ 8 ☐

Terminal box 2 ☐ 3 ☐ 4 ☐ 5 ☐

Surface and corrosion protection ☐ Without OKS (unpainted)

Options

Special lubricants ☐ CLP HC 320 (synthetic) ☐ CLP HC 220 USDA H1 (for the food industry)

Surface and corrosion protection ☐ OKS-S small) ☐ OKS-M (medium) RAL ☐
☐ OKS-L (high) ☐ OKS-G (primed)

Accessories
☐ Rubber buffer for torque support (only GKR03/04)
☐ Torque support for housing foot (only GKR05/06)
☐ Torque support for threaded pitch circle
☐ 2nd output shaft end
☐ Mounting set for hollow-shaft circlip
☐ Shrink disc cover
☐ Hollow shaft cover, hoseproof

Shaft sealing rings ☐ Viton

Helical-bevel geared motors

Customer No. ☐☐☐☐☐☐☐☐

Job No. ☐☐☐☐☐☐☐☐☐☐

Page __

Quantity ☐

Efficiency class ☐ Standard efficiency ☐ High efficiency (IE2)

Rated frequency ☐ 50 Hz ☐ 60 Hz ☐ 87 Hz

Ratio i ☐

GKS ☐☐ – ☐ 3 ☐ M / ☐ 4 ☐ E ☐ V / ☐ H / ☐ S ☐ A ☐ R / ☐ B ☐ K

Motor frame size ☐☐☐C☐☐

Hollow shaft d = ☐ mm

Flange a_2 = ☐ mm

Mounting position A ☐ B ☐ C ☐ D ☐ E ☐ F ☐

Position of system blocks

Shaft/shrink disc 0 ☐ 3 ☐ 4 ☐ 8 ☐

Flange 0 ☐ 3 ☐ 5 ☐ 8 ☐

Terminal box 2 ☐ 3 ☐ 4 ☐ 5 ☐

Surface and corrosion protection ☐ OKS-S colour: RAL 7012 ☐ OKS-G (primed)

Options

Special lubricants ☐ CLP HC 320 (synthetic) ☐ CLP HC 220 USDA H1 (for the food industry)

Surface and corrosion protection ☐ OKS-S (small) ☐ OKS-M (medium) RAL ☐
☐ OKS-L (high) ☐ OKS-G (primed)

Accessories ☐ Torque support for housing foot ☐ Torque support for threaded pitch circle
☐ 2nd output shaft end ☐ Mounting set for hollow-shaft circlip
☐ Shrink disc cover ☐ Hollow shaft cover, hoseproof

Shaft sealing rings ☐ Viton

Breathing ☐ Breather elements for GKS05 ☐ Compensation reservoir in mounting position for GKS09 ... 14-3

Helical-worm geared motors

Customer No. ☐☐☐☐☐☐☐☐ Job No. ☐☐☐☐☐☐☐☐☐☐ Page __

Quantity ☐

Efficiency class ☐ Standard efficiency ☐ High efficiency (IE2)

Rated frequency ☐ 50 Hz ☐ 60 Hz ☐ 87 Hz

Ratio i ☐

GSS ☐☐ – ☐ 2 ☐ M / ☐ 3 ☐ E ☐ V / ☐ H / ☐ S ☐ A ☐ R / ☐ B ☐ K

Motor frame size ☐☐☐ C ☐☐

Hollow shaft d = ☐ mm Flange a_5 = ☐ mm

Mounting position A ☐ B ☐ C ☐ D ☐ E ☐ F ☐

Position of system blocks

Shaft/shrink disc				Flange				Terminal box			
0	3	4	8	0	3	5	8	2	3	4	5
☐	☐	☐	☐	☐	☐	☐	☐	☐	☐	☐	☐

Surface and corrosion protection ☐ OKS-S colour: RAL 7012 ☐ OKS-G (primed)

Options

Special lubricants ☐ CLP HC 220 USDA H1 (for the food industry)

Surface and corrosion protection ☐ OKS-S (small) ☐ OKS-M (medium) RAL ☐
☐ OKS-L (high) ☐ OKS-G (primed)

Accessories ☐ Torque support for housing foot ☐ Torque support for threaded pitch circle
☐ 2nd output shaft end ☐ Mounting set for hollow-shaft circlip
☐ Shrink disc cover ☐ Hollow shaft cover, hoseproof

Shaft sealing rings ☐ Viton

Breathing ☐ Breather elements for GSS05

Three-phase AC motors options

Customer No. ☐☐☐☐☐☐☐☐ Job No. ☐☐☐☐☐☐☐☐☐☐ Page __

Motor connection

Terminal box
- ☐ with plug-in connector ICN 6-pin. Adhere to permissible rated motor current 20 A!
- ☐ with plug-in connector ICN 8-pin. Adhere to permissible rated motor current 20 A!
- ☐ with plug-in connector HAN10E. Adhere to permissible rated current 16 A!
- ☐ with plug-in connector HAN-Modular. Adhere to permissible rated current 16 / 40 A!

Cable entry: only with M□□MAXX/LL063 ... 132 or terminal box with plug-in connector in position 1 ☐ 2 ☐ 3 ☐ 4 ☐ 5 ☐

Blower

☐ 1~ ☐ 3~

☐ Terminal box with plug-in connector ICN

Terminal box position 2 ☐ 3 ☐ 4 ☐ 5 ☐

Spring-applied brake

Brake version: ☐ Standard ☐ Longlife

Brake size ☐

Characteristic torque ☐ Nm

Rated voltage AC ☐ DC ☐ ☐ V

Rectifier: Only in the case of AC supply voltage

- ☐ Half-wave rectifier
- ☐ Bridge rectifier
- ☐ Bridge/half-wave rectifier (overexcitation)
- ☐ Bridge/half-wave rectifier (holding current reduction)

Brake options: Manual release lever in position 2 ☐ 3 ☐ 4 ☐ 5 ☐

☐ Low-noise version (Standard in the case of brake with speed/position encoder)

Customer No. ☐☐☐☐☐☐☐☐

Job No. ☐☐☐☐☐☐☐☐☐☐

Page __

Speed/position encoder

Resolver ☐ RS1

Incremental encoder HTL ☐ IG128-24V-H ☐ IG512-24V-H ☐ IG1024-24V-H ☐ IG2048-24V-H

Incremental encoder TTL ☐ IG512-5V-T ☐ IG1024-5V-T ☐ IG2048-5V-T

Feedback with ICN connector ☐ IG128-24V-H not possible with plug-in connector!

Motor protection ☐ PTC ☐ KTY 83-110 ☐ KTY 84-130

Approval ☐ UL/CSA approval: cURus ☐ CCC ☐ China Energy Label

Further options

Indication of supply voltage only for motor frame sizes 112C32 to 180C32

☐ Δ; 400V-50Hz; 480V-60Hz ☐ Y/Δ; 400/230V-50Hz; 480/277V-60Hz (-/400V-87Hz possible in operation with frequency inverter)

☐ Protection cover

☐ 2nd shaft end

☐ Handwheel

☐ Increased centrifugal mass

☐ 2nd nameplate (adhesive nameplate/metal nameplate)

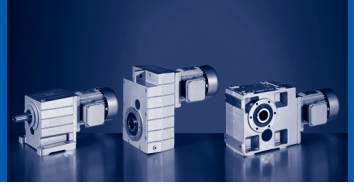

The selection tables shown the available combinations of gearbox type, number of stages, ratio and motor. The following legend indicates the structure of the selection tables.

Gearbox type
Helical gearbox GST
Shaft-mounted helical gearbox GFL
Bevel gearbox GKR
Helical-bevel gearbox GKS
Helical-worm gearbox GSS

Efficiency class of the motor MD□MA (IE1) : Standard efficiency MH□MA (IE2) : High efficiency

GST
GST [Nm] - MD□MA (IE1)

Rated power P_N of the drive motor in relation to the rated frequency

50 Hz: P_N=0.12 kW
60 Hz: P_N=0.145 kW
87 Hz: P_N=0.21 kW

Rated speed n_N of the drive motor

Product key of geared motor

n_N	1425 r/min		1725 r/min		2535 r/min		M_2 [Nm]	i		
f_N	50 Hz		60 Hz		87 Hz					
P_N	0.12 kW		0.145 kW		0.21 kW					
	n_2 [r/min]	c	n_2 [r/min]	c	n_2 [r/min]	c				
	636	5.4	770	5.1	1132	4.5	2	2.240	GST04-1M□□□063C12	216
	499	5	604	4.8	887	4.2	2	2.857	GST04-1M□□□063C12	216

Output speed n_2

The load capacity c of the gearbox c is the ratio of the gearbox's rated torque to the rated torque of the three-phase motor (calculated in respect of its application to the output shaft). c must always be greater than the application factor k determined for the application

Ratio i

Page number for dimensions

Output torque M_2 (constant for all listed frequencies)

$$c = \frac{M_{2,zul}}{M_{1N} \cdot i \cdot \eta_{Getr}} > k$$

Motor voltages

The power values and torques indicated in the selection tables relate to the following motor voltages:

- 50 Hz : Δ 230 V / Y 400 V
- 60 Hz : Δ 277 V / Y 480 V
- 87 Hz : Δ 400 V

Operation at 87 Hz

During 87 Hz operation, the three-phase motor, which is designed for a voltage of Δ 230 V / Y 400 V at 50 Hz, is operated connected to a frequency inverter with a rated voltage of 400 V in a delta connection. Please note that the inverter must be designed for 87 Hz operation.
The advantages compared to operation at 50 Hz are as follows:

- The setting range of the motor is increased by a factor of 1.73.
- Power which is higher by a factor of approximately 1.73 can be obtained from the motor. As a result, a smaller, less expensive motor can, where appropriate, be chosen for the application.
- The efficiency of the motor is also improved.

Thermal power limit

The thermal power limit, defined by the heat balance, limits the permissible gearbox continuous power. It may be less than the mechanical power ratings listed in the selection tables.

The thermal power limit is affected by:

- The churning losses in the lubricant. These are determined by the mounting position and the circumferential speed of the wheels
- The load and the speed
- The ambient conditions: temperature, air circulation, input or dissipation via shafts and the foundation

Please consult your Lenze subsidiary

- if the following input speeds n_1 are exceeded on a continuous basis (continuous is defined as more than 8 h/day):

Motor frame size	Mounting position A, B, E, F	Mounting position C, D
063 ... 100	3000 r/min	3000 r/min
112 ... 132	3000 r/min	1500 r/min
160 ... 225	2000 r/min	1500 r/min

- if the following input speeds n_1 are exceeded:

Motor frame size	Mounting position A, B, E, F	Mounting position C, D
063 ... 100	4000 r/min	3000 r/min
112 ... 132	4000 r/min	2000 r/min
160 ... 225	3000 r/min	1500 r/min

- or if you are using the following gearbox type, size and ratio combinations at an input speed of $n_1 > 1500$ r/min:

Gearbox type	Gearbox size	Ratio i
GST helical gearbox	07, 09, 11, 14	≤ 10
GFL shaft-mounted helical gearbox	07, 09, 11, 14	≤ 16
GKS helical-bevel gearbox	07, 09, 11, 14	≤ 25

Possible ways of extending the application area

- Synthetic lubricant (option)
- Shaft sealing rings made from FP material/Viton (option)
- Reduction in lubricant quantity
- Cooling of the geared motor by means of air convection on the machine/system

Load capacity and application factor

Load capacity c of gearbox
Rated value for the load capacity of Lenze geared motors.
- c is the ratio of the permissible rated torque of the gearbox to the rated torque supplied by the drive component (e.g. the built-in Lenze motor).
- The value of c must always be greater than the value of the application factor k calculated for the application.

Application factor k (according to DIN 3990)
Takes into account the influence of temporally variable loads which are actually present during the anticipated operating time of gearboxes and geared motors.
k is determined by:
- The type of load
- The load intensity
- Temporal influences

Duty class	Load type
I	Smooth operation, small or light jolts
II	Uneven operation, average jolts
III	Uneven operation, severe jolts and/or alternating load

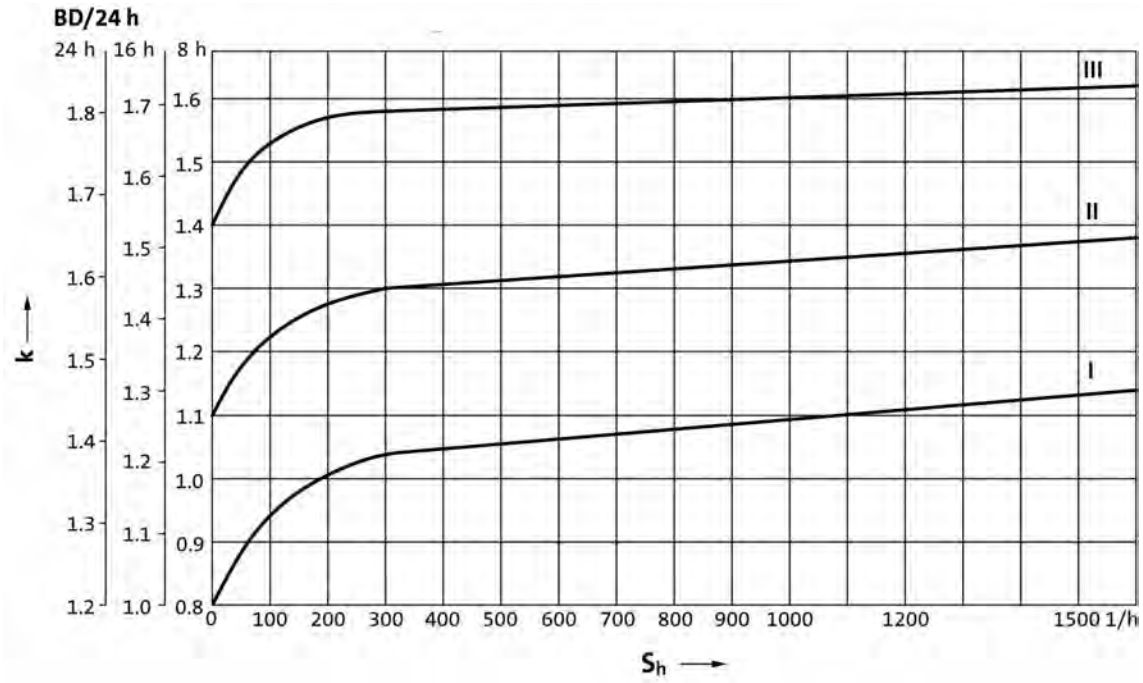

Torque derating at low motor frequencies

Torque reduction depending on motor frame size taking into account the thermal behaviour when operated with a frequency inverter.

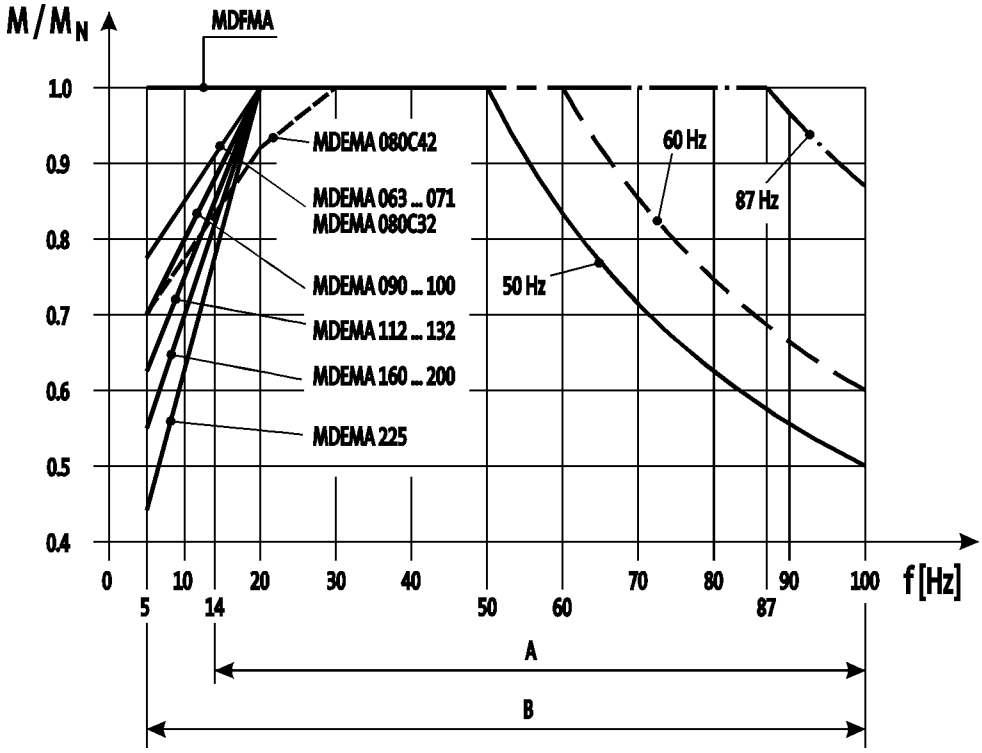

A = Operation with integral fan and brake
B = Operation with integral fan and brake control "Holding current reduction"

You can use the Drive Solution Designer for precise drive dimensioning.

The Drive Solution Designer helps you to carry out a fast and high-quality drive dimensioning.
The software includes well-founded and proven knowledge on drive applications and electro-mechanical drive components.

Please contact your Lenze sales office.

General data

Gearbox type	GST	GFL	GKR	GKS	GSS
Housing					
Design	Cuboid				
Material	Aluminium / cast iron				
Solid shaft					
Design	with keyway to DIN 6885				
Tolerance	k6 (d ≤ 50 mm) m6 (d > 50 mm)				
Material	Tempered steel C45 or 42CrMo4				
Hollow shaft					
Design		H: with keyway S: smooth			
Tolerance		Bore H7			
Material		Tempered steel C45			
Toothed parts					
Design	Optimised tooth flanks and profile geometry Ground tooth flanks				
Material	Case-hardened steel				Case-hardened steel, bronze (worm gear only)
Shaft-hub joint	1st stage/prestage/helical (bevel) gearbox: Friction-type connection Output stage (= 2nd, 3rd or 4th stage): Friction-type or positive-fit connection				
Shaft sealing rings					
Design	With dust lip				
Material	NB / FP				
Bearing					
Design	Ball bearing / tapered-roller bearing depending on size and design				
Lubricants					
Standard	DIN 51502				
Quantities	corresponding to mounting position (see operating instructions)				
Mechanical efficiency					
1-stage gearboxes [$\eta_{c=1}$]	0.98				
2-stage gearboxes [$\eta_{c=1}$]		0.97	0.96		0.62 ... 0.92 [1]
3-stage gearboxes [$\eta_{c=1}$]		0.95		0.95	0.64 ... 0.92 [1]
4-stage gearboxes [$\eta_{c=1}$]				0.93	
Notes					▶ Dependent on transmission ratio ▶ Housing at operating temperature and teeth run in

[1] → 714 - Efficiencies depending on ratio

Ventilation

Gearboxes without ventilation
No ventilation measures are required for the following gearboxes:
- GST03 / 04
- GFL04
- GKR03...05
- GKS04
- GSS04

Gearboxes that may optionally be equipped with ventilation
Special measures are not usually required when using these gearboxes. In borderline cases, e.g. at input speeds > 2000 r/min, we recommend the use of breather elements which we can supply if required.
- GST05
- GFL05
- GKS05

Gearboxes with ventilation
The following gearboxes are supplied with breather elements as standard:
- GST06...14
- GFL06...14
- GKR06
- GKS06...14
- GSS05...07

Special measures for mounting position C (motor on top)
We recommend that an oil compensation reservoir is always used with gearbox sizes G□□09...14 in this mounting position. This reservoir can be purchased as an option. For illustrations and measures according to gearbox type see under Ventilation G□□ [⊗].

It is not required at higher ratios or low input speeds. Please contact Lenze in this event.

Lubricants

Lenze gearboxes and geared motors are ready for operation on delivery and are filled with lubricants that are specific to both the drive and the design. The mounting position and design specified in the order are decisive factors in choosing the volume of lubricant.

The lubricants listed in the lubricant table are approved for use in Lenze drives.

Lubricant table

Designation	CLP 460	CLP PG 460	CLP HC 320	CLP HC 220 USDA H1
Gearbox type	GST / GFL / GKR / GKS	GSS	GST / GFL / GKR / GKS	GST / GFL / GKR / GKS / GSS
Ambient temperature [°C]	0 ... +40	-20 ... +40	-25 ... +50	-20 ... +40
Specification	Mineral based oil with additives	Synthetic-based oil (polyglycol)	Synthetic-based oil (synthetic hydrocarbon / poly-alpha-olefin oil)	
Note		Cannot be mixed with other oil types.		For food processing industry
Changing interval	16000 operating hours not later than after three years (oil temperature 70...80 °C)	25000 operating hours not later than after three years (oil temperature 70...80 °C)		16000 operating hours not later than after three years (oil temperature 70...80 °C)
Fuchs	Fuchs Renolin CLP 460		Fuchs Renolin Unisyn CLP 320	bremer & leguil Cassida Fluid GL 220
Klüber	Klüberoil GEM1-460 N	Klübersynth GH 6-460	Klübersynth GEM4-320 N	Klüberoil 4 UH1-220 N
Shell	Shell Omala 460	Shell Tivela S 460	Shell Omala Oil HD 320	

- Please contact your Lenze office if you are operating in areas with < -20 °C bzw. >ambient temperatures +40°C.
- Caution: when using the lubricant CLP HC 220 on the GSS helical-worm gearbox, the torque M_2 must be reduced to 80 % of the values stated in the catalogue!

Surface and corrosion protection

For optimum protection of geared motors against ambient conditions, the surface and corrosion protection system (OKS) offers tailor-made solutions.

Various surface coatings combined with other protective measures ensure that the geared motors operate reliably even at high air humidity, in outdoor installation or in the presence of atmospheric impurities. Any colour from the RAL Classic collection can be chosen for the top coat. The geared motors are also available unpainted (no surface and corrosion protection).

OKS-G (primed)

Applications
- Dependent on subsequent top coat applied

Measures
- 1K primer (grey)
- Screws zinc-coated
- Stainless breather elements

Optional measures
- Stainless steel rating plate

OKS-S

Applications
- Standard applications
- Indoor installation in heated buildings
- Air humidity up to 90%

Measures
- Surface coating in accordance with corrosivity category C1 (in accordance with EN 12944-2)
- Screws zinc-coated
- Stainless breather elements

Optional measures
- Stainless steel rating plate

OKS-M

Applications
- Indoor installation in unheated buildings
- Outdoor installation in covered, protected area
- Air humidity up to 95 %

Measures
- Surface coating in accordance with corrosivity category C2 (in accordance with EN 12944-2)
- Screws zinc-coated
- Stainless breather elements

Optional measures
- Stainless steel shaft
- Stainless steel rating plate
- Rust-free shrink disc (on request)

OKS-L

Applications
- Outdoor installation
- Air humidity over 95%
- Chemical industrial plants
- Food industry

Measures
- Surface coating in accordance with corrosivity category C3 (in accordance with EN 12944-2)
- Fan cover and B end shield additionally primed
- Cable glands with gaskets
- Corrosion-resistant brake with cover ring, stainless friction plate, and chrome-plated armature plate (on request)
- All screws/screw plugs zinc-coated
- Stainless breather elements
- Threaded holes that are not used are closed by means of plastic plugs

Optional measures
- Sealed recesses on motor (on request)
- Stainless steel shaft
- Stainless steel rating plate
- Rust-free shrink disc (on request)
- Additional priming coat on cast iron fan
- Oil expansion tank and torque plates painted separately and supplied loose

A blower cannot be used in combination with OKS-L.

Structure of surface coating

Surface and corrosion protection system	Without	OKS-G	OKS-S	OKS-M	OKS-L
Corrosivity category according to DIN EN ISO 12944-2			C1	C2	C3
Structure of the surface coating					
Dipping primer					
1K primer					
2K-EP primer					
2K-PUR top coat					
Colour		Grey	Standard: RAL 7012 Optional: According to RAL Classic		

- The gearboxes GST 03 and GKR 03 ... 06 have an aluminium housing, therefore a dipping primer is dispensed with in the case of these gearboxes.

Standards and operating conditions

Enclosure EN 60529			IP55
Energy efficiency class IEC 60034-30 IEC 60034-2-1			IE1 IE2 Methodology for measuring efficiency
Approval Class			CCC cURus [1)] GOST-R UkrSepro
Temperature class IEC/EN 60034-1; utilisation IEC/EN 60034-1; insulation system (enamel-insulated wire)			B F
Min. ambient operating temperature	$T_{opr,min}$	[°C]	-20
Max. ambient temperature for operation With power reduction	$T_{opr,max}$ $T_{opr,max}$	[°C] [°C]	40 60
Site altitude Amsl	H_{max}	[m]	4000

[1)] Motor frame size 225 in preparation.

- Geared three-phase AC motors that do not conform to the ErP Directive do not meet CE requirements and must not be marketed in the European Economic Area. For further information about the ErP Directive and the Lenze products to which it relates, please refer to the brochure called "International efficiency directives for three-phase AC motors".

Options

	MDSMA□□063-02 MDSMA□□063-22	MD□MA□□063-11 MD□MA□□063-12 MD□MA□□063-31 MD□MA□□063-32 MD□MA□□063-42	MD□MA□□071-11 MD□MA□□071-13 MD□MA□□071-31 MD□MA□□071-32 MD□MA□□071-33 MD□MA□□071-42
Cooling type	Naturally ventilated	Integral fan Blower	
Spring-applied brake Design	Standard or LongLife design Reduced or standard braking torque With rectifier With manual release lever Low noise		
Feedback Design	Resolver [1)] Incremental encoder [1)] Absolute value encoder (multi-turn) [1)]		
Thermal sensor Thermal contact	TKO		
Thermal detector	KTY83-110 KTY84-130		
PTC thermistor	PTC		
Motor connection Power connection	Terminal box HAN modular connector HAN10E connector Connector ICN		
Brake connection	Terminal box HAN modular connector HAN10E connector Connector ICN		
Blower connection		Terminal box Connector ICN	
Feedback connection	Terminal box Connector ICN		
Temperature sensor connection	Terminal box KTY at connector in the feedback connection TKO or PTC at connector in the power connection		
Shaft bearings Position of the locating bearing	Non-drive end		
Bearing type	Deep-groove ball bearing with high-temperature resistant grease, 2 sealing discs or cover plates		
Colour	Primed Paint in various corrosion-protection designs in accordance with RAL colours Not coated		
Further options	Protection cover		Increased centrifugal mass Protection cover 2nd shaft end Handwheel [1)]

[1)] With 2-pole motors not available.

	MD□MA□□080-11 MD□MA□□080-13 MD□MA□□080-31 M□□MA□□080-32 M□□MA□□080-42 MD□MA□□080-33	MD□MA□□090-11 M□□MA□□090-12 MD□MA□□090-31 M□□MA□□090-32	M□□MA□□100-12 MD□MA□□100-31 M□□MA□□100-32 MD□MA□□100-41
Cooling type	Integral fan Blower		
Spring-applied brake Design	Standard or LongLife design Reduced, standard or increased braking torque With rectifier With manual release lever Low noise		
Feedback Design	Resolver [1)] Incremental encoder [1)] Absolute value encoder (multi-turn) [1)]		
Thermal sensor Thermal contact	TKO		
Thermal detector	KTY83-110 KTY84-130		
PTC thermistor	PTC		
Motor connection Power connection	Terminal box HAN modular connector HAN10E connector Connector ICN		
Brake connection	Terminal box HAN modular connector HAN10E connector Connector ICN		
Blower connection	Terminal box Connector ICN		
Feedback connection	Terminal box Connector ICN		
Temperature sensor connection	Terminal box KTY at connector in the feedback connection TKO or PTC at connector in the power connection		
Shaft bearings Position of the locating bearing	Non-drive end		
Bearing type	Deep-groove ball bearing with high-temperature resistant grease, 2 sealing discs or cover plates		
Colour	Primed Paint in various corrosion-protection designs in accordance with RAL colours Not coated		
Further options	Increased centrifugal mass Protection cover 2nd shaft end Handwheel [1)]		

[1)] With 2-pole motors not available.

	M□□MA□□112-22 MD□MA□□112-31 M□□MA□□112-32 MD□MA□□112-41	M□□MA□□132-12 MD□MA□□132-21 M□□MA□□132-22 M□□MA□□132-32
Cooling type	Integral fan Blower	
Spring-applied brake Design	Standard design Reduced, standard or increased braking torque With rectifier With manual release lever Low noise	
Feedback Design	Resolver [1)] Incremental encoder [1)] Absolute value encoder (multi-turn) [1)]	
Thermal sensor Thermal contact	TKO	
Thermal detector	KTY83-110 KTY84-130 KTY	
PTC thermistor	PTC	
Motor connection Power connection	Terminal box HAN modular connector HAN10E connector Connector ICN	Terminal box HAN modular connector Connector ICN
Brake connection	Terminal box HAN modular connector HAN10E connector Connector ICN	Terminal box HAN modular connector Connector ICN
Blower connection		
Feedback connection	Terminal box Connector ICN	
Temperature sensor connection	Terminal box KTY at connector in the feedback connection TKO or PTC at connector in the power connection	
Shaft bearings Position of the locating bearing	Non-drive end	
Bearing type	Deep-groove ball bearing with high-temperature resistant grease, 2 sealing discs or cover plates	
Colour	Primed Paint in various corrosion-protection designs in accordance with RAL colours Not coated	
Further options	Increased centrifugal mass Protection cover 2nd shaft end Handwheel [1)]	

[1)] With 2-pole motors not available.

	M□□MA□□160-22 M□□MA□□160-32	M□□MA□□180-12 M□□MA□□180-32 M□□MA□□180-42	M□□MA□□225-12 M□□MA□□225-22
Cooling type	Integral fan Blower		
Spring-applied brake Design	Standard design Reduced, standard or increased braking torque With rectifier With manual release lever Low noise		
Feedback Design	Resolver Incremental encoder Absolute value encoder (multi-turn)		
Thermal sensor Thermal contact	TKO		
Thermal detector	KTY83-110 KTY84-130		
PTC thermistor	PTC		
Motor connection Power connection	Terminal box HAN modular connector	Terminal box	
Brake connection	Terminal box HAN modular connector	Terminal box	
Blower connection	Terminal box Connector ICN		
Feedback connection	Terminal box Connector ICN		
Temperature sensor connection	Terminal box KTY at connector in the feedback connection TKO or PTC at connector in the power connection	Terminal box	
Shaft bearings Position of the locating bearing	Drive end		
Bearing type	Deep-groove ball bearing with high-temperature resistant grease, 2 sealing discs or cover plates		
Colour	Primed Paint in various corrosion-protection designs in accordance with RAL colours Not coated		
Further options	Protection cover		

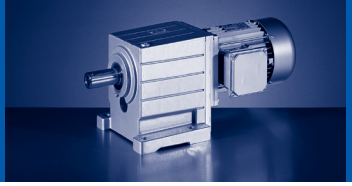

Permissible radial and axial forces at output

Permissible radial force
$F_{rad,per} = \min(f_w \times f_\alpha \times F_{rad,max}\ ;\ f_w \times F_{rad,max}$ at $n_2 \leq 50$ r/min)

Permissible axial force
$F_{ax,per} = F_{ax,max}$ if $F_{rad} = 0$

If F_{rad} **and** $F_{ax} \neq 0$, please contact Lenze.

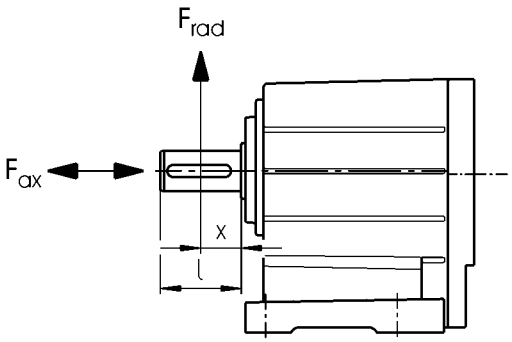

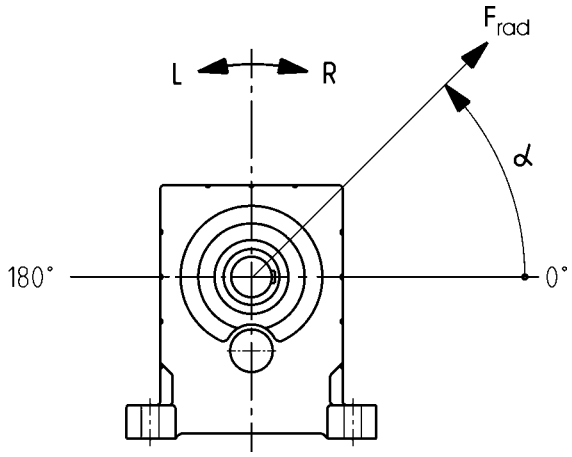

Effective direction factor f_α at output shaft

GST03-2

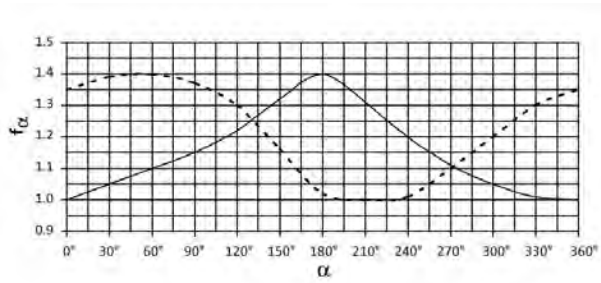

GST04...09-1

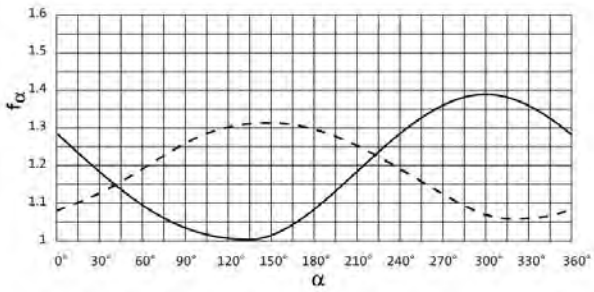

GST04...09-2, 3

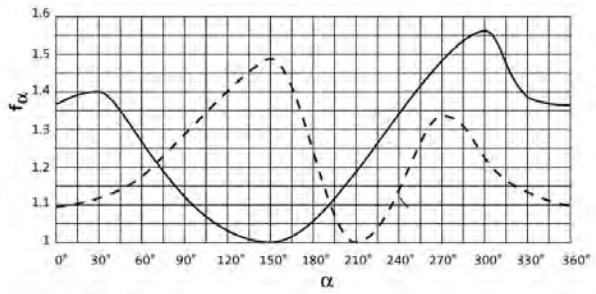

GST11...14-2, 3

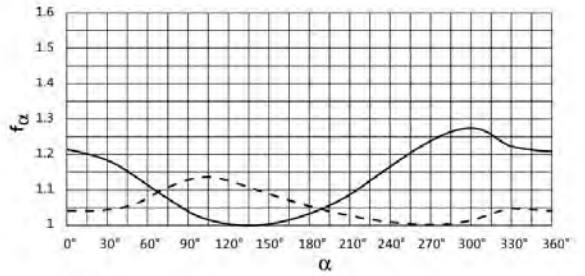

——— Direction of rotation R
— — — Direction of rotation L

Additional load factor f_w at output shaft

GST03-2	GST04...09-1, 2, 3
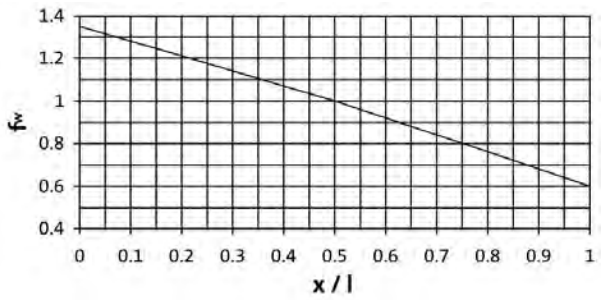	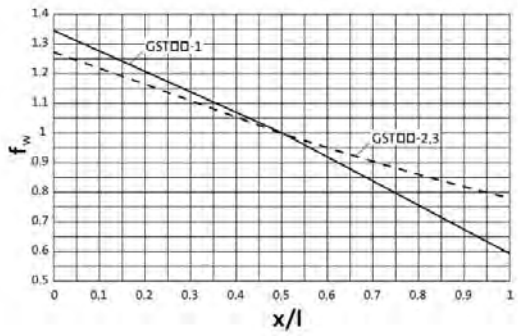

GST□□-1

Size	n_2 [r/min]								
Gearbox	2500	1600	1000	600	400	200	125	80	≤50
	Max. radial force, Solid shaft								
	$F_{rad,max}$	$F_{rad,max}$	$F_{rad,max}$	$F_{rad,max}$	$F_{rad,max}$	$F_{rad,max}$	$F_{rad,max}$	$F_{rad,max}$	$F_{rad,max}$
	[N]	[N]	[N]	[N]	[N]	[N]	[N]	[N]	[N]
GST04	100	180	440	600	850	1050	1050	1050	1050
GST05	100	250	550	750	1400	2000	2300	2300	2300
GST06	200	600	800	800	1100	2200	2900	3500	3500
GST07	700	1000	1200	1300	1900	3000	3900	4700	5300
GST09	1750	2200	2500	2500	3500	6200	7900	9000	9500
	Max. axial force, Solid shaft								
	$F_{ax,max}$	$F_{ax,max}$	$F_{ax,max}$	$F_{ax,max}$	$F_{ax,max}$	$F_{ax,max}$	$F_{ax,max}$	$F_{ax,max}$	$F_{ax,max}$
	[N]	[N]	[N]	[N]	[N]	[N]	[N]	[N]	[N]
GST04	600	800	1000	1300	1400	1400	1400	1400	1400
GST05	800	1100	1400	2000	2000	2000	2000	2000	2000
GST06	900	1200	1500	2000	2500	2500	2500	2500	2500
GST07	1200	1600	2000	2700	3300	3700	3700	3700	3700
GST09	2500	3400	4300	5700	6800	7000	7000	7000	7000

- Application of force F_{rad}: centre of shaft journal (x = l/2)
- $F_{ax,max}$ only valid with F_{rad} = 0

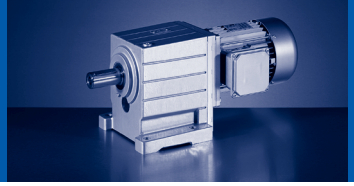

GST□□-2 / 3 with standard bearings

Size	n_2 [r/min]									
Gearbox	1000	630	400	250	160	100	63	40	25	≤16
	Max. radial force, Solid shaft									
	$F_{rad,max}$	$F_{rad,max}$	$F_{rad,max}$	$F_{rad,max}$	$F_{rad,max}$	$F_{rad,max}$	$F_{rad,max}$	$F_{rad,max}$	$F_{rad,max}$	$F_{rad,max}$
	[N]	[N]	[N]	[N]	[N]	[N]	[N]	[N]	[N]	[N]
GST03	100	300	630	710	800	920	1100	1400	1500	1500
GST04	730	950	1250	1450	1700	2100	2500	2650	2650	2650
GST05	1150	1500	1950	2200	2600	3000	3500	3800	3900	3900
GST06	140	750	2350	2600	3100	3600	4300	4350	4350	4350
GST07	140	2050	3400	3800	4500	5400	6400	7600	9100	9500
GST09	1500	1950	6800	7600	9400	11500	11500	11500	11500	11500
GST11	11500	14400	17000	19000	21000	21000	21000	21000	21000	21000
GST14	16600	20700	24000	27000	31000	36000	39000	40000	40000	40000
	Max. axial force, Solid shaft									
	$F_{ax,max}$	$F_{ax,max}$	$F_{ax,max}$	$F_{ax,max}$	$F_{ax,max}$	$F_{ax,max}$	$F_{ax,max}$	$F_{ax,max}$	$F_{ax,max}$	$F_{ax,max}$
	[N]	[N]	[N]	[N]	[N]	[N]	[N]	[N]	[N]	[N]
GST03	300	400	600	700	800	900	1000	1000	1000	1000
GST04	600	800	1100	1300	1650	2000	2000	2000	2000	2000
GST05	1200	1600	2000	2300	2650	3100	3600	3600	3600	3600
GST06	500	600	850	900	1250	1800	2600	3600	4800	4800
GST07	1100	1500	1900	2200	2900	3900	5300	7000	7000	7000
GST09	1300	1800	2300	2800	4000	5600	8100	11000	12000	12000
GST11	5700	7600	9500	10000	11000	14000	16000	16000	16000	16000
GST14	9000	12000	15000	16000	18000	20000	20000	20000	20000	20000

- Application of force F_{rad}: centre of shaft journal (x = l/2)
- $F_{ax,max}$ only valid with F_{rad} = 0

GST□□-2 / 3 with reinforced bearing

Size	n_2 [r/min]									
Gearbox	1000	630	400	250	160	100	63	40	25	≤16
	Max. radial force, Solid shaft (reinforced bearings))									
	$F_{rad,max}$	$F_{rad,max}$	$F_{rad,max}$	$F_{rad,max}$	$F_{rad,max}$	$F_{rad,max}$	$F_{rad,max}$	$F_{rad,max}$	$F_{rad,max}$	$F_{rad,max}$
	[N]	[N]	[N]	[N]	[N]	[N]	[N]	[N]	[N]	[N]
GST04	1900	2350	2850	3150	3550	3750	3750	3750	3750	3750
GST05	3350	3950	4900	5400	5400	5400	5400	5400	5400	5400
GST06	4250	5100	6300	7000	7700	7700	7700	7700	7700	7700
GST07	5650	6850	8500	9500	10500	12500	13000	13000	13000	13000
GST09	11300	14000	16500	17000	17000	17000	17000	17000	17000	17000
	Max. axial force, Solid shaft (reinforced bearings))									
	$F_{ax,max}$	$F_{ax,max}$	$F_{ax,max}$	$F_{ax,max}$	$F_{ax,max}$	$F_{ax,max}$	$F_{ax,max}$	$F_{ax,max}$	$F_{ax,max}$	$F_{ax,max}$
	[N]	[N]	[N]	[N]	[N]	[N]	[N]	[N]	[N]	[N]
GST04	1000	1300	1700	1900	2200	2500	2500	2500	2500	2500
GST05	2100	2800	3600	3900	4300	4500	4500	4500	4500	4500
GST06	2100	2800	3500	3600	4200	4900	5700	5700	5700	5700
GST07	3300	4400	5500	6100	7100	8300	9000	9000	9000	9000
GST09	4800	6400	8000	9000	10500	12500	14000	14000	14000	14000

- Application of force F_{rad}: centre of shaft journal (x = l/2)
- $F_{ax,max}$ only valid with F_{rad} = 0

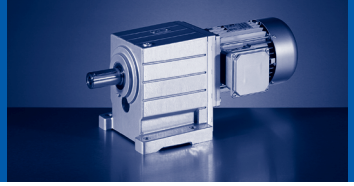

Output backlash in angular minutes

► Backlash φ depending on ratio i

GST04...09-1

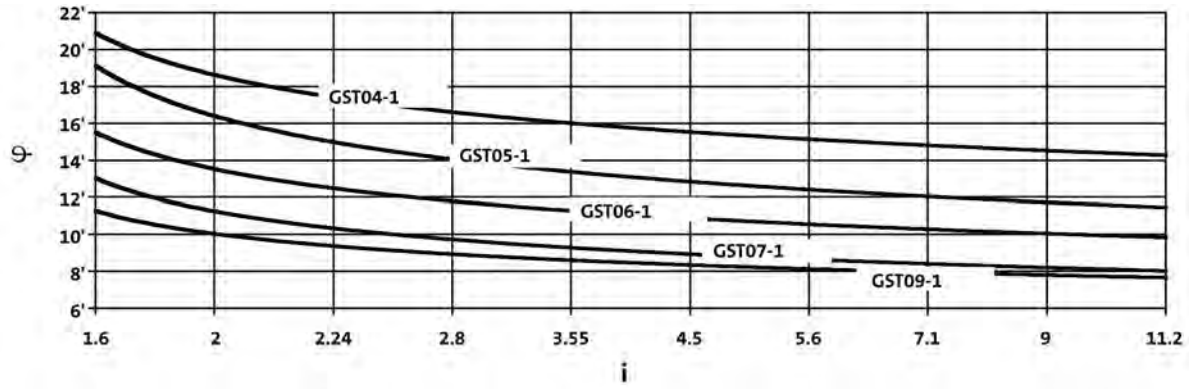

GST03-2

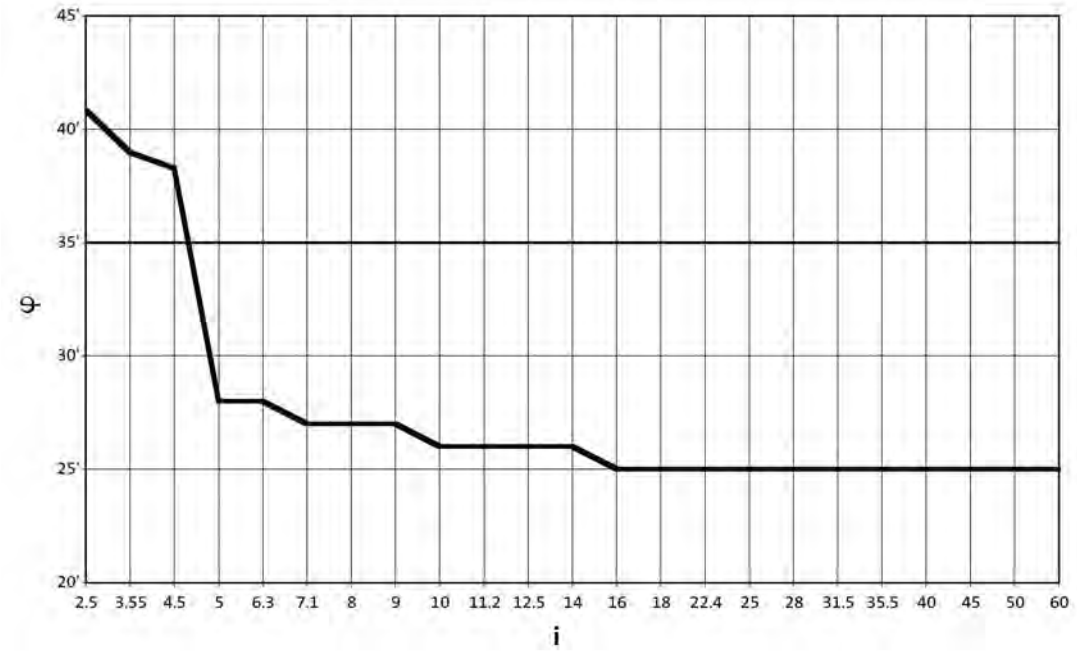

► Backlash φ depending on ratio i

GST04...14-2

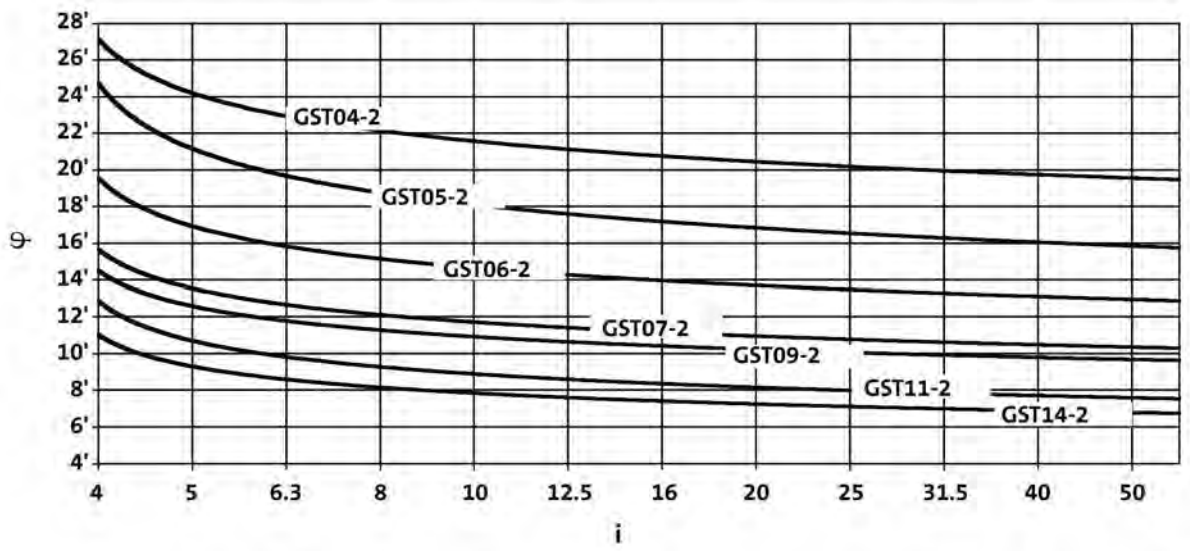

GST05...14-3

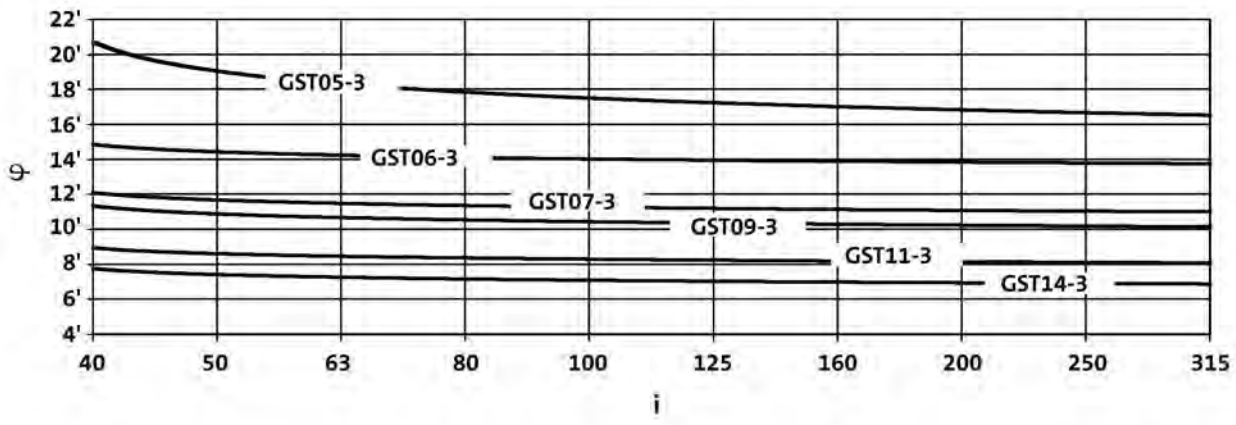

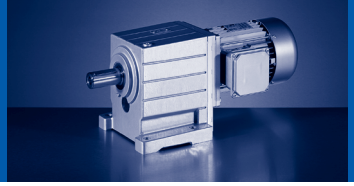

GST□□-1

► Moment of inertia (J) depending on ratio i

Gearbox			GST04
1.600	J	[kgcm²]	0.267
2.048	J	[kgcm²]	0.194
2.240	J	[kgcm²]	0.172
2.857	J	[kgcm²]	0.126
3.500	J	[kgcm²]	0.099
4.400	J	[kgcm²]	0.067
5.667	J	[kgcm²]	0.047
7.182	J	[kgcm²]	0.031
9.000	J	[kgcm²]	0.022
11.857	J	[kgcm²]	0.013

Gearbox			GST05
1.600	J	[kgcm²]	0.760
2.048	J	[kgcm²]	0.549
2.240	J	[kgcm²]	0.480
2.857	J	[kgcm²]	0.354
3.500	J	[kgcm²]	0.272
4.556	J	[kgcm²]	0.175
5.667	J	[kgcm²]	0.129
7.333	J	[kgcm²]	0.062
8.900	J	[kgcm²]	0.060
11.375	J	[kgcm²]	0.039

Gearbox			GST06
1.600	J	[kgcm²]	2.010
2.048	J	[kgcm²]	1.460
2.240	J	[kgcm²]	1.270
2.857	J	[kgcm²]	0.969
3.500	J	[kgcm²]	0.736
4.556	J	[kgcm²]	0.481
5.667	J	[kgcm²]	0.359
7.333	J	[kgcm²]	0.226
8.900	J	[kgcm²]	0.167
11.250	J	[kgcm²]	0.109

Gearbox			GST07
1.625	J	[kgcm²]	6.120
2.000	J	[kgcm²]	4.780
2.240	J	[kgcm²]	4.020
2.857	J	[kgcm²]	2.690
3.500	J	[kgcm²]	2.150
4.556	J	[kgcm²]	1.370
5.583	J	[kgcm²]	1.050
7.333	J	[kgcm²]	0.664
8.900	J	[kgcm²]	0.494
11.250	J	[kgcm²]	0.320

Gearbox			GST09
1.560	J	[kgcm²]	22.200
2.048	J	[kgcm²]	15.600
2.333	J	[kgcm²]	12.200
2.810	J	[kgcm²]	9.580
3.444	J	[kgcm²]	7.300
4.667	J	[kgcm²]	4.600
5.667	J	[kgcm²]	3.510
7.333	J	[kgcm²]	2.260
8.900	J	[kgcm²]	1.660
11.250	J	[kgcm²]	1.110

► The moments of inertia relate to the drive shaft of the gearbox.
► The total moment of inertia is calculated by adding the values of gearbox, motor and accessories.

GST□□-2

► Moment of inertia (J) depending on ratio i

Gearbox			GST03
2.597	J	[kgcm²]	0.260
3.413	J	[kgcm²]	0.169
4.368	J	[kgcm²]	0.117
5.312	J	[kgcm²]	0.179
5.965	J	[kgcm²]	0.173
6.982	J	[kgcm²]	0.122
7.840	J	[kgcm²]	0.119
8.935	J	[kgcm²]	0.089
10.033	J	[kgcm²]	0.086
11.429	J	[kgcm²]	0.059
12.833	J	[kgcm²]	0.057
14.836	J	[kgcm²]	0.041
16.660	J	[kgcm²]	0.040
19.013	J	[kgcm²]	0.028
21.350	J	[kgcm²]	0.027
24.595	J	[kgcm²]	0.019
27.618	J	[kgcm²]	0.019
32.000	J	[kgcm²]	0.012
35.933	J	[kgcm²]	0.012
41.455	J	[kgcm²]	0.008
46.550	J	[kgcm²]	0.008
52.909	J	[kgcm²]	0.005
59.413	J	[kgcm²]	0.005

Gearbox			GST04
2.956	J	[kgcm²]	0.337
3.333	J	[kgcm²]	0.324
4.053	J	[kgcm²]	0.312
4.571	J	[kgcm²]	0.300
5.187	J	[kgcm²]	0.222
5.850	J	[kgcm²]	0.215
6.400	J	[kgcm²]	0.189
7.040	J	[kgcm²]	0.264
8.000	J	[kgcm²]	0.257
9.010	J	[kgcm²]	0.193
9.856	J	[kgcm²]	0.170
11.200	J	[kgcm²]	0.166
12.571	J	[kgcm²]	0.126
14.286	J	[kgcm²]	0.123
15.400	J	[kgcm²]	0.098
17.500	J	[kgcm²]	0.097
19.360	J	[kgcm²]	0.063
22.000	J	[kgcm²]	0.062
24.933	J	[kgcm²]	0.044
28.333	J	[kgcm²]	0.043
31.600	J	[kgcm²]	0.030
35.909	J	[kgcm²]	0.030
39.600	J	[kgcm²]	0.021
45.000	J	[kgcm²]	0.021
52.171	J	[kgcm²]	0.013
59.286	J	[kgcm²]	0.013

► The moments of inertia relate to the drive shaft of the gearbox.
► The total moment of inertia is calculated by adding the values of gearbox, motor and accessories.

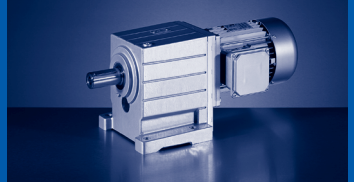

► Moment of inertia (J) depending on ratio i

Gearbox			GST05
2.956	J	[kgcm²]	0.986
3.333	J	[kgcm²]	0.944
4.053	J	[kgcm²]	0.903
4.571	J	[kgcm²]	0.864
5.187	J	[kgcm²]	0.637
5.850	J	[kgcm²]	0.613
6.400	J	[kgcm²]	0.533
7.238	J	[kgcm²]	0.400
8.163	J	[kgcm²]	0.388
9.010	J	[kgcm²]	0.543
10.000	J	[kgcm²]	0.300
11.200	J	[kgcm²]	0.462
13.016	J	[kgcm²]	0.178
14.356	J	[kgcm²]	0.131
16.190	J	[kgcm²]	0.128
17.500	J	[kgcm²]	0.271
20.044	J	[kgcm²]	0.164
22.778	J	[kgcm²]	0.161
24.933	J	[kgcm²]	0.119
28.333	J	[kgcm²]	0.117
32.267	J	[kgcm²]	0.079
36.667	J	[kgcm²]	0.078
39.160	J	[kgcm²]	0.058
44.500	J	[kgcm²]	0.057
50.050	J	[kgcm²]	0.039
56.875	J	[kgcm²]	0.038

Gearbox			GST06
3.033	J	[kgcm²]	2.720
3.333	J	[kgcm²]	2.610
4.160	J	[kgcm²]	2.510
4.571	J	[kgcm²]	2.410
5.324	J	[kgcm²]	1.760
5.850	J	[kgcm²]	1.710
6.400	J	[kgcm²]	1.470
7.040	J	[kgcm²]	2.070
8.163	J	[kgcm²]	1.060
9.010	J	[kgcm²]	1.500
10.000	J	[kgcm²]	0.820
11.200	J	[kgcm²]	1.260
12.571	J	[kgcm²]	0.955
14.286	J	[kgcm²]	0.932
15.400	J	[kgcm²]	0.748
17.500	J	[kgcm²]	0.733
20.044	J	[kgcm²]	0.457
22.778	J	[kgcm²]	0.450
24.933	J	[kgcm²]	0.332
28.333	J	[kgcm²]	0.326
32.267	J	[kgcm²]	0.221
36.667	J	[kgcm²]	0.218
39.160	J	[kgcm²]	0.162
44.500	J	[kgcm²]	0.160
49.500	J	[kgcm²]	0.110
56.250	J	[kgcm²]	0.108

► The moments of inertia relate to the drive shaft of the gearbox.
► The total moment of inertia is calculated by adding the values of gearbox, motor and accessories.

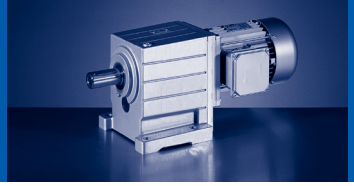

► Moment of inertia (J) depending on ratio i

Gearbox			GST07
3.048	J	[kgcm²]	8.200
3.350	J	[kgcm²]	7.920
4.225	J	[kgcm²]	7.650
4.643	J	[kgcm²]	7.390
5.200	J	[kgcm²]	5.640
5.714	J	[kgcm²]	5.460
6.400	J	[kgcm²]	4.490
7.150	J	[kgcm²]	6.270
8.125	J	[kgcm²]	6.040
8.800	J	[kgcm²]	4.730
9.856	J	[kgcm²]	3.900
11.200	J	[kgcm²]	3.780
12.571	J	[kgcm²]	2.860
14.286	J	[kgcm²]	2.790
15.400	J	[kgcm²]	2.260
17.500	J	[kgcm²]	2.210
20.044	J	[kgcm²]	1.380
22.778	J	[kgcm²]	1.350
24.567	J	[kgcm²]	1.020
27.917	J	[kgcm²]	1.010
32.267	J	[kgcm²]	0.664
36.667	J	[kgcm²]	0.653
39.160	J	[kgcm²]	0.487
44.500	J	[kgcm²]	0.479
49.500	J	[kgcm²]	0.330
56.250	J	[kgcm²]	0.325

Gearbox			GST09
4.056	J	[kgcm²]	27.000
4.457	J	[kgcm²]	25.900
5.324	J	[kgcm²]	18.100
5.850	J	[kgcm²]	17.500
6.667	J	[kgcm²]	14.200
7.305	J	[kgcm²]	11.300
8.027	J	[kgcm²]	11.000
9.010	J	[kgcm²]	15.200
10.267	J	[kgcm²]	12.400
11.667	J	[kgcm²]	12.100
12.362	J	[kgcm²]	9.790
14.048	J	[kgcm²]	9.530
15.156	J	[kgcm²]	7.650
17.222	J	[kgcm²]	7.490
20.533	J	[kgcm²]	4.500
23.333	J	[kgcm²]	4.410
24.933	J	[kgcm²]	3.380
28.333	J	[kgcm²]	3.320
32.267	J	[kgcm²]	2.250
36.667	J	[kgcm²]	2.210
39.160	J	[kgcm²]	1.640
44.500	J	[kgcm²]	1.620
49.500	J	[kgcm²]	1.120
56.250	J	[kgcm²]	1.100

► The moments of inertia relate to the drive shaft of the gearbox.
► The total moment of inertia is calculated by adding the values of gearbox, motor and accessories.

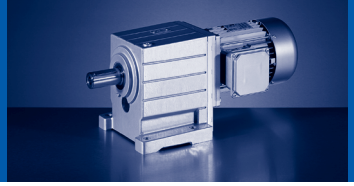

► Moment of inertia (J) depending on ratio i

Gearbox			GST11
4.056	J	[kgcm²]	82.200
4.457	J	[kgcm²]	79.000
5.324	J	[kgcm²]	55.400
5.850	J	[kgcm²]	53.500
6.400	J	[kgcm²]	45.700
6.864	J	[kgcm²]	67.500
7.800	J	[kgcm²]	65.100
9.010	J	[kgcm²]	46.800
9.856	J	[kgcm²]	40.200
11.200	J	[kgcm²]	39.000
12.571	J	[kgcm²]	29.400
14.286	J	[kgcm²]	28.700
15.400	J	[kgcm²]	23.000
17.500	J	[kgcm²]	22.500
20.289	J	[kgcm²]	14.300
23.056	J	[kgcm²]	14.100
24.933	J	[kgcm²]	10.600
28.333	J	[kgcm²]	10.400
32.267	J	[kgcm²]	7.040
36.667	J	[kgcm²]	6.930
39.160	J	[kgcm²]	5.150
44.500	J	[kgcm²]	5.080
49.500	J	[kgcm²]	3.520
56.250	J	[kgcm²]	3.440

Gearbox			GST14
4.225	J	[kgcm²]	226.000
4.643	J	[kgcm²]	216.000
5.200	J	[kgcm²]	168.000
5.714	J	[kgcm²]	161.000
6.286	J	[kgcm²]	141.000
7.150	J	[kgcm²]	183.000
8.027	J	[kgcm²]	100.000
8.800	J	[kgcm²]	139.000
9.841	J	[kgcm²]	75.100
11.000	J	[kgcm²]	119.000
12.362	J	[kgcm²]	89.000
14.048	J	[kgcm²]	86.600
15.156	J	[kgcm²]	67.600
17.222	J	[kgcm²]	66.000
20.044	J	[kgcm²]	45.800
22.778	J	[kgcm²]	44.900
24.567	J	[kgcm²]	33.200
27.917	J	[kgcm²]	32.600
32.267	J	[kgcm²]	21.500
36.667	J	[kgcm²]	21.200
39.160	J	[kgcm²]	15.700
44.500	J	[kgcm²]	15.500
49.500	J	[kgcm²]	10.600
56.250	J	[kgcm²]	10.500

► The moments of inertia relate to the drive shaft of the gearbox.
► The total moment of inertia is calculated by adding the values of gearbox, motor and accessories.

GST□□-3

► Moment of inertia (J) depending on ratio i

Gearbox			GST05
36.267	J	[kgcm²]	0.195
46.259	J	[kgcm²]	0.141
56.667	J	[kgcm²]	0.108
63.467	J	[kgcm²]	0.192
71.238	J	[kgcm²]	0.073
80.952	J	[kgcm²]	0.139
91.746	J	[kgcm²]	0.050
99.167	J	[kgcm²]	0.107
116.277	J	[kgcm²]	0.033
124.667	J	[kgcm²]	0.072
145.714	J	[kgcm²]	0.023
160.556	J	[kgcm²]	0.050
179.067	J	[kgcm²]	0.033
191.973	J	[kgcm²]	0.014
224.400	J	[kgcm²]	0.023
255.000	J	[kgcm²]	0.023
295.638	J	[kgcm²]	0.014
335.952	J	[kgcm²]	0.014

Gearbox			GST06
39.200	J	[kgcm²]	0.362
44.000	J	[kgcm²]	0.195
51.022	J	[kgcm²]	0.320
53.900	J	[kgcm²]	0.178
67.760	J	[kgcm²]	0.114
70.156	J	[kgcm²]	0.160
80.952	J	[kgcm²]	0.203
87.267	J	[kgcm²]	0.150
99.167	J	[kgcm²]	0.150
109.707	J	[kgcm²]	0.096
124.667	J	[kgcm²]	0.096
141.289	J	[kgcm²]	0.063
160.556	J	[kgcm²]	0.063
179.067	J	[kgcm²]	0.043
203.485	J	[kgcm²]	0.042
231.733	J	[kgcm²]	0.040
255.000	J	[kgcm²]	0.029
290.400	J	[kgcm²]	0.027
330.000	J	[kgcm²]	0.027
382.590	J	[kgcm²]	0.026
434.762	J	[kgcm²]	0.025

Gearbox			GST07
39.200	J	[kgcm²]	0.974
44.000	J	[kgcm²]	0.534
51.022	J	[kgcm²]	0.843
53.900	J	[kgcm²]	0.484
65.079	J	[kgcm²]	0.313
70.156	J	[kgcm²]	0.431
79.762	J	[kgcm²]	0.536
85.983	J	[kgcm²]	0.400
97.708	J	[kgcm²]	0.399
111.915	J	[kgcm²]	0.238
127.176	J	[kgcm²]	0.237
139.211	J	[kgcm²]	0.166
158.194	J	[kgcm²]	0.166
180.156	J	[kgcm²]	0.108
204.722	J	[kgcm²]	0.107
236.622	J	[kgcm²]	0.101
248.458	J	[kgcm²]	0.077
268.889	J	[kgcm²]	0.101
326.333	J	[kgcm²]	0.073
367.033	J	[kgcm²]	0.094
417.083	J	[kgcm²]	0.067

Gearbox			GST09
40.136	J	[kgcm²]	2.140
43.267	J	[kgcm²]	1.550
49.167	J	[kgcm²]	1.530
53.044	J	[kgcm²]	1.380
60.278	J	[kgcm²]	1.370
71.867	J	[kgcm²]	1.170
81.667	J	[kgcm²]	1.160
93.541	J	[kgcm²]	0.706
99.167	J	[kgcm²]	1.070
113.585	J	[kgcm²]	0.652
129.074	J	[kgcm²]	0.649
141.289	J	[kgcm²]	0.458
160.556	J	[kgcm²]	0.456
182.844	J	[kgcm²]	0.297
207.778	J	[kgcm²]	0.295
236.622	J	[kgcm²]	0.275
252.167	J	[kgcm²]	0.212
268.889	J	[kgcm²]	0.275
326.333	J	[kgcm²]	0.198
363.000	J	[kgcm²]	0.255
412.500	J	[kgcm²]	0.183

► The moments of inertia relate to the drive shaft of the gearbox.
► The total moment of inertia is calculated by adding the values of gearbox, motor and accessories.

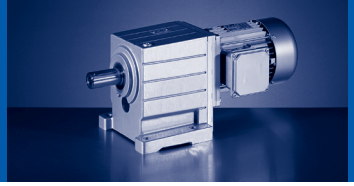

► Moment of inertia (J) depending on ratio i

Gearbox			GST11
40.816	J	[kgcm²]	6.360
44.000	J	[kgcm²]	5.660
50.000	J	[kgcm²]	5.600
57.968	J	[kgcm²]	4.770
61.250	J	[kgcm²]	4.080
71.011	J	[kgcm²]	3.520
80.694	J	[kgcm²]	3.500
87.267	J	[kgcm²]	3.220
99.167	J	[kgcm²]	3.200
112.933	J	[kgcm²]	2.930
129.074	J	[kgcm²]	1.940
146.993	J	[kgcm²]	1.770
158.194	J	[kgcm²]	1.400
180.156	J	[kgcm²]	1.290
207.778	J	[kgcm²]	0.880
236.622	J	[kgcm²]	0.818
252.167	J	[kgcm²]	0.633
268.889	J	[kgcm²]	0.816
326.333	J	[kgcm²]	0.589
363.000	J	[kgcm²]	0.756
412.500	J	[kgcm²]	0.545

Gearbox			GST14
40.185	J	[kgcm²]	24.400
42.580	J	[kgcm²]	18.300
48.386	J	[kgcm²]	18.100
53.148	J	[kgcm²]	20.500
59.321	J	[kgcm²]	13.200
69.042	J	[kgcm²]	11.500
78.457	J	[kgcm²]	11.400
93.541	J	[kgcm²]	6.570
96.157	J	[kgcm²]	10.400
106.296	J	[kgcm²]	6.520
130.278	J	[kgcm²]	6.000
139.211	J	[kgcm²]	4.420
158.194	J	[kgcm²]	4.400
171.111	J	[kgcm²]	5.490
204.722	J	[kgcm²]	2.860
236.622	J	[kgcm²]	2.650
248.458	J	[kgcm²]	2.060
268.889	J	[kgcm²]	2.650
326.333	J	[kgcm²]	1.920
363.000	J	[kgcm²]	2.450
412.500	J	[kgcm²]	1.780

► The moments of inertia relate to the drive shaft of the gearbox.
► The total moment of inertia is calculated by adding the values of gearbox, motor and accessories.

Position of ventilation, sealing elements and oil level check

GST05...09-1

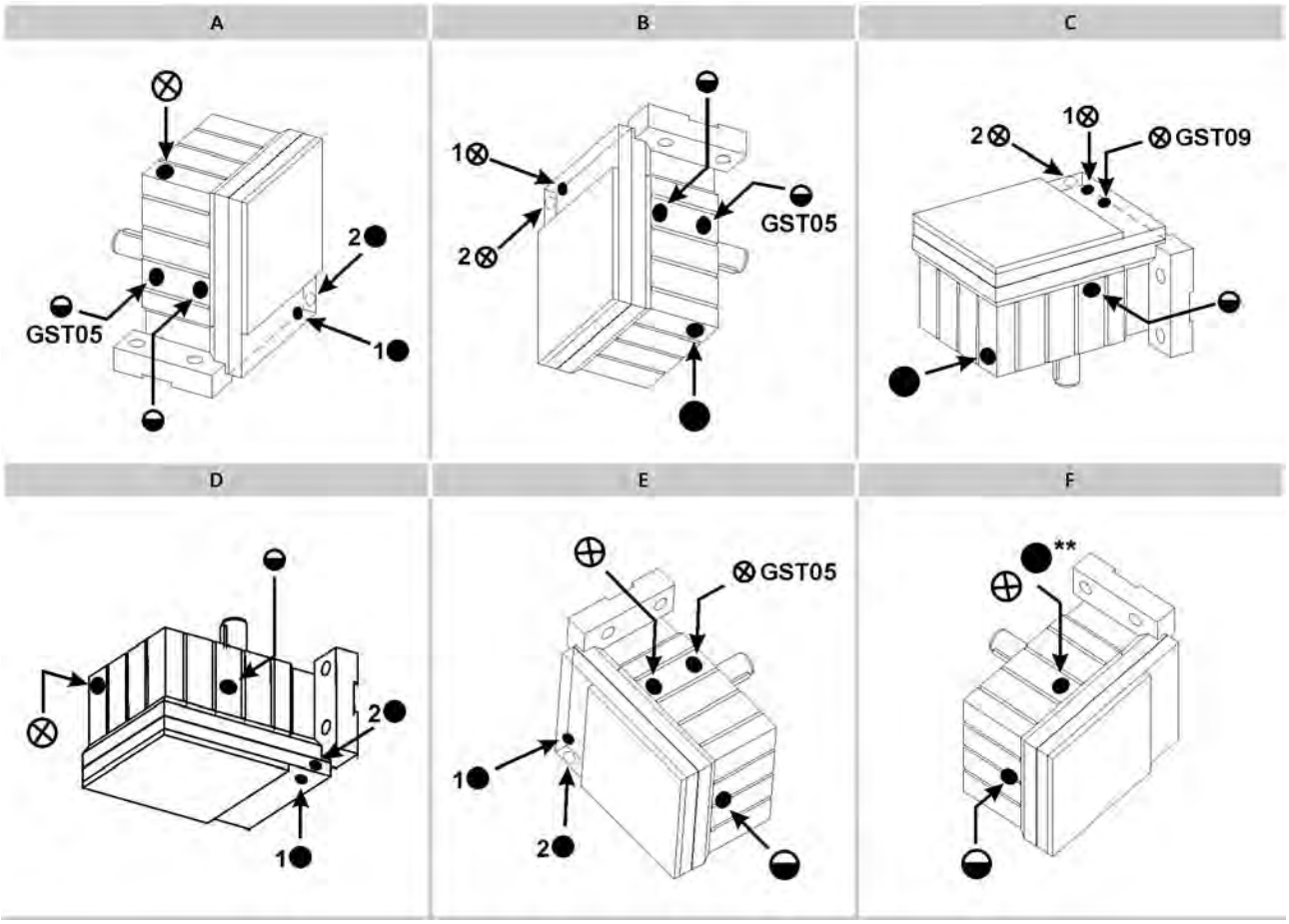

A ... F Mounting position
⊗ Ventilation / Oil filler plug
● Oil drain plug
◒ Oil control plug
* On both sides
** On opposite side

Item 1 standard
Item 2 only with:
- GST05-1M V□□ 090C□□
- GST05-1M V□□ 100C□□
- GST06-1M V□□ 112C□□
- GST07-1M V□□ 160C□□

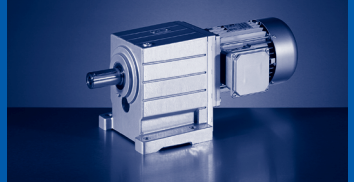

GST05...14-2

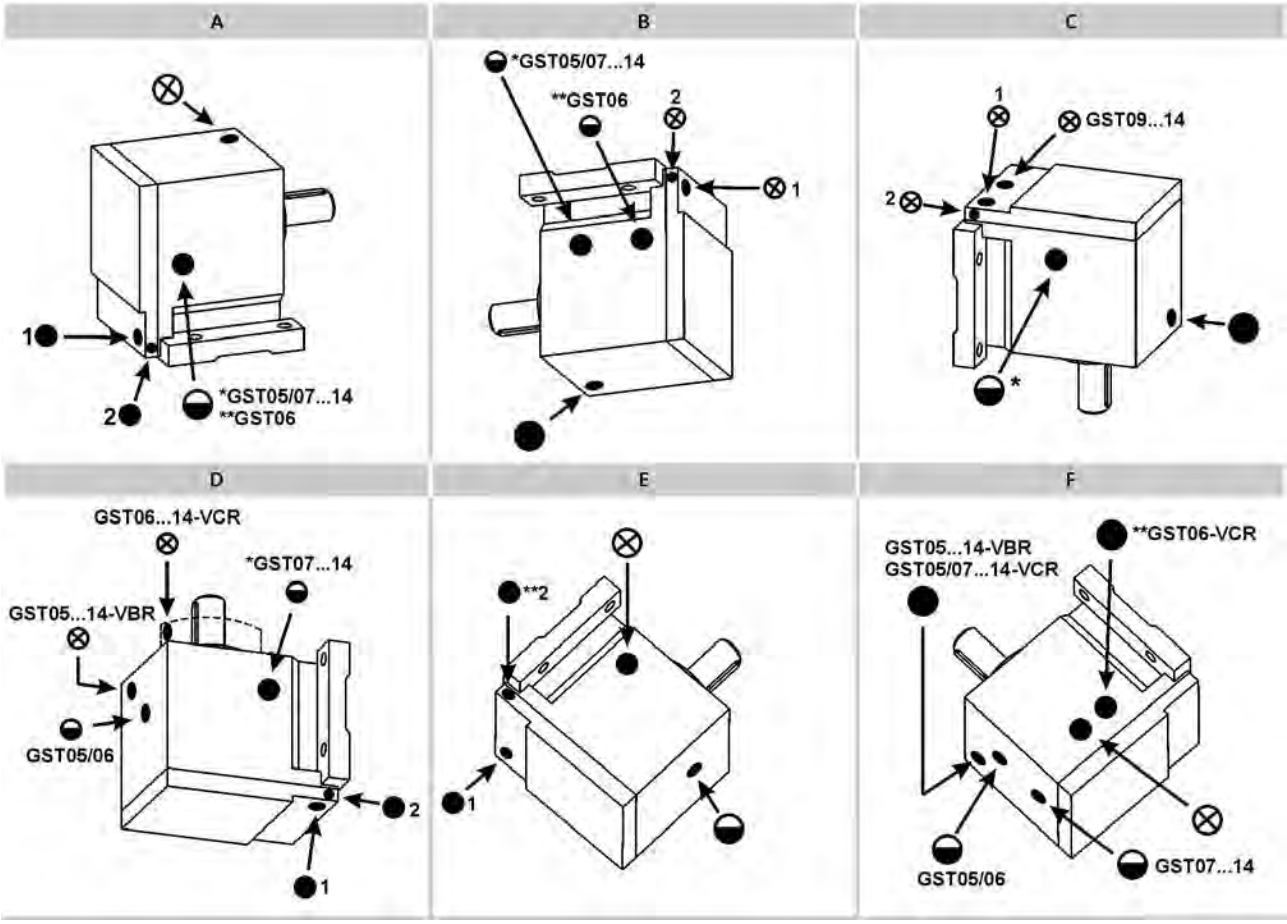

A ... F Mounting position
⊗ Ventilation / Oil filler plug
● Oil drain plug
◒ Oil control plug
* On both sides
** On opposite side

Item 1 standard
Item 2 only with:
- GST05-2M V□□ 090C□□
- GST05-2M V□□ 100C□□
- GST06-2M V□□ 112C□□
- GST07-2M V□□ 160C□□

GST05...14-3

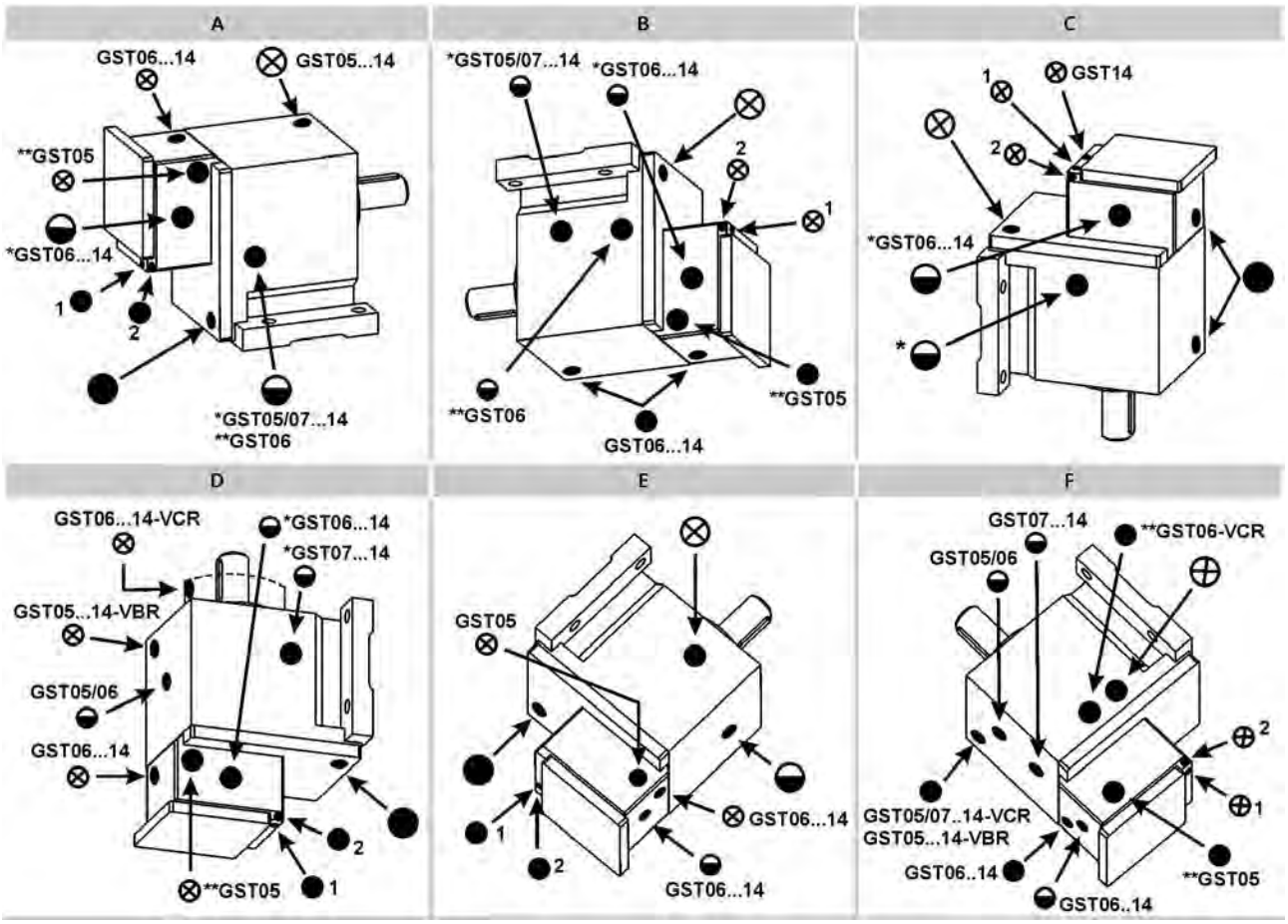

A ... F Mounting position
⊗ Ventilation / Oil filler plug
● Oil drain plug
◒ Oil control plug
* On both sides
** On opposite side

Item 1 standard
Item 2 only with:
- GST07-3M V□□ 090C□□
- GST07-3M V□□ 100C□□
- GST09-3M V□□ 112C□□

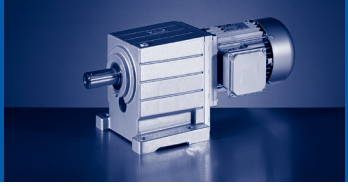

Compensation reservoir for mounting position C

GST□□-2

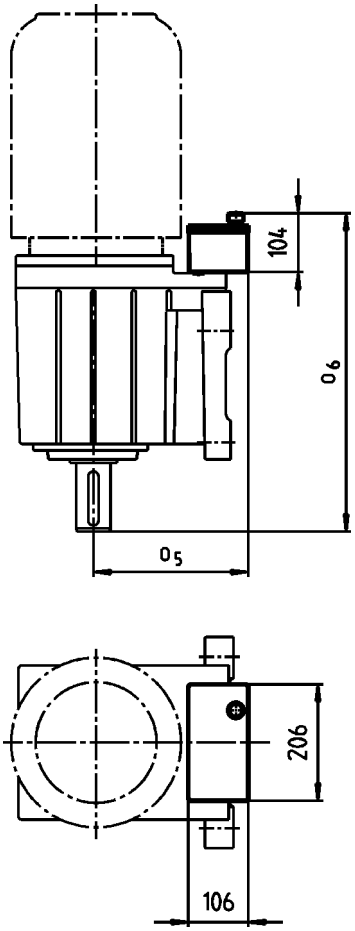

Motor	090 100		112		132		160 180 225	
	o_5	o_6	o_5	o_6	o_5	o_6	o_5	o_6
	[mm]	[mm]	[mm]	[mm]	[mm]	[mm]	[mm]	[mm]
GST09	206	477	226	477	245	477	260	477
GST11	208	536	230	540	254	540	268	540
GST14			252	640	282	640	282	640

► Terminal box position 4 not permitted.

GST□□-1M VBR

			063C11 063C12 063C31 063C32	063C42	071C11	071C13 071C31	071C32	071C33	071C42	080C11	080C13	080C31	080C32 080C33 080C42	090C11 090C31	090C32	100C12
GST04	m	[kg]	8		10	11	10	11	10	15	16	15	16	22	20	
GST05	m	[kg]		12			14			18	19	18	19	26	24	33
GST06	m	[kg]		16		19	18	19	18	22	23	22	23	30	28	37
GST07	m	[kg]								32	33	32	33	40	38	47
GST09	m	[kg]												54	52	61

			100C31	100C32	100C41	112C22	112C31	112C32	112C41	132C21	132C22 132C32	160C22	160C32	180C12	180C32	180C42
GST05	m	[kg]	30	33	30											
GST06	m	[kg]	34	37	34	46	43	53	50							
GST07	m	[kg]	44	47	44	55	52	62	59	94	92	136				
GST09	m	[kg]	58	61	58	69	66	76	73	109	107	151	171	206	216	241

3

GST□□-1M VCR

			063C11 063C12 063C31 063C32	063C42	071C11	071C13 071C31	071C32	071C33 071C42	080C11	080C13	080C31	080C32 080C33 080C42	090C11 090C31	090C32	100C12
GST04	m	[kg]	7	8	9	10	9	10	14	15	14	15	21	19	
GST05	m	[kg]		11		13			17	18	17	18	25	23	32
GST06	m	[kg]		15		17	16	17	20	21	20	21	29	27	36
GST07	m	[kg]							28	29	28	29	37	35	44
GST09	m	[kg]											50	48	57

			100C31	100C32	100C41	112C22	112C31	112C32	112C41	132C21	132C22 132C32	160C22	160C32	180C12	180C32	180C42
GST05	m	[kg]	29	32	29											
GST06	m	[kg]	33	36	33	44	41	51	48							
GST07	m	[kg]	41	44	41	52	49	59	56	91	89	133				
GST09	m	[kg]	54	57	54	65	62	72	69	104	102	146	166	201	211	236

► Weights with oil filling for mounting position A; all values are approximate.
The weights relate to the basic version. Bear in mind that additional weights may be needed (e.g. for motor options).

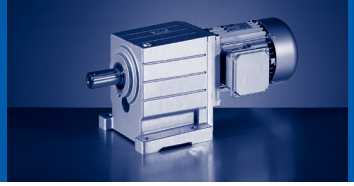

GST□□-1M VCK

			063C11 063C12 063C31 063C32	063C42	071C11	071C13 071C31	071C32	071C33 071C42	080C11	080C13	080C31	080C32 080C33 080C42	090C11 090C31	090C32	100C12
GST04	m	[kg]	8	9	10	11	10	11	15	16	15	16	22	20	
GST05	m	[kg]		13	14	15	14	15	18	19	18	19	26	24	33
GST06	m	[kg]		18		20	19	20	23	24	23	24	32	30	39
GST07	m	[kg]							32	33	32	33	41	39	48
GST09	m	[kg]											57	55	64

			100C31	100C32	100C41	112C22	112C31	112C32	112C41	132C21	132C22 132C32	160C22	160C32	180C12	180C32	180C42
GST05	m	[kg]	30	33	30											
GST06	m	[kg]	36	39	36	47	44	54	51							
GST07	m	[kg]	45	48	45	56	53	63	60	95	93	137				
GST09	m	[kg]	61	64	61	72	69	79	76	111	109	153	173	208	218	243

► Weights with oil filling for mounting position A; all values are approximate.
The weights relate to the basic version. Bear in mind that additional weights may be needed (e.g. for motor options).

GST□□-2M VAR / VBR

			063C02	063C11	063C12	063C22	063C31	063C32	063C42	071C11	071C13 071C31	071C32	071C33	071C42	080C11	080C13	080C31	080C32 080C33 080C42	090C11	090C31
GST03	m	[kg]	6		6			6				7		8						
GST04	m	[kg]		10				10		12	13	12	13	12	17	18	17	18	24	
GST05	m	[kg]							16	17	18	17	18		21	22	21	22	29	
GST06	m	[kg]							23		25	24	25		28	29	28	29	37	
GST07	m	[kg]														45	44	45	52	
GST09	m	[kg]																		79

			090C32	100C12	100C31	100C32	100C41	112C22	112C31	112C32	112C41	132C21	132C22 132C32	160C22	160C32	180C12	180C32	180C42	225C12	225C22
GST04	m	[kg]	22																	
GST05	m	[kg]	27	36	33	36	33													
GST06	m	[kg]	35	44	41	44	41	52	49	59	56									
GST07	m	[kg]	50	59	56	59	56	67	64	74	71	106	104	148	168					
GST09	m	[kg]	77	86	83	86	83	94	91	101	98	133	131	175	195	230	240	265		
GST11	m	[kg]		132		132	129	139	136	146	143	178	176	220	240	275	285	310	434	459
GST14	m	[kg]						231	228	238	235	267	265	309	329	364	374	399	522	547

GST□□-2M VCR

			063C02	063C11	063C12	063C22	063C31	063C32	063C42	071C11	071C13 071C31	071C32	071C33	071C42	080C11	080C13	080C31	080C32 080C33 080C42	090C11	090C31
GST03	m	[kg]	5		6	5		6				7		8						
GST04	m	[kg]		9			9		10	11	12	11	12		16	17	16	17	23	
GST05	m	[kg]							14			16			20	21	20	21	28	
GST06	m	[kg]							20			22			26	27	26	27	34	
GST07	m	[kg]														40	39	40	47	
GST09	m	[kg]																		70

			090C32	100C12	100C31	100C32	100C41	112C22	112C31	112C32	112C41	132C21	132C22 132C32	160C22	160C32	180C12	180C32	180C42	225C12	225C22
GST04	m	[kg]	21																	
GST05	m	[kg]	26	35	32	35	32													
GST06	m	[kg]	32	41	38	41	38	50	47	57	54									
GST07	m	[kg]	45	54	51	54	51	63	60	70	67	102	100	144	164					
GST09	m	[kg]	68	77	74	77	74	85	82	92	89	125	123	167	187	222	232	257		
GST11	m	[kg]		117		117	114	124	121	131	128	163	161	205	225	260	270	295	419	444
GST14	m	[kg]						203	200	210	207	239	237	281	301	336	346	371	494	519

► Weights with oil filling for mounting position A; all values are approximate.
The weights relate to the basic version. Bear in mind that additional weights may be needed (e.g. for motor options).

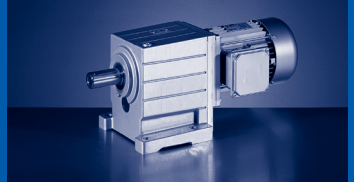

GST□□-2M VCK

			063C11	063C12	063C31	063C32	063C42	071C11	071C13 071C31	071C32	071C33	071C42	080C11	080C13	080C31	080C32 080C33 080C42	090C11	090C31	090C32
GST03	m	[kg]		6		6	7			8		9							
GST04	m	[kg]		10			11	12	13	12	13		17	18	17	18	24		22
GST05	m	[kg]					16	17	18	17	18		21	22	21	22	29		27
GST06	m	[kg]					23		25				29	30	29	30	37		35
GST07	m	[kg]												44	43	44	51		49
GST09	m	[kg]																77	75

			100C12	100C31	100C32	100C41	112C22	112C31	112C32	112C41	132C21	132C22 132C32	160C22	160C32	180C12	180C32	180C42	225C12	225C22
GST05	m	[kg]	36	33	36	33													
GST06	m	[kg]	44	41	44	41	53	50	60	57									
GST07	m	[kg]	58	55	58	55	67	64	74	71	106	104	148	168					
GST09	m	[kg]	84	81	84	81	92	89	99	96	132	130	174	194	229	239	264		
GST11	m	[kg]	128		128	125	135	132	142	139	173	171	215	235	270	280	305	430	455
GST14	m	[kg]					219	216	226	223	255	253	297	317	352	362	387	509	534

GST□□-2M VAL

			063C11 063C12 063C31 063C32	063C42	071C11	071C13 071C31	071C32	071C33	071C42	080C11	080C13	080C31	080C32 080C33 080C42	090C11	090C31	090C32	100C12
GST04	m	[kg]	11		13	14	13	14	13	18	19	18	19	25		23	
GST05	m	[kg]		17	19					23	24	23	24	31		29	38
GST06	m	[kg]		26		28	27	28		31	32	31	32	40		38	47
GST07	m	[kg]									49	48	49	56		54	63
GST09	m	[kg]													86	84	93
GST11	m	[kg]															142

			100C31	100C32	100C41	112C22	112C31	112C32	112C41	132C21	132C22 132C32	160C22	160C32	180C12	180C32	180C42	225C12	225C22
GST05	m	[kg]	35	38	35													
GST06	m	[kg]	44	47	44	55	52	62	59									
GST07	m	[kg]	60	63	60	71	68	78	75	110	108	152	172					
GST09	m	[kg]	90	93	90	101	98	108	105	140	138	182	202	237	247	272		
GST11	m	[kg]		142	139	150	147	157	154	188	186	230	250	285	295	320	445	470
GST14	m	[kg]				247	244	254	251	283	281	325	345	380	390	415	537	562

► Weights with oil filling for mounting position A; all values are approximate.
The weights relate to the basic version. Bear in mind that additional weights may be needed (e.g. for motor options).

GST□□-3M VAR / VBR

			063C11 063C12 063C31 063C32	063C42	071C11	071C13 071C31	071C32	071C33 071C42	080C11	080C13	080C31	080C32 080C33 080C42	090C11 090C31	090C32	100C12
GST05	m	[kg]	16		18	19	18	19	23	24	23				
GST06	m	[kg]	26		28	29	28	29	33	34	33	34	40	38	
GST07	m	[kg]		46	48		47	48	52	53	52	53	60	58	67
GST09	m	[kg]		78	80		79	80	84	85	84	85	92	90	99
GST11	m	[kg]							138	139	138	139	146	144	153
GST14	m	[kg]											252	250	259

			100C31	100C32	100C41	112C22	112C31	112C32	112C41	132C21	132C22 132C32	160C22	160C32	180C12	180C32
GST07	m	[kg]	64	67	64										
GST09	m	[kg]	96	99	96	107	104	114	111						
GST11	m	[kg]	150	153	150	162	159	169	166	200	198				
GST14	m	[kg]	256	259	256	267	264	274	271	307	305	349	369	404	414

GST□□-3M VCR

			063C11	063C12	063C31	063C32	063C42	071C11	071C13 071C31	071C32	071C33	071C42	080C11	080C13	080C31	080C32 080C33 080C42	090C11 090C31
GST05	m	[kg]	14	15	14	15		17		16	17		21	22	21		
GST06	m	[kg]	23				24	25	26	25	26		30	31	30	31	37
GST07	m	[kg]					41	43	44	43	44		47	48	47	48	55
GST09	m	[kg]					69	71	72	71	72	71	75	76	75	76	83
GST11	m	[kg]											123	124	123	124	131
GST14	m	[kg]															224

			090C32	100C12	100C31	100C32	100C41	112C22	112C31	112C32	112C41	132C21	132C22 132C32	160C22	160C32	180C12	180C32
GST06	m	[kg]	35														
GST07	m	[kg]	53	62	59	62	59										
GST09	m	[kg]	81	90	87	90	87	99	96	106	103						
GST11	m	[kg]	129	138	135	138	135	147	144	154	151	185	183				
GST14	m	[kg]	222	231	228	231	228	239	236	246	243	279	277	321	341	376	386

► Weights with oil filling for mounting position A; all values are approximate.
The weights relate to the basic version. Bear in mind that additional weights may be needed (e.g. for motor options).

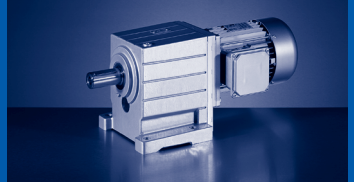

GST□□-3M VCK

			063C11 063C12 063C31 063C32	063C42	071C11	071C13 071C31	071C32	071C33	071C42	080C11	080C13	080C31	080C32 080C33 080C42	090C11 090C31	090C32
GST05	m	[kg]	16		18	19	18	19		23	24	23			
GST06	m	[kg]	26	27	28	29	28	29		33	34	33	34	40	38
GST07	m	[kg]		45	47	48	47	48		51	52	51	52	59	57
GST09	m	[kg]		76	78	79	78	79	78	82	83	82	83	90	88
GST11	m	[kg]								134	135	134	135	142	140
GST14	m	[kg]												240	238

			100C12	100C31	100C32	100C41	112C22	112C31	112C32	112C41	132C21	132C22 132C32	160C22	160C32	180C12	180C32
GST07	m	[kg]	66	63	66	63										
GST09	m	[kg]	97	94	97	94	106	103	113	110						
GST11	m	[kg]	149	146	149	146	157	154	164	161	196	194				
GST14	m	[kg]	247	244	247	244	255	252	262	259	294	292	336	356	391	401

GST□□-3M VAL

			063C11	063C12	063C31	063C32	063C42	071C11	071C13 071C31	071C32	071C33 071C42	080C11	080C13	080C31	080C32 080C33 080C42	090C11 090C31
GST05	m	[kg]	17	18	17	18		20		19	20	24	25	24		
GST06	m	[kg]	29					31	32	31	32	36	37	36	37	43
GST07	m	[kg]					50	52		51	52	56	57	56	57	64
GST09	m	[kg]					85	87		86	87	91	92	91	92	99
GST11	m	[kg]										149	150	149	150	157
GST14	m	[kg]														268

			090C32	100C12	100C31	100C32	100C41	112C22	112C31	112C32	112C41	132C21	132C22 132C32	160C22	160C32	180C12	180C32
GST06	m	[kg]	41														
GST07	m	[kg]	62	71	68	71	68										
GST09	m	[kg]	97	106	103	106	103	114	111	121	118						
GST11	m	[kg]	155	164	161	164	161	172	169	179	176	211	209				
GST14	m	[kg]	266	275	272	275	272	283	280	290	287	322	320	364	384	419	429

► Weights with oil filling for mounting position A; all values are approximate.
The weights relate to the basic version. Bear in mind that additional weights may be needed (e.g. for motor options).

GST□□-1M VBR

			080C32	090C12	090C32	100C12	100C32	112C22
GST04	m	[kg]	16	21	23			
GST05	m	[kg]	19	25	27	33	35	
GST06	m	[kg]	23	29	31	37	40	53
GST07	m	[kg]	33	39	41	47	49	62
GST09	m	[kg]		53	55	61	64	76

			132C12	132C22	160C22	160C32	180C12	180C32	180C42
GST07	m	[kg]	85	92	135				
GST09	m	[kg]	100	107	150	165	216	221	241

GST□□-1M VCR

			080C32	090C12	090C32	100C12	100C32	112C22
GST04	m	[kg]	15	20	22			
GST05	m	[kg]	18	24	26	32	34	
GST06	m	[kg]	21	28	30	36	38	51
GST07	m	[kg]	29	36	38	44	46	59
GST09	m	[kg]		49	51	57	59	72

			132C12	132C22	160C22	160C32	180C12	180C32	180C42
GST07	m	[kg]	82	89	132				
GST09	m	[kg]	95	102	145	160	211	216	236

- Weights with oil filling for mounting position A; all values are approximate.
  The weights relate to the basic version. Bear in mind that additional weights may be needed (e.g. for motor options).

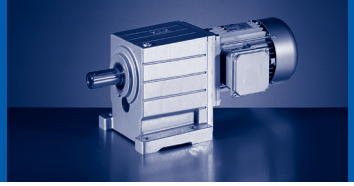

GST□□-1M VCK

			080C32	090C12	090C32	100C12	100C32	112C22
GST04	m	[kg]	16	21	23			
GST05	m	[kg]	19	25	27	33	36	
GST06	m	[kg]	24	31	33	39	41	54
GST07	m	[kg]	33	40	42	48	50	63
GST09	m	[kg]		56	58	64	66	79

			132C12	132C22	160C22	160C32	180C12	180C32	180C42
GST07	m	[kg]	86	93	136				
GST09	m	[kg]	102	109	152	167	218	223	243

► Weights with oil filling for mounting position A; all values are approximate.
The weights relate to the basic version. Bear in mind that additional weights may be needed (e.g. for motor options).

GST□□-2M VAR / VBR

			080C32	090C12	090C32	100C12	100C32	112C22	132C12
GST04	m	[kg]	18	23	25				
GST05	m	[kg]	22	28	30	36	39		
GST06	m	[kg]	29	36	38	44	46	59	81
GST07	m	[kg]	45	51	53	59	61	74	97
GST09	m	[kg]		78	80	86	88	101	124
GST11	m	[kg]				132	134	146	169
GST14	m	[kg]						238	258

			132C22	160C22	160C32	180C12	180C32	180C42	225C12	225C22
GST06	m	[kg]	88							
GST07	m	[kg]	104	147	162					
GST09	m	[kg]	131	174	189	240	245	265		
GST11	m	[kg]	176	219	234	285	290	310	509	529
GST14	m	[kg]	265	308	323	374	379	399	597	617

3

GST□□-2M VCR

			080C32	090C12	090C32	100C12	100C32	112C22	132C12
GST04	m	[kg]	17	22	24				
GST05	m	[kg]	21	27	29	35	37		
GST06	m	[kg]	27	33	35	41	44	57	79
GST07	m	[kg]	40	46	48	54	57	70	93
GST09	m	[kg]		69	71	77	80	92	116
GST11	m	[kg]				117	120	131	154
GST14	m	[kg]						210	230

			132C22	160C22	160C32	180C12	180C32	180C42	225C12	225C22
GST06	m	[kg]	86							
GST07	m	[kg]	100	143	158					
GST09	m	[kg]	123	166	181	232	237	257		
GST11	m	[kg]	161	204	219	270	275	295	494	514
GST14	m	[kg]	237	280	295	346	351	371	569	589

► Weights with oil filling for mounting position A; all values are approximate.
The weights relate to the basic version. Bear in mind that additional weights may be needed (e.g. for motor options).

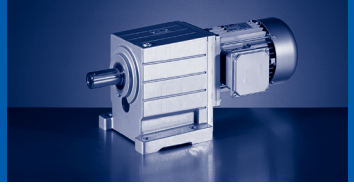

GST□□-2M VCK

			080C32	090C12	090C32	100C12	100C32	112C22	132C12
GST04	m	[kg]	18	23	25				
GST05	m	[kg]	22	28	30	36	39		
GST06	m	[kg]	30	36	38	44	47	60	82
GST07	m	[kg]	44	50	52	58	61	74	97
GST09	m	[kg]		76	78	84	87	99	123
GST11	m	[kg]				128	130	142	164
GST14	m	[kg]						226	246

			132C22	160C22	160C32	180C12	180C32	180C42	225C12	225C22
GST06	m	[kg]	89							
GST07	m	[kg]	104	147	162					
GST09	m	[kg]	130	173	188	239	244	264		
GST11	m	[kg]	171	214	229	280	285	305	505	525
GST14	m	[kg]	253	296	311	362	367	387	584	604

GST□□-2M VAL

			080C32	090C12	090C32	100C12	100C32	112C22	132C12
GST04	m	[kg]	19	24	26				
GST05	m	[kg]	24	30	32	38	40		
GST06	m	[kg]	32	39	41	47	49	62	84
GST07	m	[kg]	49	55	57	63	65	78	101
GST09	m	[kg]		85	87	93	95	108	131
GST11	m	[kg]				142	145	157	179
GST14	m	[kg]						254	274

			132C22	160C22	160C32	180C12	180C32	180C42	225C12	225C22
GST06	m	[kg]	91							
GST07	m	[kg]	108	151	166					
GST09	m	[kg]	138	181	196	247	252	272		
GST11	m	[kg]	186	229	244	295	300	320	520	540
GST14	m	[kg]	281	324	339	390	395	415	612	632

► Weights with oil filling for mounting position A; all values are approximate.
The weights relate to the basic version. Bear in mind that additional weights may be needed (e.g. for motor options).

GST□□-3M VAR / VBR

			080C32	090C12	090C32	100C12	100C32	112C22
GST06	m	[kg]	34	39	41			
GST07	m	[kg]	53	59	61	67	69	
GST09	m	[kg]	85	91	93	99	101	114
GST11	m	[kg]	139	145	147	153	156	169
GST14	m	[kg]		251	253	259	262	274

			132C12	132C22	160C22	160C32	180C12	180C32
GST11	m	[kg]	191	198				
GST14	m	[kg]	298	305	348	363	414	419

GST□□-3M VCR

			080C32	090C12	090C32	100C12	100C32	112C22
GST06	m	[kg]	31	36	38			
GST07	m	[kg]	48	54	56	62	65	
GST09	m	[kg]	76	82	84	90	93	106
GST11	m	[kg]	124	130	132	138	141	154
GST14	m	[kg]		223	225	231	234	246

			132C12	132C22	160C22	160C32	180C12	180C32
GST11	m	[kg]	176	183				
GST14	m	[kg]	270	277	320	335	386	391

- Weights with oil filling for mounting position A; all values are approximate.
  The weights relate to the basic version. Bear in mind that additional weights may be needed (e.g. for motor options).

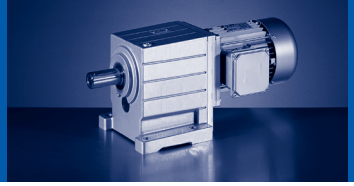

GST□□-3M VCK

			080C32	090C12	090C32	100C12	100C32	112C22
GST06	m	[kg]	34	39	41			
GST07	m	[kg]	52	58	60	66	69	
GST09	m	[kg]	83	89	91	97	100	113
GST11	m	[kg]	135	141	143	149	151	164
GST14	m	[kg]		239	241	247	249	262

			132C12	132C22	160C22	160C32	180C12	180C32
GST11	m	[kg]	187	194				
GST14	m	[kg]	285	292	335	350	401	406

GST□□-3M VAL

			080C32	090C12	090C32	100C12	100C32	112C22
GST06	m	[kg]	37	42	44			
GST07	m	[kg]	57	63	65	71	73	
GST09	m	[kg]	92	98	100	106	108	121
GST11	m	[kg]	150	156	158	164	166	179
GST14	m	[kg]		267	269	275	277	290

			132C12	132C22	160C22	160C32	180C12	180C32
GST11	m	[kg]	202	209				
GST14	m	[kg]	313	320	363	378	429	434

- Weights with oil filling for mounting position A; all values are approximate.
  The weights relate to the basic version. Bear in mind that additional weights may be needed (e.g. for motor options).

50 Hz: P_N=0.06 kW
60 Hz: P_N=0.075 kW
87 Hz: P_N=0.11 kW

n_N	1425 r/min		1725 r/min		2535 r/min		M_2 [Nm]	i		
f_N	50 Hz		60 Hz		87 Hz					
P_N	0.06 kW		0.075 kW		0.11 kW					
	n_2 [r/min]	c	n_2 [r/min]	c	n_2 [r/min]	c				
	75	5.6	91	5.6	133	5.4	7.0	19.013	GST03-2M□□□063C02	218
	67	5.3	81	5.3	119	5.1	8.0	21.350	GST03-2M□□□063C02	218
	58	4.7	70	4.7	103	4.5	10	24.595	GST03-2M□□□063C02	218
	52	4.2	63	4.2	92	4.0	11	27.618	GST03-2M□□□063C02	218
	45	3.6	54	3.6	79	3.4	13	32.000	GST03-2M□□□063C02	218
	40	3.2	48	3.2	71	3.1	14	35.933	GST03-2M□□□063C02	218
	34	2.8	42	2.8	61	2.7	16	41.455	GST03-2M□□□063C02	218
	31	2.5	37	2.5	55	2.5	18	46.550	GST03-2M□□□063C02	218
	27	2.2	33	2.2	48	2.2	21	52.909	GST03-2M□□□063C02	218
	24	1.9	29	1.9	43	1.9	23	59.413	GST03-2M□□□063C02	218

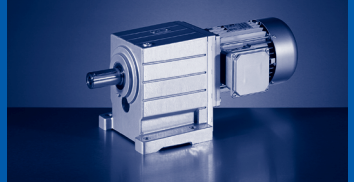

50 Hz: P_N=0.09 kW
60 Hz: P_N=0.11 kW
87 Hz: P_N=0.16 kW

n_N	1375 r/min		1675 r/min		2485 r/min		M_2 [Nm]	i		
f_N	50 Hz		60 Hz		87 Hz					
P_N	0.09 kW		0.11 kW		0.16 kW					
	n_2 [r/min]	c	n_2 [r/min]	c	n_2 [r/min]	c				
	137	5.7	167	5.5	248	4.8	6.0	10.033	GST03-2M□□□063C22	218
	120	5.1	147	4.9	217	4.3	7.0	11.429	GST03-2M□□□063C22	218
	107	4.8	131	4.7	194	4.1	8.0	12.833	GST03-2M□□□063C22	218
	93	4.3	113	4.2	168	3.7	9.0	14.836	GST03-2M□□□063C22	218
	83	4.1	101	4.1	149	3.9	10	16.660	GST03-2M□□□063C22	218
	72	3.6	88	3.6	131	3.5	12	19.013	GST03-2M□□□063C22	218
	64	3.4	79	3.4	116	3.3	13	21.350	GST03-2M□□□063C22	218
	56	3.0	68	3.0	101	2.9	15	24.595	GST03-2M□□□063C22	218
	50	2.7	61	2.7	90	2.6	17	27.618	GST03-2M□□□063C22	218
	43	2.3	52	2.3	78	2.2	19	32.000	GST03-2M□□□063C22	218
	38	2.1	47	2.1	69	2.0	22	35.933	GST03-2M□□□063C22	218
	33	1.8	40	1.8	60	1.7	25	41.455	GST03-2M□□□063C22	218
	30	1.6	36	1.6	53	1.6	28	46.550	GST03-2M□□□063C22	218
	26	1.4	32	1.4	47	1.4	32	52.909	GST03-2M□□□063C22	218
	23	1.3	28	1.3	42	1.3	36	59.413	GST03-2M□□□063C22	218

50 Hz: P_N=0.12 kW
60 Hz: P_N=0.145 kW
87 Hz: P_N=0.21 kW

n_N	1425 r/min		1725 r/min		2535 r/min		M_2 [Nm]	i		
f_N	50 Hz		60 Hz		87 Hz					
P_N	0.12 kW		0.145 kW		0.21 kW					
	n_2 [r/min]	c	n_2 [r/min]	c	n_2 [r/min]	c				
	636	5.4	770	5.1	1132	4.5	2.0	2.240	GST04-1M □□□063C12	212
	499	5.0	604	4.8	887	4.2	2.0	2.857	GST04-1M □□□063C12	212
	324	5.5	392	5.2	576	4.6	4.0	4.400	GST04-1M □□□063C12	212
	252	4.6	304	4.4	447	3.9	5.0	5.667	GST04-1M □□□063C12	212
	223	5.4	270	5.1	396	4.5	5.0	6.400	GST04-2M □□□063C12	218
	204	5.4	247	5.2	363	4.6	5.0	6.982	GST03-2M □□□063C12	218
	198	4.0	240	3.8	353	3.4	6.0	7.182	GST04-1M □□□063C12	212
	182	5.2	220	4.9	323	4.3	6.0	7.840	GST03-2M □□□063C12	218
	160	4.7	193	4.5	284	3.9	7.0	8.935	GST03-2M □□□063C12	218
	158	3.3	192	3.1	282	2.7	7.0	9.000	GST04-1M □□□063C12	212
	145	5.4	175	5.1	257	4.5	8.0	9.856	GST04-2M □□□063C12	218
	142	4.4	172	4.2	253	3.7	8.0	10.033	GST03-2M □□□063C12	218
	125	4.0	151	3.8	222	3.3	9.0	11.429	GST03-2M □□□063C12	218
	120	1.7	146	1.6	214	1.4	9.0	11.857	GST04-1M □□□063C12	212
	113	5.0	137	4.8	202	4.2	10	12.571	GST04-2M □□□063C12	218
	111	3.8	134	3.6	198	3.2	10	12.833	GST03-2M □□□063C12	218
	100	5.0	121	4.8	177	4.2	11	14.286	GST04-2M □□□063C12	218
	96	3.4	116	3.2	171	2.8	12	14.836	GST03-2M □□□063C12	218
	86	3.2	104	3.2	152	3.0	13	16.660	GST03-2M □□□063C12	218
	75	2.8	91	2.8	133	2.7	15	19.013	GST03-2M □□□063C12	218
	74	4.7	89	4.7	131	4.4	15	19.360	GST04-2M □□□063C12	218
	67	2.7	81	2.7	119	2.5	17	21.350	GST03-2M □□□063C12	218
	65	3.6	78	3.6	115	3.5	17	22.000	GST04-2M □□□063C12	218
	58	2.4	70	2.4	103	2.2	19	24.595	GST03-2M □□□063C12	218
	57	3.7	69	3.7	102	3.5	20	24.933	GST04-2M □□□063C12	218
	52	2.1	63	2.1	92	2.0	22	27.618	GST03-2M □□□063C12	218
	50	2.9	61	2.9	90	2.7	22	28.333	GST04-2M □□□063C12	218
	45	1.8	54	1.8	79	1.7	25	32.000	GST03-2M □□□063C12	218
	45	2.9	55	2.9	80	2.8	25	31.600	GST04-2M □□□063C12	218
	40	1.6	48	1.6	71	1.5	28	35.933	GST03-2M □□□063C12	218
	40	2.3	48	2.3	71	2.2	28	35.909	GST04-2M □□□063C12	218
	36	2.4	44	2.4	64	2.3	31	39.600	GST04-2M □□□063C12	218
	34	1.4	42	1.4	61	1.3	32	41.455	GST03-2M □□□063C12	218
	32	1.9	38	1.9	56	1.9	35	45.000	GST04-2M □□□063C12	218
	31	1.2	37	1.2	55	1.2	36	46.550	GST03-2M □□□063C12	218
	27	1.1	33	1.1	48	1.1	41	52.909	GST03-2M □□□063C12	218
	27	1.7	33	1.7	49	1.7	41	52.171	GST04-2M □□□063C12	218
	24	1.4	29	1.4	43	1.4	46	59.286	GST04-2M □□□063C12	218
	23	3.0	27	3.0	40	3.0	49	63.467	GST05-3M □□□063C12	224
	20	3.1	24	3.1	36	3.1	55	71.238	GST05-3M □□□063C12	224
	18	2.4	21	2.4	31	2.4	62	80.952	GST05-3M □□□063C12	224

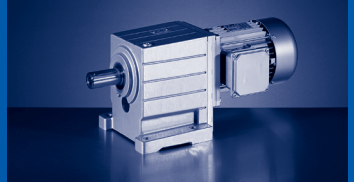

50 Hz: P_N=0.12 kW
60 Hz: P_N=0.145 kW
87 Hz: P_N=0.21 kW

n_N	1425 r/min		1725 r/min		2535 r/min		M_2 [Nm]	i		
f_N	50 Hz		60 Hz		87 Hz					
P_N	0.12 kW		0.145 kW		0.21 kW					
	n_2 [r/min]	c	n_2 [r/min]	c	n_2 [r/min]	c				
	16	2.4	19	2.4	28	2.4	71	91.746	GST05-3M □□□063C12	224
	12	1.9	15	1.9	22	1.9	89	116.277	GST05-3M □□□063C12	224
	11	1.6	14	1.6	20	1.6	96	124.667	GST05-3M □□□063C12	224
	9.8	1.5	12	1.5	17	1.5	112	145.714	GST05-3M □□□063C12	224
	8.9	1.2	11	1.2	16	1.2	123	160.556	GST05-3M □□□063C12	224
	8.9	2.8	11	2.8	16	2.8	123	160.556	GST06-3M □□□063C12	224
	8	1.2	9.6	1.2	14	1.2	138	179.067	GST05-3M □□□063C12	224
	8	2.7	9.6	2.7	14	2.7	138	179.067	GST06-3M □□□063C12	224
	7.4	1.2	9	1.2	13	1.2	148	191.973	GST05-3M □□□063C12	224
	7	2.2	8.5	2.2	13	2.2	156	203.485	GST06-3M □□□063C12	224
	6.4	1.0	7.7	1.0	11	1.0	173	224.400	GST05-3M □□□063C12	224
	6.2	2.1	7.4	2.1	11	2.1	178	231.733	GST06-3M □□□063C12	224
	5.6	1.8	6.8	1.8	9.9	1.8	196	255.000	GST06-3M □□□063C12	224
	4.9	1.7	5.9	1.7	8.7	1.7	223	290.400	GST06-3M □□□063C12	224
	4.3	1.4	5.2	1.4	7.7	1.4	254	330.000	GST06-3M □□□063C12	224
	3.7	1.3	4.5	1.3	6.6	1.3	294	382.590	GST06-3M □□□063C12	224
	3.3	1.1	4	1.1	5.8	1.1	334	434.762	GST06-3M □□□063C12	224

50 Hz: P_N=0.18 kW
60 Hz: P_N=0.22 kW

n_N	2740 r/min		3340 r/min				M_2 [Nm]	i		
f_N	50 Hz		60 Hz							
P_N	0.18 kW		0.22 kW							
	n_2 [r/min]	c	n_2 [r/min]	c						
	1223	5.7	1491	5.3			1.0	2.240	GST04-1M □□□063C11	212
	959	5.3	1169	4.9			2.0	2.857	GST04-1M □□□063C11	212
	623	5.8	759	5.4			3.0	4.400	GST04-1M □□□063C11	212
	484	4.8	589	4.5			4.0	5.667	GST04-1M □□□063C11	212
	428	5.7	522	5.3			4.0	6.400	GST04-2M □□□063C11	218
	382	4.2	465	3.9			4.0	7.182	GST04-1M □□□063C11	212
	304	3.4	371	3.2			6.0	9.000	GST04-1M □□□063C11	212
	278	5.7	339	5.3			6.0	9.856	GST04-2M □□□063C11	218
	231	1.8	282	1.7			7.0	11.857	GST04-1M □□□063C11	212
	218	5.3	266	4.9			8.0	12.571	GST04-2M □□□063C11	218
	192	5.3	234	4.9			9.0	14.286	GST04-2M □□□063C11	218
	142	5.6	173	5.2			12	19.360	GST04-2M □□□063C11	218
	125	4.3	152	4.1			13	22.000	GST04-2M □□□063C11	218
	110	4.4	134	4.1			15	24.933	GST04-2M □□□063C11	218
	97	3.4	118	3.2			17	28.333	GST04-2M □□□063C11	218
	87	3.5	106	3.3			19	31.600	GST04-2M □□□063C11	218
	76	2.7	93	2.6			22	35.909	GST04-2M □□□063C11	218
	69	2.8	84	2.6			24	39.600	GST04-2M □□□063C11	218
	61	2.4	74	2.3			27	45.000	GST04-2M □□□063C11	218
	53	2.2	64	2.1			32	52.171	GST04-2M □□□063C11	218
	46	1.8	56	1.8			36	59.286	GST04-2M □□□063C11	218
	43	3.8	53	3.7			38	63.467	GST05-3M □□□063C11	224
	39	3.9	47	3.8			43	71.238	GST05-3M □□□063C11	224
	34	3.0	41	2.9			49	80.952	GST05-3M □□□063C11	224
	30	3.1	36	3.0			55	91.746	GST05-3M □□□063C11	224
	24	2.5	29	2.4			70	116.277	GST05-3M □□□063C11	224
	22	2.0	27	1.9			75	124.667	GST05-3M □□□063C11	224
	19	2.0	23	1.9			87	145.714	GST05-3M □□□063C11	224
	17	1.6	21	1.5			96	160.556	GST05-3M □□□063C11	224
	15	1.6	19	1.5			107	179.067	GST05-3M □□□063C11	224
	14	1.5	17	1.4			115	191.973	GST05-3M □□□063C11	224
	14	2.8	16	2.7			122	203.485	GST06-3M □□□063C11	224
	12	1.3	15	1.2			135	224.400	GST05-3M □□□063C11	224
	12	2.7	14	2.6			139	231.733	GST06-3M □□□063C11	224
	11	1.0	13	1.0			153	255.000	GST05-3M □□□063C11	224
	11	2.3	13	2.2			153	255.000	GST06-3M □□□063C11	224
	9.4	2.2	12	2.1			174	290.400	GST06-3M □□□063C11	224
	9.3	1.0	11	0.9			177	295.638	GST05-3M □□□063C11	224
	8.3	1.8	10	1.7			198	330.000	GST06-3M □□□063C11	224
	7.2	1.6	8.7	1.6			229	382.590	GST06-3M □□□063C11	224
	6.3	1.4	7.7	1.3			261	434.762	GST06-3M □□□063C11	224

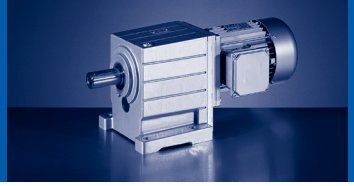

50 Hz: P_N=0.18 kW
60 Hz: P_N=0.22 kW
87 Hz: P_N=0.33 kW

n_N	1365 r/min		1665 r/min		2475 r/min		M_2 [Nm]	i		
f_N	50 Hz		60 Hz		87 Hz					
P_N	0.18 kW		0.22 kW		0.33 kW					
	n_2 [r/min]	c	n_2 [r/min]	c	n_2 [r/min]	c				
	609	3.4	743	3.3	1105	2.9	3.0	2.240	GST04-1M □□□063C32	212
	526	5.7	641	5.5	953	4.8	3.0	2.597	GST03-2M □□□063C32	218
	478	3.2	583	3.1	866	2.7	4.0	2.857	GST04-1M □□□063C32	212
	400	4.6	488	4.5	725	3.9	4.0	3.413	GST03-2M □□□063C32	218
	313	3.9	381	3.8	567	3.3	5.0	4.368	GST03-2M □□□063C32	218
	310	3.5	378	3.4	563	3.0	6.0	4.400	GST04-1M □□□063C32	212
	257	4.1	313	4.0	466	3.5	7.0	5.312	GST03-2M □□□063C32	218
	241	2.9	294	2.8	437	2.5	7.0	5.667	GST04-1M □□□063C32	212
	229	3.9	279	3.8	415	3.3	7.0	5.965	GST03-2M □□□063C32	218
	213	3.4	260	3.3	387	2.9	8.0	6.400	GST04-2M □□□063C32	218
	196	3.5	239	3.4	355	2.9	9.0	6.982	GST03-2M □□□063C32	218
	190	2.6	232	2.5	345	2.2	9.0	7.182	GST04-1M □□□063C32	212
	174	3.3	212	3.2	316	2.8	10	7.840	GST03-2M □□□063C32	218
	153	3.0	186	2.9	277	2.5	11	8.935	GST03-2M □□□063C32	218
	152	2.1	185	2.0	275	1.8	11	9.000	GST04-1M □□□063C32	212
	139	3.4	169	3.3	251	2.9	12	9.856	GST04-2M □□□063C32	218
	136	2.8	166	2.7	247	2.4	12	10.033	GST03-2M □□□063C32	218
	119	2.5	146	2.5	217	2.1	14	11.429	GST03-2M □□□063C32	218
	115	1.1	140	1.1	209	0.9	15	11.857	GST04-1M □□□063C32	212
	109	3.2	132	3.1	197	2.7	15	12.571	GST04-2M □□□063C32	218
	106	2.4	130	2.3	193	2.0	16	12.833	GST03-2M □□□063C32	218
	96	3.2	117	3.1	173	2.7	18	14.286	GST04-2M □□□063C32	218
	92	2.2	112	2.1	167	1.8	18	14.836	GST03-2M □□□063C32	218
	82	2.0	100	2.0	149	1.9	20	16.660	GST03-2M □□□063C32	218
	72	1.8	88	1.8	130	1.7	23	19.013	GST03-2M □□□063C32	218
	71	3.0	86	3.0	128	2.9	24	19.360	GST04-2M □□□063C32	218
	64	1.7	78	1.7	116	1.6	26	21.350	GST03-2M □□□063C32	218
	62	2.3	76	2.3	113	2.2	27	22.000	GST04-2M □□□063C32	218
	56	1.5	68	1.5	101	1.4	30	24.595	GST03-2M □□□063C32	218
	55	2.3	67	2.3	99	2.3	31	24.933	GST04-2M □□□063C32	218
	49	1.3	60	1.3	90	1.3	34	27.618	GST03-2M □□□063C32	218
	48	1.8	59	1.8	87	1.8	35	28.333	GST04-2M □□□063C32	218
	43	1.2	52	1.2	77	1.1	39	32.000	GST03-2M □□□063C32	218
	43	1.9	53	1.9	78	1.8	39	31.600	GST04-2M □□□063C32	218
	38	1.0	46	1.0	69	1.0	44	35.933	GST03-2M □□□063C32	218
	38	1.5	46	1.5	69	1.4	44	35.909	GST04-2M □□□063C32	218
	38	3.1	46	3.1	68	3.0	44	36.267	GST05-3M □□□063C32	224
	35	1.5	42	1.5	63	1.5	48	39.600	GST04-2M □□□063C32	218
	33	0.9	40	0.9	60	0.9	51	41.455	GST03-2M □□□063C32	218
	30	1.2	37	1.2	55	1.2	55	45.000	GST04-2M □□□063C32	218
	30	2.6	36	2.6	54	2.6	56	46.259	GST05-3M □□□063C32	224

50 Hz: P_N=0.18 kW
60 Hz: P_N=0.22 kW
87 Hz: P_N=0.33 kW

n_N	1365 r/min		1665 r/min		2475 r/min		M_2 [Nm]	i		
f_N	50 Hz		60 Hz		87 Hz					
P_N	0.18 kW		0.22 kW		0.33 kW					
	n_2 [r/min]	c	n_2 [r/min]	c	n_2 [r/min]	c				
	26	1.1	32	1.1	47	1.1	64	52.171	GST04-2M □□□063C32	218
	23	0.9	28	0.9	42	0.9	72	59.286	GST04-2M □□□063C32	218
	22	1.9	26	1.9	39	1.9	76	63.467	GST05-3M □□□063C32	224
	19	2.0	23	2.0	35	2.0	86	71.238	GST05-3M □□□063C32	224
	17	1.5	21	1.5	31	1.5	97	80.952	GST05-3M □□□063C32	224
	17	3.2	21	3.2	31	3.2	97	80.952	GST06-3M □□□063C32	224
	15	1.5	18	1.5	27	1.5	110	91.746	GST05-3M □□□063C32	224
	12	1.2	14	1.2	21	1.2	140	116.277	GST05-3M □□□063C32	224
	12	2.8	15	2.8	23	2.8	132	109.707	GST06-3M □□□063C32	224
	11	1.0	13	1.0	20	1.0	150	124.667	GST05-3M □□□063C32	224
	11	2.3	13	2.3	20	2.3	150	124.667	GST06-3M □□□063C32	224
	9.7	2.2	12	2.2	18	2.2	170	141.289	GST06-3M □□□063C32	224
	9.4	1.0	11	1.0	17	1.0	175	145.714	GST05-3M □□□063C32	224
	8.5	1.8	10	1.8	15	1.8	193	160.556	GST06-3M □□□063C32	224
	7.6	1.7	9.3	1.7	14	1.7	216	179.067	GST06-3M □□□063C32	224
	6.7	1.4	8.2	1.4	12	1.4	245	203.485	GST06-3M □□□063C32	224
	5.9	1.3	7.2	1.3	11	1.3	279	231.733	GST06-3M □□□063C32	224
	5.4	1.1	6.5	1.1	9.7	1.1	307	255.000	GST06-3M □□□063C32	224
	4.7	1.1	5.7	1.1	8.5	1.1	350	290.400	GST06-3M □□□063C32	224
	4.1	0.9	5.1	0.9	7.5	0.9	397	330.000	GST06-3M □□□063C32	224
	3.6	0.8	4.4	0.8	6.5	0.8	460	382.590	GST06-3M □□□063C32	224

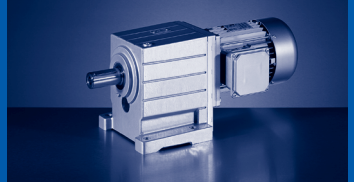

50 Hz: P_N=0.18 kW
60 Hz: P_N=0.22 kW

n_N	930 r/min		1130 r/min				M_2 [Nm]	i		
f_N	50 Hz		60 Hz							
P_N	0.18 kW		0.22 kW							
	n_2 [r/min]	c	n_2 [r/min]	c						
	581	5.4	706	5.4			3.0	1.600	GST04-1M □□□071C13	212
	415	5.4	505	5.4			4.0	2.240	GST05-1M □□□071C13	212
	326	4.8	396	4.8			5.0	2.857	GST04-1M □□□071C13	212
	315	5.4	382	5.4			5.0	2.956	GST04-2M □□□071C13	218
	266	3.9	323	3.9			6.0	3.500	GST04-1M □□□071C13	212
	229	5.4	279	5.4			7.0	4.053	GST04-2M □□□071C13	218
	211	3.1	257	3.1			8.0	4.400	GST04-1M □□□071C13	212
	179	5.4	218	5.4			9.0	5.187	GST04-2M □□□071C13	218
	164	2.4	199	2.4			10	5.667	GST04-1M □□□071C13	212
	145	4.8	177	4.8			12	6.400	GST04-2M □□□071C13	218
	130	1.9	157	1.9			13	7.182	GST04-1M □□□071C13	212
	116	4.1	141	4.1			14	8.000	GST04-2M □□□071C13	218
	105	2.6	127	2.6			16	8.900	GST05-1M □□□071C13	212
	103	1.4	126	1.4			16	9.000	GST04-1M □□□071C13	212
	94	3.7	115	3.7			18	9.856	GST04-2M □□□071C13	218
	83	3.0	100	3.0			21	11.250	GST06-1M □□□071C13	212
	83	3.0	101	3.0			20	11.200	GST04-2M □□□071C13	218
	82	1.5	99	1.5			21	11.375	GST05-1M □□□071C13	212
	74	3.1	90	3.1			23	12.571	GST04-2M □□□071C13	218
	65	2.4	79	2.4			26	14.286	GST04-2M □□□071C13	218
	60	2.5	73	2.5			28	15.400	GST04-2M □□□071C13	218
	53	2.0	65	2.0			31	17.500	GST04-2M □□□071C13	218
	48	2.0	58	2.0			35	19.360	GST04-2M □□□071C13	218
	42	1.6	51	1.6			40	22.000	GST04-2M □□□071C13	218
	37	1.6	45	1.6			45	24.933	GST04-2M □□□071C13	218
	33	1.3	40	1.3			51	28.333	GST04-2M □□□071C13	218
	33	2.9	40	2.9			51	28.333	GST05-2M □□□071C13	218
	29	1.3	36	1.3			57	31.600	GST04-2M □□□071C13	218
	29	2.8	35	2.8			58	32.267	GST05-2M □□□071C13	218
	26	1.0	32	1.0			64	35.909	GST04-2M □□□071C13	218
	26	2.1	31	2.1			64	36.267	GST05-3M □□□071C13	224
	25	2.3	31	2.3			66	36.667	GST05-2M □□□071C13	218
	24	1.0	29	1.0			71	39.600	GST04-2M □□□071C13	218
	24	2.4	29	2.4			70	39.160	GST05-2M □□□071C13	218
	21	0.8	25	0.8			81	45.000	GST04-2M □□□071C13	218
	21	1.9	25	1.9			80	44.500	GST05-2M □□□071C13	218
	20	1.8	24	1.8			82	46.259	GST05-3M □□□071C13	224
	19	1.5	23	1.5			90	50.050	GST05-2M □□□071C13	218
	19	3.0	23	3.0			89	49.500	GST06-2M □□□071C13	218
	17	3.0	20	3.0			101	56.250	GST06-2M □□□071C13	218
	16	1.5	20	1.5			102	56.875	GST05-2M □□□071C13	218

50 Hz: P_N=0.18 kW
60 Hz: P_N=0.22 kW

n_N	930 r/min		1130 r/min				M_2 [Nm]	i		
f_N	50 Hz		60 Hz							
P_N	0.18 kW		0.22 kW							
	n_2 [r/min]	c	n_2 [r/min]	c						
	16	1.6	20	1.6			100	56.667	GST05-3M □□□071C13	224
	15	1.3	18	1.3			112	63.467	GST05-3M □□□071C13	224
	14	3.1	17	3.1			120	67.760	GST06-3M □□□071C13	224
	13	1.3	16	1.3			126	71.238	GST05-3M □□□071C13	224
	13	2.9	16	2.9			124	70.156	GST06-3M □□□071C13	224
	12	1.0	14	1.0			143	80.952	GST05-3M □□□071C13	224
	12	2.3	14	2.3			143	80.952	GST06-3M □□□071C13	224
	11	2.4	13	2.4			154	87.267	GST06-3M □□□071C13	224
	10	1.1	12	1.1			162	91.746	GST05-3M □□□071C13	224
	9.4	0.8	11	0.8			175	99.167	GST05-3M □□□071C13	224
	9.4	1.9	11	1.9			175	99.167	GST06-3M □□□071C13	224
	8.5	1.9	10	1.9			194	109.707	GST06-3M □□□071C13	224
	8	0.8	9.7	0.8			205	116.277	GST05-3M □□□071C13	224
	7.5	1.5	9.1	1.5			220	124.667	GST06-3M □□□071C13	224
	7.3	3.2	8.9	3.2			225	127.176	GST07-3M □□□071C13	224
	6.7	2.9	8.1	2.9			246	139.211	GST07-3M □□□071C13	224
	6.6	1.5	8	1.5			250	141.289	GST06-3M □□□071C13	224
	5.9	2.5	7.1	2.5			279	158.194	GST07-3M □□□071C13	224
	5.8	1.2	7	1.2			284	160.556	GST06-3M □□□071C13	224
	5.2	1.2	6.3	1.2			316	179.067	GST06-3M □□□071C13	224
	5.2	2.2	6.3	2.2			318	180.156	GST07-3M □□□071C13	224
	4.6	1.0	5.6	1.0			359	203.485	GST06-3M □□□071C13	224
	4.5	2.0	5.5	2.0			362	204.722	GST07-3M □□□071C13	224
	4	0.9	4.9	0.9			409	231.733	GST06-3M □□□071C13	224
	3.9	1.7	4.8	1.7			418	236.622	GST07-3M □□□071C13	224
	3.7	1.6	4.6	1.6			439	248.458	GST07-3M □□□071C13	224
	3.5	1.5	4.2	1.5			475	268.889	GST07-3M □□□071C13	224
	2.9	1.2	3.5	1.2			576	326.333	GST07-3M □□□071C13	224
	2.9	2.8	3.5	2.8			576	326.333	GST09-3M □□□071C13	224
	2.6	2.5	3.1	2.5			641	363.000	GST09-3M □□□071C13	224
	2.5	1.1	3.1	1.1			648	367.033	GST07-3M □□□071C13	224
	2.3	2.2	2.7	2.2			729	412.500	GST09-3M □□□071C13	224
	2.2	1.0	2.7	1.0			737	417.083	GST07-3M □□□071C13	224

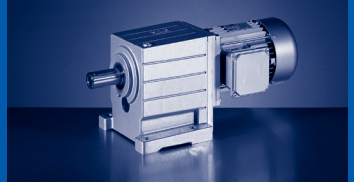

50 Hz: P_N=0.25 kW
60 Hz: P_N=0.31 kW

n_N	2710 r/min		3310 r/min				M_2 [Nm]	i		
f_N	50 Hz		60 Hz							
P_N	0.25 kW		0.31 kW							
	n_2 [r/min]	c	n_2 [r/min]	c						
	1210	4.0	1478	3.8			2.0	2.240	GST04-1M □□□063C31	212
	949	3.8	1159	3.5			3.0	2.857	GST04-1M □□□063C31	212
	616	4.1	752	3.9			4.0	4.400	GST04-1M □□□063C31	212
	478	3.4	584	3.2			5.0	5.667	GST04-1M □□□063C31	212
	423	4.0	517	3.8			6.0	6.400	GST04-2M □□□063C31	218
	377	3.0	461	2.8			6.0	7.182	GST04-1M □□□063C31	212
	301	2.4	368	2.3			8.0	9.000	GST04-1M □□□063C31	212
	275	4.0	336	3.8			8.0	9.856	GST04-2M □□□063C31	218
	229	1.3	279	1.2			10	11.857	GST04-1M □□□063C31	212
	216	3.8	263	3.5			11	12.571	GST04-2M □□□063C31	218
	190	3.8	232	3.5			12	14.286	GST04-2M □□□063C31	218
	140	4.0	171	3.7			17	19.360	GST04-2M □□□063C31	218
	123	3.1	151	2.9			19	22.000	GST04-2M □□□063C31	218
	109	3.1	133	2.9			21	24.933	GST04-2M □□□063C31	218
	96	2.4	117	2.3			24	28.333	GST04-2M □□□063C31	218
	86	2.5	105	2.3			27	31.600	GST04-2M □□□063C31	218
	76	2.0	92	1.8			31	35.909	GST04-2M □□□063C31	218
	68	2.0	84	1.9			34	39.600	GST04-2M □□□063C31	218
	60	1.7	74	1.6			39	45.000	GST04-2M □□□063C31	218
	52	1.6	63	1.5			45	52.171	GST04-2M □□□063C31	218
	46	1.3	56	1.3			51	59.286	GST04-2M □□□063C31	218
	43	2.7	52	2.6			53	63.467	GST05-3M □□□063C31	224
	38	2.8	47	2.7			60	71.238	GST05-3M □□□063C31	224
	34	2.2	41	2.1			68	80.952	GST05-3M □□□063C31	224
	30	2.2	36	2.1			77	91.746	GST05-3M □□□063C31	224
	23	1.7	29	1.7			98	116.277	GST05-3M □□□063C31	224
	22	1.4	27	1.4			105	124.667	GST05-3M □□□063C31	224
	22	3.2	27	3.1			105	124.667	GST06-3M □□□063C31	224
	19	1.4	23	1.3			123	145.714	GST05-3M □□□063C31	224
	19	3.2	23	3.1			119	141.289	GST06-3M □□□063C31	224
	17	1.1	21	1.1			135	160.556	GST05-3M □□□063C31	224
	17	2.5	21	2.5			135	160.556	GST06-3M □□□063C31	224
	15	1.1	19	1.1			151	179.067	GST05-3M □□□063C31	224
	15	2.5	19	2.4			151	179.067	GST06-3M □□□063C31	224
	14	1.1	17	1.0			162	191.973	GST05-3M □□□063C31	224
	13	2.0	16	2.0			171	203.485	GST06-3M □□□063C31	224
	12	0.9	15	0.9			189	224.400	GST05-3M □□□063C31	224
	12	1.9	14	1.9			195	231.733	GST06-3M □□□063C31	224
	11	1.6	13	1.6			215	255.000	GST06-3M □□□063C31	224
	9.3	1.5	11	1.5			245	290.400	GST06-3M □□□063C31	224
	8.2	1.3	10	1.2			278	330.000	GST06-3M □□□063C31	224

50 Hz: P_N=0.25 kW
60 Hz: P_N=0.31 kW

n_N	2710 r/min		3310 r/min				M_2 [Nm]	i		
f_N	50 Hz		60 Hz							
P_N	0.25 kW		0.31 kW							
	n_2 [r/min]	c	n_2 [r/min]	c						
	7.1	1.2	8.7	1.1			322	382.590	GST06-3M □□□063C31	224
	6.2	1.0	7.6	1.0			366	434.762	GST06-3M □□□063C31	224

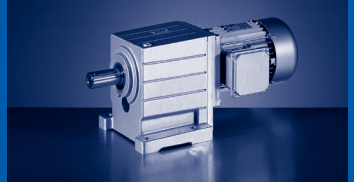

50 Hz: P_N=0.25 kW
60 Hz: P_N=0.31 kW
87 Hz: P_N=0.45 kW

n_N	1370 r/min		1670 r/min		2480 r/min		M_2 [Nm]	i		
f_N	50 Hz		60 Hz		87 Hz					
P_N	0.25 kW		0.31 kW		0.45 kW					
	n_2 [r/min]	c	n_2 [r/min]	c	n_2 [r/min]	c				
	856	4.6	1044	4.4	1550	3.9	3.0	1.600	GST04-1M □□□063C42	212
	669	5.2	816	5.0	1211	4.4	4.0	2.048	GST04-1M □□□063C42	212
	612	4.6	746	4.4	1107	3.9	4.0	2.240	GST05-1M □□□063C42	212
	528	4.1	643	4.0	955	3.5	4.0	2.597	GST03-2M □□□063C42	218
	480	4.8	585	4.6	868	4.1	5.0	2.857	GST04-1M □□□063C42	212
	464	4.6	565	4.4	839	3.9	5.0	2.956	GST04-2M □□□063C42	218
	401	3.3	489	3.2	727	2.8	6.0	3.413	GST03-2M □□□063C42	218
	391	4.2	477	4.0	709	3.5	6.0	3.500	GST04-1M □□□063C42	212
	338	4.6	412	4.4	612	3.9	7.0	4.053	GST04-2M □□□063C42	218
	314	2.8	382	2.7	568	2.4	7.0	4.368	GST03-2M □□□063C42	218
	311	3.3	380	3.2	564	2.8	8.0	4.400	GST04-1M □□□063C42	212
	264	5.2	322	5.0	478	4.4	9.0	5.187	GST04-2M □□□063C42	218
	258	3.0	314	2.9	467	2.5	9.0	5.312	GST03-2M □□□063C42	218
	242	2.6	295	2.5	438	2.2	10	5.667	GST04-1M □□□063C42	212
	230	2.8	280	2.7	416	2.4	10	5.965	GST03-2M □□□063C42	218
	214	4.6	261	4.4	388	3.9	11	6.400	GST05-2M □□□063C42	218
	196	2.5	239	2.4	355	2.1	12	6.982	GST03-2M □□□063C42	218
	191	2.0	233	2.0	345	1.7	12	7.182	GST04-1M □□□063C42	212
	175	2.4	213	2.3	316	2.0	13	7.840	GST03-2M □□□063C42	218
	171	4.4	209	4.2	310	3.7	14	8.000	GST04-2M □□□063C42	218
	154	2.8	188	2.7	279	2.3	15	8.900	GST05-1M □□□063C42	212
	154	3.2	188	3.1	279	2.7	15	8.900	GST06-1M □□□063C42	212
	153	2.2	187	2.1	278	1.8	15	8.935	GST03-2M □□□063C42	218
	152	1.2	186	1.2	276	1.0	15	9.000	GST04-1M □□□063C42	212
	139	3.9	169	3.8	252	3.3	17	9.856	GST04-2M □□□063C42	218
	137	2.0	166	2.0	247	1.7	17	10.033	GST03-2M □□□063C42	218
	122	2.6	148	2.5	220	2.2	19	11.250	GST06-1M □□□063C42	212
	122	3.2	149	3.1	221	2.7	19	11.200	GST04-2M □□□063C42	218
	120	1.4	147	1.3	218	1.2	20	11.375	GST05-1M □□□063C42	212
	120	1.8	146	1.8	217	1.6	19	11.429	GST03-2M □□□063C42	218
	109	3.3	133	3.1	197	2.8	21	12.571	GST04-2M □□□063C42	218
	107	1.7	130	1.7	193	1.5	22	12.833	GST03-2M □□□063C42	218
	96	2.5	117	2.4	174	2.1	24	14.286	GST04-2M □□□063C42	218
	92	1.6	113	1.5	167	1.3	25	14.836	GST03-2M □□□063C42	218
	89	2.7	108	2.7	161	2.6	26	15.400	GST04-2M □□□063C42	218
	82	1.5	100	1.5	149	1.4	28	16.660	GST03-2M □□□063C42	218
	78	2.1	95	2.1	142	2.0	30	17.500	GST04-2M □□□063C42	218
	72	1.3	88	1.3	130	1.3	32	19.013	GST03-2M □□□063C42	218
	71	2.2	86	2.2	128	2.1	33	19.360	GST04-2M □□□063C42	218
	64	1.2	78	1.2	116	1.2	36	21.350	GST03-2M □□□063C42	218
	62	1.7	76	1.7	113	1.6	37	22.000	GST04-2M □□□063C42	218

50 Hz: P_N=0.25 kW
60 Hz: P_N=0.31 kW
87 Hz: P_N=0.45 kW

n_N	1370 r/min		1670 r/min		2480 r/min		M_2 [Nm]	i		
f_N	50 Hz		60 Hz		87 Hz					
P_N	0.25 kW		0.31 kW		0.45 kW					
	n_2 [r/min]	c	n_2 [r/min]	c	n_2 [r/min]	c				
	56	1.1	68	1.1	101	1.0	42	24.595	GST03-2M □□□063C42	218
	55	1.7	67	1.7	100	1.6	42	24.933	GST04-2M □□□063C42	218
	50	1.0	61	1.0	90	0.9	47	27.618	GST03-2M □□□063C42	218
	48	1.3	59	1.3	88	1.3	48	28.333	GST04-2M □□□063C42	218
	48	3.1	59	3.1	88	3.0	48	28.333	GST05-2M □□□063C42	218
	43	0.8	52	0.8			54	32.000	GST03-2M □□□063C42	218
	43	1.4	53	1.4	79	1.3	53	31.600	GST04-2M □□□063C42	218
	43	3.0	52	3.0	77	2.9	55	32.267	GST05-2M □□□063C42	218
	38	1.1	47	1.1	69	1.0	61	35.909	GST04-2M □□□063C42	218
	38	2.2	46	2.2	68	2.1	60	36.267	GST05-3M □□□063C42	224
	37	2.4	46	2.4	68	2.3	62	36.667	GST05-2M □□□063C42	218
	35	1.1	42	1.1	63	1.1	67	39.600	GST04-2M □□□063C42	218
	35	2.5	43	2.5	63	2.4	66	39.160	GST05-2M □□□063C42	218
	35	3.2	43	3.2	63	3.1	66	39.160	GST06-2M □□□063C42	218
	31	2.0	38	2.0	56	2.0	75	44.500	GST05-2M □□□063C42	218
	31	3.2	38	3.2	56	3.2	75	44.500	GST06-2M □□□063C42	218
	30	0.9	37	0.9	55	0.9	76	45.000	GST04-2M □□□063C42	218
	30	1.9	36	1.9	54	1.9	77	46.259	GST05-3M □□□063C42	224
	28	2.6	34	2.6	50	2.6	84	49.500	GST06-2M □□□063C42	218
	27	1.4	33	1.4	50	1.4	85	50.050	GST05-2M □□□063C42	218
	24	1.4	29	1.4	44	1.4	96	56.875	GST05-2M □□□063C42	218
	24	1.6	30	1.6	44	1.6	94	56.667	GST05-3M □□□063C42	224
	24	2.6	30	2.6	44	2.6	95	56.250	GST06-2M □□□063C42	218
	22	1.4	26	1.4	39	1.4	106	63.467	GST05-3M □□□063C42	224
	20	3.1	24	3.1	35	3.1	117	70.156	GST06-3M □□□063C42	224
	20	3.2	25	3.2	37	3.2	113	67.760	GST06-3M □□□063C42	224
	19	1.4	23	1.4	35	1.4	119	71.238	GST05-3M □□□063C42	224
	17	1.1	21	1.1	31	1.1	135	80.952	GST05-3M □□□063C42	224
	17	2.5	21	2.5	31	2.5	135	80.952	GST06-3M □□□063C42	224
	16	2.5	19	2.5	28	2.5	145	87.267	GST06-3M □□□063C42	224
	15	1.1	18	1.1	27	1.1	153	91.746	GST05-3M □□□063C42	224
	14	0.9	17	0.9	25	0.9	165	99.167	GST05-3M □□□063C42	224
	14	2.0	17	2.0	25	2.0	165	99.167	GST06-3M □□□063C42	224
	13	2.1	15	2.1	23	2.1	183	109.707	GST06-3M □□□063C42	224
	12	0.9	14	0.9	21	0.9	194	116.277	GST05-3M □□□063C42	224
	11	1.6	13	1.6	20	1.6	208	124.667	GST06-3M □□□063C42	224
	9.8	3.0	12	3.0	18	3.0	232	139.211	GST07-3M □□□063C42	224
	9.7	1.6	12	1.6	18	1.6	235	141.289	GST06-3M □□□063C42	224
	8.7	2.7	11	2.7	16	2.7	263	158.194	GST07-3M □□□063C42	224
	8.5	1.3	10	1.3	15	1.3	267	160.556	GST06-3M □□□063C42	224
	7.7	1.3	9.3	1.3	14	1.3	298	179.067	GST06-3M □□□063C42	224

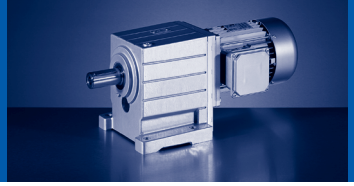

50 Hz: P_N=0.25 kW
60 Hz: P_N=0.31 kW
87 Hz: P_N=0.45 kW

n_N	1370 r/min		1670 r/min		2480 r/min		M_2 [Nm]	i		
f_N	50 Hz		60 Hz		87 Hz					
P_N	0.25 kW		0.31 kW		0.45 kW					
	n_2 [r/min]	c	n_2 [r/min]	c	n_2 [r/min]	c				
	7.6	2.4	9.3	2.4	14	2.4	300	180.156	GST07-3M □□□063C42	224
	6.7	1.0	8.2	1.0	12	1.0	339	203.485	GST06-3M □□□063C42	224
	6.7	2.1	8.2	2.1	12	2.1	341	204.722	GST07-3M □□□063C42	224
	5.9	1.0	7.2	1.0	11	1.0	386	231.733	GST06-3M □□□063C42	224
	5.8	1.8	7.1	1.8	11	1.8	394	236.622	GST07-3M □□□063C42	224
	5.5	1.7	6.7	1.7	10	1.7	414	248.458	GST07-3M □□□063C42	224
	5.4	0.8	6.6	0.8	9.7	0.8	425	255.000	GST06-3M □□□063C42	224
	5.4	3.2	6.6	3.2	9.8	3.2	420	252.167	GST09-3M □□□063C42	224
	5.1	1.6	6.2	1.6	9.2	1.6	448	268.889	GST07-3M □□□063C42	224
	4.2	1.3	5.1	1.3	7.6	1.3	544	326.333	GST07-3M □□□063C42	224
	4.2	3.0	5.1	3.0	7.6	3.0	544	326.333	GST09-3M □□□063C42	224
	3.8	2.6	4.6	2.6	6.8	2.6	605	363.000	GST09-3M □□□063C42	224
	3.7	1.2	4.6	1.2	6.8	1.2	611	367.033	GST07-3M □□□063C42	224
	3.3	1.0	4	1.0	6	1.0	695	417.083	GST07-3M □□□063C42	224
	3.3	2.4	4.1	2.4	6	2.4	687	412.500	GST09-3M □□□063C42	224

50 Hz: P_N=0.25 kW
60 Hz: P_N=0.3 kW

n_N	930 r/min		1130 r/min				M_2 [Nm]	i		
f_N	50 Hz		60 Hz							
P_N	0.25 kW		0.3 kW							
	n_2 [r/min]	c	n_2 [r/min]	c						
	581	3.9	706	3.9			4.0	1.600	GST04-1M □□□071C33	212
	454	4.4	552	4.4			5.0	2.048	GST04-1M □□□071C33	212
	415	3.9	505	3.9			6.0	2.240	GST05-1M □□□071C33	212
	326	3.5	396	3.5			7.0	2.857	GST04-1M □□□071C33	212
	315	3.9	382	3.9			7.0	2.956	GST04-2M □□□071C33	218
	266	2.8	323	2.8			9.0	3.500	GST04-1M □□□071C33	212
	229	3.9	279	3.9			10	4.053	GST04-2M □□□071C33	218
	211	2.3	257	2.3			11	4.400	GST04-1M □□□071C33	212
	179	3.9	218	3.9			13	5.187	GST04-2M □□□071C33	218
	164	1.7	199	1.7			14	5.667	GST04-1M □□□071C33	212
	164	3.1	199	3.1			14	5.667	GST05-1M □□□071C33	212
	145	3.5	177	3.5			16	6.400	GST04-2M □□□071C33	218
	132	3.2	161	3.2			18	7.040	GST04-2M □□□071C33	218
	130	1.4	157	1.4			18	7.182	GST04-1M □□□071C33	212
	127	2.5	154	2.5			19	7.333	GST05-1M □□□071C33	212
	127	3.1	154	3.1			19	7.333	GST06-1M □□□071C33	212
	116	3.0	141	3.0			20	8.000	GST04-2M □□□071C33	218
	105	1.9	127	1.9			23	8.900	GST05-1M □□□071C33	212
	105	2.7	127	2.7			23	8.900	GST06-1M □□□071C33	212
	103	1.0	126	1.0			23	9.000	GST04-1M □□□071C33	212
	103	2.8	125	2.8			22	9.010	GST04-2M □□□071C33	218
	94	2.6	115	2.6			25	9.856	GST04-2M □□□071C33	218
	83	2.2	101	2.2			28	11.200	GST04-2M □□□071C33	218
	83	2.2	100	2.2			28	11.250	GST06-1M □□□071C33	212
	82	1.1	99	1.1			29	11.375	GST05-1M □□□071C33	212
	74	2.2	90	2.2			31	12.571	GST04-2M □□□071C33	218
	65	1.7	79	1.7			36	14.286	GST04-2M □□□071C33	218
	65	3.1	79	3.1			36	14.356	GST05-2M □□□071C33	218
	60	1.8	73	1.8			38	15.400	GST04-2M □□□071C33	218
	57	3.1	70	3.1			40	16.190	GST05-2M □□□071C33	218
	53	1.4	65	1.4			44	17.500	GST04-2M □□□071C33	218
	48	1.5	58	1.5			48	19.360	GST04-2M □□□071C33	218
	46	3.2	56	3.2			50	20.044	GST05-2M □□□071C33	218
	42	1.1	51	1.1			55	22.000	GST04-2M □□□071C33	218
	41	2.5	50	2.5			57	22.778	GST05-2M □□□071C33	218
	37	1.2	45	1.2			62	24.933	GST04-2M □□□071C33	218
	37	2.6	45	2.6			62	24.933	GST05-2M □□□071C33	218
	33	0.9	40	0.9			71	28.333	GST04-2M □□□071C33	218
	33	2.1	40	2.1			71	28.333	GST05-2M □□□071C33	218
	29	0.9	36	0.9			79	31.600	GST04-2M □□□071C33	218
	29	2.0	35	2.0			80	32.267	GST05-2M □□□071C33	218

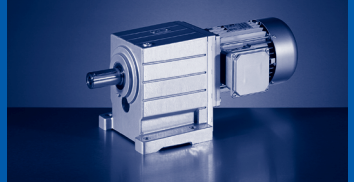

50 Hz: P_N=0.25 kW
60 Hz: P_N=0.3 kW

n_N	930 r/min		1130 r/min				M_2 [Nm]	i		
f_N	50 Hz		60 Hz							
P_N	0.25 kW		0.3 kW							
	n_2 [r/min]	c	n_2 [r/min]	c						
	29	3.1	35	3.1			80	32.267	GST06-2M □□□071C33	218
	26	1.5	31	1.5			89	36.267	GST05-3M □□□071C33	224
	25	1.6	31	1.6			91	36.667	GST05-2M □□□071C33	218
	25	3.1	31	3.1			91	36.667	GST06-2M □□□071C33	218
	24	1.7	29	1.7			98	39.160	GST05-2M □□□071C33	218
	24	2.7	29	2.7			98	39.160	GST06-2M □□□071C33	218
	21	1.3	25	1.3			111	44.500	GST05-2M □□□071C33	218
	21	2.7	25	2.7			111	44.500	GST06-2M □□□071C33	218
	21	3.1	26	3.1			108	44.000	GST06-3M □□□071C33	224
	20	1.3	24	1.3			114	46.259	GST05-3M □□□071C33	224
	19	1.1	23	1.1			125	50.050	GST05-2M □□□071C33	218
	19	2.2	23	2.2			123	49.500	GST06-2M □□□071C33	218
	18	2.6	22	2.6			125	51.022	GST06-3M □□□071C33	224
	17	2.2	20	2.2			140	56.250	GST06-2M □□□071C33	218
	17	2.6	21	2.6			132	53.900	GST06-3M □□□071C33	224
	16	1.1	20	1.1			139	56.667	GST05-3M □□□071C33	224
	16	1.1	20	1.1			142	56.875	GST05-2M □□□071C33	218
	15	0.9	18	0.9			156	63.467	GST05-3M □□□071C33	224
	14	2.2	17	2.2			166	67.760	GST06-3M □□□071C33	224
	13	1.0	16	1.0			175	71.238	GST05-3M □□□071C33	224
	13	2.1	16	2.1			172	70.156	GST06-3M □□□071C33	224
	12	1.7	14	1.7			199	80.952	GST06-3M □□□071C33	224
	11	1.7	13	1.7			214	87.267	GST06-3M □□□071C33	224
	9.4	1.4	11	1.4			243	99.167	GST06-3M □□□071C33	224
	8.5	1.4	10	1.4			269	109.707	GST06-3M □□□071C33	224
	8.3	2.6	10	2.6			275	111.915	GST07-3M □□□071C33	224
	7.5	1.1	9.1	1.1			306	124.667	GST06-3M □□□071C33	224
	7.3	2.3	8.9	2.3			312	127.176	GST07-3M □□□071C33	224
	6.7	2.1	8.1	2.1			342	139.211	GST07-3M □□□071C33	224
	6.6	1.1	8	1.1			347	141.289	GST06-3M □□□071C33	224
	5.9	1.8	7.1	1.8			388	158.194	GST07-3M □□□071C33	224
	5.8	0.9	7	0.9			394	160.556	GST06-3M □□□071C33	224
	5.2	0.9	6.3	0.9			439	179.067	GST06-3M □□□071C33	224
	5.2	1.6	6.3	1.6			442	180.156	GST07-3M □□□071C33	224
	5.1	3.1	6.2	3.1			449	182.844	GST09-3M □□□071C33	224
	4.5	1.4	5.5	1.4			502	204.722	GST07-3M □□□071C33	224
	4.5	3.1	5.4	3.1			510	207.778	GST09-3M □□□071C33	224
	3.9	1.2	4.8	1.2			581	236.622	GST07-3M □□□071C33	224
	3.9	2.8	4.8	2.8			581	236.622	GST09-3M □□□071C33	224
	3.7	1.2	4.6	1.2			610	248.458	GST07-3M □□□071C33	224
	3.7	2.6	4.5	2.6			619	252.167	GST09-3M □□□071C33	224

50 Hz: P_N=0.25 kW
60 Hz: P_N=0.3 kW

n_N	930 r/min		1130 r/min				M_2 [Nm]	i		
f_N	50 Hz		60 Hz							
P_N	0.25 kW		0.3 kW							
	n_2 [r/min]	c	n_2 [r/min]	c						
	3.5	1.1	4.2	1.1			660	268.889	GST07-3M □□□071C33	224
	3.5	2.5	4.2	2.5			660	268.889	GST09-3M □□□071C33	224
	2.9	0.9	3.5	0.9			801	326.333	GST07-3M □□□071C33	224
	2.9	2.0	3.5	2.0			801	326.333	GST09-3M □□□071C33	224
	2.6	1.8	3.1	1.8			891	363.000	GST09-3M □□□071C33	224
	2.3	1.6	2.7	1.6			1012	412.500	GST09-3M □□□071C33	224

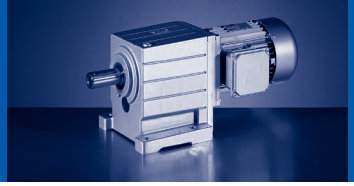

50 Hz: P_N=0.37 kW
60 Hz: P_N=0.45 kW

n_N	2720 r/min		3320 r/min				M_2 [Nm]	i		
f_N	50 Hz		60 Hz							
P_N	0.37 kW		0.45 kW							
	n_2 [r/min]	c	n_2 [r/min]	c						
	952	5.6	1162	5.3			4.0	2.857	GST04-1M □□□071C11	212
	777	4.6	949	4.3			5.0	3.500	GST04-1M □□□071C11	212
	618	3.6	755	3.4			6.0	4.400	GST04-1M □□□071C11	212
	480	2.8	586	2.7			7.0	5.667	GST04-1M □□□071C11	212
	425	5.6	519	5.2			8.0	6.400	GST04-2M □□□071C11	218
	379	2.2	462	2.1			9.0	7.182	GST04-1M □□□071C11	212
	340	4.8	415	4.5			10	8.000	GST04-2M □□□071C11	218
	306	3.0	373	2.8			11	8.900	GST05-1M □□□071C11	212
	302	1.7	369	1.6			12	9.000	GST04-1M □□□071C11	212
	276	4.3	337	4.0			12	9.856	GST04-2M □□□071C11	218
	239	1.7	292	1.6			15	11.375	GST05-1M □□□071C11	212
	216	3.6	264	3.4			16	12.571	GST04-2M □□□071C11	218
	190	2.8	232	2.6			18	14.286	GST04-2M □□□071C11	218
	177	3.3	216	3.1			19	15.400	GST04-2M □□□071C11	218
	155	2.6	190	2.4			22	17.500	GST04-2M □□□071C11	218
	141	2.7	172	2.5			24	19.360	GST04-2M □□□071C11	218
	124	2.1	151	2.0			28	22.000	GST04-2M □□□071C11	218
	109	2.1	133	2.0			31	24.933	GST04-2M □□□071C11	218
	96	1.7	117	1.6			36	28.333	GST04-2M □□□071C11	218
	86	1.7	105	1.6			40	31.600	GST04-2M □□□071C11	218
	76	1.3	93	1.2			45	35.909	GST04-2M □□□071C11	218
	75	2.8	92	2.6			45	36.267	GST05-3M □□□071C11	224
	74	3.0	91	2.8			46	36.667	GST05-2M □□□071C11	218
	70	3.1	85	2.9			49	39.160	GST05-2M □□□071C11	218
	69	1.4	84	1.3			50	39.600	GST04-2M □□□071C11	218
	61	2.7	75	2.6			56	44.500	GST05-2M □□□071C11	218
	60	1.2	74	1.1			57	45.000	GST04-2M □□□071C11	218
	59	2.5	72	2.5			57	46.259	GST05-3M □□□071C11	224
	54	2.2	66	2.1			63	50.050	GST05-2M □□□071C11	218
	48	2.1	58	2.0			72	56.875	GST05-2M □□□071C11	218
	48	2.2	59	2.1			70	56.667	GST05-3M □□□071C11	224
	43	1.9	52	1.8			79	63.467	GST05-3M □□□071C11	224
	38	1.9	47	1.8			88	71.238	GST05-3M □□□071C11	224
	34	1.5	41	1.4			101	80.952	GST05-3M □□□071C11	224
	30	1.5	36	1.5			114	91.746	GST05-3M □□□071C11	224
	27	1.2	34	1.2			123	99.167	GST05-3M □□□071C11	224
	27	2.7	34	2.6			123	99.167	GST06-3M □□□071C11	224
	25	2.8	30	2.7			136	109.707	GST06-3M □□□071C11	224
	23	1.2	29	1.1			144	116.277	GST05-3M □□□071C11	224
	22	1.0	27	0.9			155	124.667	GST05-3M □□□071C11	224
	22	2.2	27	2.1			155	124.667	GST06-3M □□□071C11	224

50 Hz: P_N=0.37 kW
60 Hz: P_N=0.45 kW

n_N	2720 r/min		3320 r/min				M_2 [Nm]	i		
f_N	50 Hz		60 Hz							
P_N	0.37 kW		0.45 kW							
	n_2 [r/min]	c	n_2 [r/min]	c						
	19	0.9	23	0.9			181	145.714	GST05-3M □□□071C11	224
	19	2.1	24	2.1			175	141.289	GST06-3M □□□071C11	224
	17	1.7	21	1.7			199	160.556	GST06-3M □□□071C11	224
	15	1.7	19	1.6			222	179.067	GST06-3M □□□071C11	224
	15	3.2	18	3.1			224	180.156	GST07-3M □□□071C11	224
	13	1.4	16	1.3			253	203.485	GST06-3M □□□071C11	224
	13	2.8	16	2.7			254	204.722	GST07-3M □□□071C11	224
	12	1.3	14	1.3			288	231.733	GST06-3M □□□071C11	224
	12	2.4	14	2.3			294	236.622	GST07-3M □□□071C11	224
	11	1.1	13	1.1			317	255.000	GST06-3M □□□071C11	224
	11	2.3	13	2.2			308	248.458	GST07-3M □□□071C11	224
	10	2.1	12	2.1			334	268.889	GST07-3M □□□071C11	224
	9.4	1.0	11	1.0			361	290.400	GST06-3M □□□071C11	224
	8.3	1.8	10	1.7			405	326.333	GST07-3M □□□071C11	224
	8.2	0.9	10	0.8			410	330.000	GST06-3M □□□071C11	224
	7.4	1.6	9.1	1.5			456	367.033	GST07-3M □□□071C11	224
	6.6	3.2	8.1	3.1			512	412.500	GST09-3M □□□071C11	224
	6.5	1.4	8	1.3			518	417.083	GST07-3M □□□071C11	224

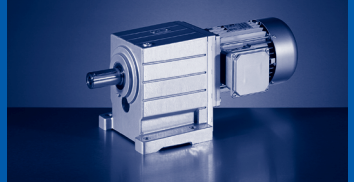

50 Hz: P_N=0.37 kW
60 Hz: P_N=0.45 kW
87 Hz: P_N=0.66 kW

n_N	1410 r/min		1710 r/min		2520 r/min		M_2 [Nm]	i		
f_N	50 Hz		60 Hz		87 Hz					
P_N	0.37 kW		0.45 kW		0.66 kW					
	n_2 [r/min]	c	n_2 [r/min]	c	n_2 [r/min]	c				
	881	4.0	1069	3.8	1575	3.3	4.0	1.600	GST04-1M □□□071C32	212
	689	4.5	835	4.3	1231	3.8	5.0	2.048	GST04-1M □□□071C32	212
	630	4.0	763	3.8	1125	3.3	6.0	2.240	GST05-1M □□□071C32	212
	543	2.9	658	2.7	970	2.4	6.0	2.597	GST03-2M □□□071C32	218
	494	3.6	599	3.4	882	3.0	7.0	2.857	GST04-1M □□□071C32	212
	477	4.0	579	3.8	853	3.3	7.0	2.956	GST04-2M □□□071C32	218
	413	2.3	501	2.2	738	2.0	8.0	3.413	GST03-2M □□□071C32	218
	403	2.9	489	2.8	720	2.4	9.0	3.500	GST04-1M □□□071C32	212
	348	4.0	422	3.8	622	3.3	10	4.053	GST04-2M □□□071C32	218
	323	2.0	392	1.9	577	1.7	11	4.368	GST03-2M □□□071C32	218
	321	2.3	389	2.2	573	1.9	11	4.400	GST04-1M □□□071C32	212
	272	4.0	330	3.8	486	3.3	13	5.187	GST04-2M □□□071C32	218
	265	2.1	322	2.0	474	1.7	13	5.312	GST03-2M □□□071C32	218
	249	1.8	302	1.7	445	1.5	14	5.667	GST04-1M □□□071C32	212
	249	3.2	302	3.0	445	2.7	14	5.667	GST05-1M □□□071C32	212
	236	2.0	287	1.9	422	1.7	15	5.965	GST03-2M □□□071C32	218
	220	3.5	267	3.4	394	3.0	16	6.400	GST04-2M □□□071C32	218
	202	1.8	245	1.7	361	1.5	17	6.982	GST03-2M □□□071C32	218
	196	1.4	238	1.4	351	1.2	18	7.182	GST04-1M □□□071C32	212
	192	2.6	233	2.5	344	2.2	18	7.333	GST05-1M □□□071C32	212
	192	3.2	233	3.0	344	2.7	18	7.333	GST06-1M □□□071C32	212
	180	1.7	218	1.6	321	1.4	19	7.840	GST03-2M □□□071C32	218
	176	3.0	214	2.9	315	2.5	19	8.000	GST04-2M □□□071C32	218
	158	1.5	191	1.4	282	1.3	22	8.935	GST03-2M □□□071C32	218
	158	1.9	192	1.8	283	1.6	22	8.900	GST05-1M □□□071C32	212
	158	2.8	192	2.7	283	2.3	22	8.900	GST06-1M □□□071C32	212
	157	1.1	190	1.0	280	0.9	22	9.000	GST04-1M □□□071C32	212
	157	2.9	190	2.7	280	2.4	22	9.010	GST04-2M □□□071C32	218
	143	2.7	174	2.6	256	2.3	24	9.856	GST04-2M □□□071C32	218
	141	1.4	170	1.4	251	1.2	24	10.033	GST03-2M □□□071C32	218
	126	2.2	153	2.1	225	1.9	27	11.200	GST04-2M □□□071C32	218
	125	2.2	152	2.2	224	1.9	28	11.250	GST06-1M □□□071C32	212
	124	1.1	150	1.1	222	0.9	28	11.375	GST05-1M □□□071C32	212
	123	1.3	150	1.2	221	1.1	28	11.429	GST03-2M □□□071C32	218
	112	2.3	136	2.2	201	1.9	31	12.571	GST04-2M □□□071C32	218
	110	1.2	133	1.2	196	1.0	31	12.833	GST03-2M □□□071C32	218
	99	1.8	120	1.7	176	1.5	35	14.286	GST04-2M □□□071C32	218
	98	3.2	119	3.0	176	2.7	35	14.356	GST05-2M □□□071C32	218
	95	1.1	115	1.0	170	0.9	36	14.836	GST03-2M □□□071C32	218
	92	1.9	111	1.9	164	1.8	37	15.400	GST04-2M □□□071C32	218
	87	3.2	106	3.2	156	3.0	39	16.190	GST05-2M □□□071C32	218

50 Hz: P_N=0.37 kW
60 Hz: P_N=0.45 kW
87 Hz: P_N=0.66 kW

n_N	1410 r/min		1710 r/min		2520 r/min		M_2 [Nm]	i		
f_N	50 Hz		60 Hz		87 Hz					
P_N	0.37 kW		0.45 kW		0.66 kW					
	n_2 [r/min]	c	n_2 [r/min]	c	n_2 [r/min]	c				
	85	1.0	103	1.0	151	1.0	41	16.660	GST03-2M □□□071C32	218
	81	1.5	98	1.5	144	1.4	43	17.500	GST04-2M □□□071C32	218
	74	0.9	90	0.9	133	0.9	46	19.013	GST03-2M □□□071C32	218
	73	1.5	88	1.5	130	1.4	47	19.360	GST04-2M □□□071C32	218
	66	0.9	80	0.9	118	0.8	52	21.350	GST03-2M □□□071C32	218
	64	1.2	78	1.2	115	1.1	54	22.000	GST04-2M □□□071C32	218
	62	2.6	75	2.6	111	2.5	55	22.778	GST05-2M □□□071C32	218
	57	1.2	69	1.2	101	1.1	61	24.933	GST04-2M □□□071C32	218
	57	2.7	69	2.7	101	2.6	61	24.933	GST05-2M □□□071C32	218
	50	0.9	60	0.9	89	0.9	69	28.333	GST04-2M □□□071C32	218
	50	2.1	60	2.1	89	2.0	69	28.333	GST05-2M □□□071C32	218
	45	0.9	54	0.9	80	0.9	77	31.600	GST04-2M □□□071C32	218
	44	2.1	53	2.1	78	2.0	78	32.267	GST05-2M □□□071C32	218
	44	3.2	53	3.2	78	3.0	78	32.267	GST06-2M □□□071C32	218
	39	1.6	47	1.6	70	1.5	87	36.267	GST05-3M □□□071C32	224
	39	1.7	47	1.7	69	1.6	89	36.667	GST05-2M □□□071C32	218
	39	3.2	47	3.2	69	3.0	89	36.667	GST06-2M □□□071C32	218
	36	1.7	44	1.7	64	1.7	95	39.160	GST05-2M □□□071C32	218
	36	2.8	44	2.8	64	2.7	95	39.160	GST06-2M □□□071C32	218
	32	1.4	38	1.4	57	1.4	108	44.500	GST05-2M □□□071C32	218
	32	2.8	38	2.8	57	2.8	108	44.500	GST06-2M □□□071C32	218
	32	3.2	39	3.2	57	3.2	105	44.000	GST06-3M □□□071C32	224
	31	1.3	37	1.3	55	1.3	111	46.259	GST05-3M □□□071C32	224
	29	2.2	35	2.2	51	2.2	120	49.500	GST06-2M □□□071C32	218
	28	1.1	34	1.1	50	1.1	122	50.050	GST05-2M □□□071C32	218
	28	2.7	34	2.7	49	2.7	122	51.022	GST06-3M □□□071C32	224
	26	2.7	32	2.7	47	2.7	129	53.900	GST06-3M □□□071C32	224
	25	1.1	30	1.1	45	1.1	136	56.667	GST05-3M □□□071C32	224
	25	1.1	30	1.1	44	1.1	138	56.875	GST05-2M □□□071C32	218
	25	2.2	30	2.2	45	2.2	137	56.250	GST06-2M □□□071C32	218
	22	1.0	27	1.0	40	1.0	152	63.467	GST05-3M □□□071C32	224
	21	2.3	25	2.3	37	2.3	162	67.760	GST06-3M □□□071C32	224
	20	1.0	24	1.0	35	1.0	171	71.238	GST05-3M □□□071C32	224
	20	2.1	24	2.1	36	2.1	168	70.156	GST06-3M □□□071C32	224
	17	1.7	21	1.7	31	1.7	194	80.952	GST06-3M □□□071C32	224
	16	1.8	20	1.8	29	1.8	209	87.267	GST06-3M □□□071C32	224
	14	1.4	17	1.4	25	1.4	238	99.167	GST06-3M □□□071C32	224
	13	1.4	16	1.4	23	1.4	263	109.707	GST06-3M □□□071C32	224
	13	2.6	15	2.6	23	2.6	268	111.915	GST07-3M □□□071C32	224
	11	1.1	14	1.1	20	1.1	299	124.667	GST06-3M □□□071C32	224
	11	2.3	13	2.3	20	2.3	305	127.176	GST07-3M □□□071C32	224

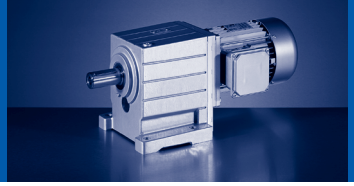

50 Hz: P_N=0.37 kW
60 Hz: P_N=0.45 kW
87 Hz: P_N=0.66 kW

n_N	1410 r/min		1710 r/min		2520 r/min		M_2 [Nm]	i		
f_N	50 Hz		60 Hz		87 Hz					
P_N	0.37 kW		0.45 kW		0.66 kW					
	n_2 [r/min]	c	n_2 [r/min]	c	n_2 [r/min]	c				
	10	1.1	12	1.1	18	1.1	338	141.289	GST06-3M □□□071C32	224
	10	2.1	12	2.1	18	2.1	333	139.211	GST07-3M □□□071C32	224
	8.9	1.9	11	1.9	16	1.9	379	158.194	GST07-3M □□□071C32	224
	8.8	0.9	11	0.9	16	0.9	385	160.556	GST06-3M □□□071C32	224
	7.9	0.9	9.6	0.9	14	0.9	429	179.067	GST06-3M □□□071C32	224
	7.8	1.6	9.5	1.6	14	1.6	431	180.156	GST07-3M □□□071C32	224
	7.7	3.2	9.4	3.2	14	3.2	438	182.844	GST09-3M □□□071C32	224
	6.9	1.5	8.4	1.5	12	1.5	490	204.722	GST07-3M □□□071C32	224
	6.8	3.2	8.2	3.2	12	3.2	498	207.778	GST09-3M □□□071C32	224
	6	1.3	7.2	1.3	11	1.3	567	236.622	GST07-3M □□□071C32	224
	6	2.9	7.2	2.9	11	2.9	567	236.622	GST09-3M □□□071C32	224
	5.7	1.2	6.9	1.2	10	1.2	595	248.458	GST07-3M □□□071C32	224
	5.6	2.7	6.8	2.7	10	2.7	604	252.167	GST09-3M □□□071C32	224
	5.2	1.1	6.4	1.1	9.4	1.1	644	268.889	GST07-3M □□□071C32	224
	5.2	2.5	6.4	2.5	9.4	2.5	644	268.889	GST09-3M □□□071C32	224
	4.3	0.9	5.2	0.9	7.7	0.9	782	326.333	GST07-3M □□□071C32	224
	4.3	2.1	5.2	2.1	7.7	2.1	782	326.333	GST09-3M □□□071C32	224
	3.9	1.9	4.7	1.9	6.9	1.9	869	363.000	GST09-3M □□□071C32	224
	3.8	0.8	4.7	0.8	6.9	0.8	879	367.033	GST07-3M □□□071C32	224
	3.4	1.6	4.2	1.6	6.1	1.6	988	412.500	GST09-3M □□□071C32	224

50 Hz: P_N=0.37 kW
60 Hz: P_N=0.45 kW

n_N	950 r/min		1150 r/min				M_2 [Nm]	i		
f_N	50 Hz		60 Hz							
P_N	0.37 kW		0.45 kW							
	n_2 [r/min]	c	n_2 [r/min]	c						
	594	3.3	719	3.3			6.0	1.600	GST04-1M □□□080C13	212
	464	3.0	562	3.0			8.0	2.048	GST04-1M □□□080C13	212
	424	3.0	513	3.0			8.0	2.240	GST04-1M □□□080C13	212
	333	2.4	403	2.4			11	2.857	GST04-1M □□□080C13	212
	321	3.7	389	3.7			11	2.956	GST04-2M □□□080C13	218
	271	2.0	329	2.0			13	3.500	GST04-1M □□□080C13	212
	234	3.1	284	3.1			15	4.053	GST04-2M □□□080C13	218
	216	1.6	261	1.6			16	4.400	GST04-1M □□□080C13	212
	209	3.2	252	3.2			17	4.556	GST05-1M □□□080C13	212
	208	2.9	252	2.9			17	4.571	GST04-2M □□□080C13	218
	183	2.7	222	2.7			19	5.187	GST04-2M □□□080C13	218
	168	1.2	203	1.2			21	5.667	GST04-1M □□□080C13	212
	168	2.6	203	2.6			21	5.667	GST05-1M □□□080C13	212
	162	2.5	197	2.5			21	5.850	GST04-2M □□□080C13	218
	148	2.4	180	2.4			23	6.400	GST04-2M □□□080C13	218
	135	2.2	163	2.2			25	7.040	GST04-2M □□□080C13	218
	130	1.7	157	1.7			27	7.333	GST05-1M □□□080C13	212
	119	2.0	144	2.0			29	8.000	GST04-2M □□□080C13	218
	107	1.3	129	1.3			33	8.900	GST05-1M □□□080C13	212
	107	2.6	129	2.6			33	8.900	GST06-1M □□□080C13	212
	105	1.9	128	1.9			33	9.010	GST04-2M □□□080C13	218
	96	1.8	117	1.8			36	9.856	GST04-2M □□□080C13	218
	85	1.5	103	1.5			40	11.200	GST04-2M □□□080C13	218
	85	3.2	103	3.2			40	11.200	GST05-2M □□□080C13	218
	84	1.5	102	1.5			41	11.250	GST06-1M □□□080C13	212
	84	2.8	102	2.8			41	11.250	GST07-1M □□□080C13	212
	76	1.5	92	1.5			45	12.571	GST04-2M □□□080C13	218
	73	2.9	88	2.9			47	13.016	GST05-2M □□□080C13	218
	67	1.2	81	1.2			52	14.286	GST04-2M □□□080C13	218
	66	2.7	80	2.7			52	14.356	GST05-2M □□□080C13	218
	62	1.3	75	1.3			56	15.400	GST04-2M □□□080C13	218
	59	2.5	71	2.5			58	16.190	GST05-2M □□□080C13	218
	54	1.0	66	1.0			63	17.500	GST04-2M □□□080C13	218
	54	2.3	66	2.3			63	17.500	GST05-2M □□□080C13	218
	49	1.0	59	1.0			70	19.360	GST04-2M □□□080C13	218
	47	2.2	57	2.2			72	20.044	GST05-2M □□□080C13	218
	42	1.8	51	1.8			82	22.778	GST05-2M □□□080C13	218
	38	1.8	46	1.8			90	24.933	GST05-2M □□□080C13	218
	34	1.4	41	1.4			102	28.333	GST05-2M □□□080C13	218
	34	3.1	41	3.1			102	28.333	GST06-2M □□□080C13	218
	29	1.4	36	1.4			116	32.267	GST05-2M □□□080C13	218

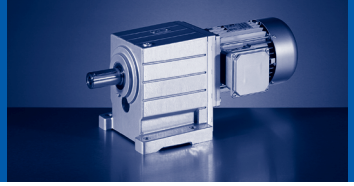

50 Hz: P_N=0.37 kW
60 Hz: P_N=0.45 kW

n_N	950 r/min		1150 r/min				M_2 [Nm]	i		
f_N	50 Hz		60 Hz							
P_N	0.37 kW		0.45 kW							
	n_2 [r/min]	c	n_2 [r/min]	c						
	29	3.1	36	3.1			116	32.267	GST06-2M □□□080C13	218
	26	1.0	32	1.0			129	36.267	GST05-3M □□□080C13	224
	26	1.1	31	1.1			132	36.667	GST05-2M □□□080C13	218
	26	2.4	31	2.4			132	36.667	GST06-2M □□□080C13	218
	24	1.2	29	1.2			141	39.160	GST05-2M □□□080C13	218
	24	2.3	29	2.3			139	39.200	GST06-3M □□□080C13	224
	24	2.6	29	2.6			141	39.160	GST06-2M □□□080C13	218
	22	2.1	26	2.1			156	44.000	GST06-3M □□□080C13	224
	21	0.9	26	0.9			161	44.500	GST05-2M □□□080C13	218
	21	0.9	25	0.9			164	46.259	GST05-3M □□□080C13	224
	21	2.0	26	2.0			161	44.500	GST06-2M □□□080C13	218
	19	1.6	23	1.6			179	49.500	GST06-2M □□□080C13	218
	19	1.8	23	1.8			181	51.022	GST06-3M □□□080C13	224
	19	2.8	23	2.8			179	49.500	GST07-2M □□□080C13	218
	18	1.8	21	1.8			192	53.900	GST06-3M □□□080C13	224
	17	1.6	20	1.6			203	56.250	GST06-2M □□□080C13	218
	17	2.8	20	2.8			203	56.250	GST07-2M □□□080C13	218
	15	3.1	18	3.1			231	65.079	GST07-3M □□□080C13	224
	14	1.4	16	1.4			249	70.156	GST06-3M □□□080C13	224
	14	1.5	17	1.5			241	67.760	GST06-3M □□□080C13	224
	14	2.8	16	2.8			249	70.156	GST07-3M □□□080C13	224
	12	1.2	14	1.2			288	80.952	GST06-3M □□□080C13	224
	12	2.5	14	2.5			284	79.762	GST07-3M □□□080C13	224
	11	1.2	13	1.2			310	87.267	GST06-3M □□□080C13	224
	11	2.3	13	2.3			306	85.983	GST07-3M □□□080C13	224
	9.7	2.0	12	2.0			347	97.708	GST07-3M □□□080C13	224
	9.6	1.0	12	1.0			353	99.167	GST06-3M □□□080C13	224
	8.7	1.0	11	1.0			390	109.707	GST06-3M □□□080C13	224
	8.5	1.8	10	1.8			398	111.915	GST07-3M □□□080C13	224
	7.5	1.6	9	1.6			452	127.176	GST07-3M □□□080C13	224
	6.8	1.4	8.3	1.4			495	139.211	GST07-3M □□□080C13	224
	6.7	3.2	8.1	3.2			502	141.289	GST09-3M □□□080C13	224
	6	1.3	7.3	1.3			562	158.194	GST07-3M □□□080C13	224
	5.9	2.8	7.2	2.8			571	160.556	GST09-3M □□□080C13	224
	5.3	1.1	6.4	1.1			640	180.156	GST07-3M □□□080C13	224
	5.2	2.5	6.3	2.5			650	182.844	GST09-3M □□□080C13	224
	4.6	1.0	5.6	1.0			728	204.722	GST07-3M □□□080C13	224
	4.6	2.2	5.5	2.2			739	207.778	GST09-3M □□□080C13	224
	4	0.8	4.9	0.8			841	236.622	GST07-3M □□□080C13	224
	4	1.9	4.9	1.9			841	236.622	GST09-3M □□□080C13	224
	4	3.2	4.9	3.2			841	236.622	GST11-3M □□□080C13	224

50 Hz: P_N=0.37 kW
60 Hz: P_N=0.45 kW

n_N	950 r/min		1150 r/min				M_2 [Nm]	i		
f_N	50 Hz		60 Hz							
P_N	0.37 kW		0.45 kW							
	n_2 [r/min]	c	n_2 [r/min]	c						
	3.8	0.8	4.6	0.8			883	248.458	GST07-3M □□□080C13	224
	3.8	1.8	4.6	1.8			896	252.167	GST09-3M □□□080C13	224
	3.8	3.1	4.6	3.1			896	252.167	GST11-3M □□□080C13	224
	3.5	1.7	4.3	1.7			956	268.889	GST09-3M □□□080C13	224
	3.5	3.0	4.3	3.0			956	268.889	GST11-3M □□□080C13	224
	2.9	1.4	3.5	1.4			1160	326.333	GST09-3M □□□080C13	224
	2.9	2.5	3.5	2.5			1160	326.333	GST11-3M □□□080C13	224
	2.6	1.3	3.2	1.3			1290	363.000	GST09-3M □□□080C13	224
	2.6	2.1	3.2	2.1			1290	363.000	GST11-3M □□□080C13	224
	2.3	1.1	2.8	1.1			1466	412.500	GST09-3M □□□080C13	224
	2.3	1.9	2.8	1.9			1466	412.500	GST11-3M □□□080C13	224

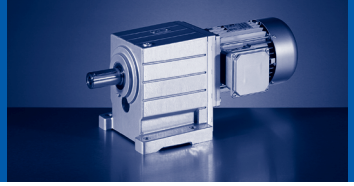

50 Hz: P_N=0.55 kW
60 Hz: P_N=0.68 kW

n_N	2630 r/min		3230 r/min				M_2 [Nm]	i		
f_N	50 Hz		60 Hz							
P_N	0.55 kW		0.68 kW							
	n_2 [r/min]	c	n_2 [r/min]	c						
	1644	4.1	2019	3.8			3.0	1.600	GST04-1M □□□071C31	212
	1284	4.7	1577	4.4			4.0	2.048	GST04-1M □□□071C31	212
	1174	4.1	1442	3.8			4.0	2.240	GST05-1M □□□071C31	212
	921	3.7	1131	3.4			6.0	2.857	GST04-1M □□□071C31	212
	890	4.1	1093	3.8			6.0	2.956	GST04-2M □□□071C31	218
	751	3.0	923	2.8			7.0	3.500	GST04-1M □□□071C31	212
	649	4.1	797	3.8			8.0	4.053	GST04-2M □□□071C31	218
	598	2.4	734	2.2			9.0	4.400	GST04-1M □□□071C31	212
	507	4.1	623	3.9			10	5.187	GST04-2M □□□071C31	218
	464	1.9	570	1.7			11	5.667	GST04-1M □□□071C31	212
	411	3.7	505	3.4			12	6.400	GST04-2M □□□071C31	218
	366	1.5	450	1.4			14	7.182	GST04-1M □□□071C31	212
	359	2.7	441	2.5			14	7.333	GST05-1M □□□071C31	212
	329	3.2	404	2.9			16	8.000	GST04-2M □□□071C31	218
	296	2.0	363	1.9			18	8.900	GST05-1M □□□071C31	212
	296	2.9	363	2.7			18	8.900	GST06-1M □□□071C31	212
	292	1.1	359	1.0			18	9.000	GST04-1M □□□071C31	212
	292	3.0	359	2.8			18	9.010	GST04-2M □□□071C31	218
	267	2.8	328	2.6			19	9.856	GST04-2M □□□071C31	218
	235	2.3	288	2.1			22	11.200	GST04-2M □□□071C31	218
	234	2.3	287	2.2			22	11.250	GST06-1M □□□071C31	212
	231	1.1	284	1.1			22	11.375	GST05-1M □□□071C31	212
	209	2.4	257	2.2			24	12.571	GST04-2M □□□071C31	218
	184	1.8	226	1.7			28	14.286	GST04-2M □□□071C31	218
	171	2.2	210	2.1			30	15.400	GST04-2M □□□071C31	218
	150	1.7	185	1.6			34	17.500	GST04-2M □□□071C31	218
	136	1.8	167	1.7			38	19.360	GST04-2M □□□071C31	218
	120	1.4	147	1.3			43	22.000	GST04-2M □□□071C31	218
	116	3.1	142	2.9			44	22.778	GST05-2M □□□071C31	218
	106	1.4	130	1.3			48	24.933	GST04-2M □□□071C31	218
	106	3.2	130	3.0			48	24.933	GST05-2M □□□071C31	218
	93	1.1	114	1.0			55	28.333	GST04-2M □□□071C31	218
	93	2.5	114	2.4			55	28.333	GST05-2M □□□071C31	218
	83	1.1	102	1.0			61	31.600	GST04-2M □□□071C31	218
	82	2.5	100	2.3			63	32.267	GST05-2M □□□071C31	218
	73	0.9	90	0.8			70	35.909	GST04-2M □□□071C31	218
	73	1.8	89	1.7			69	36.267	GST05-3M □□□071C31	224
	72	2.0	88	1.8			71	36.667	GST05-2M □□□071C31	218
	67	2.1	83	1.9			76	39.160	GST05-2M □□□071C31	218
	66	0.9	82	0.8			77	39.600	GST04-2M □□□071C31	218
	59	1.7	73	1.7			86	44.500	GST05-2M □□□071C31	218

50 Hz: P_N=0.55 kW
60 Hz: P_N=0.68 kW

n_N	2630 r/min		3230 r/min				M_2 [Nm]	i		
f_N	50 Hz		60 Hz							
P_N	0.55 kW		0.68 kW							
	n_2 [r/min]	c	n_2 [r/min]	c						
	57	1.7	70	1.6			88	46.259	GST05-3M □□□071C31	224
	53	1.4	65	1.4			97	50.050	GST05-2M □□□071C31	218
	53	2.8	65	2.8			96	49.500	GST06-2M □□□071C31	218
	47	2.8	57	2.8			109	56.250	GST06-2M □□□071C31	218
	46	1.4	57	1.3			110	56.875	GST05-2M □□□071C31	218
	46	1.4	57	1.4			108	56.667	GST05-3M □□□071C31	224
	41	1.2	51	1.2			121	63.467	GST05-3M □□□071C31	224
	39	2.8	48	2.8			129	67.760	GST06-3M □□□071C31	224
	38	2.7	46	2.6			134	70.156	GST06-3M □□□071C31	224
	37	1.2	45	1.2			136	71.238	GST05-3M □□□071C31	224
	33	1.0	40	0.9			155	80.952	GST05-3M □□□071C31	224
	33	2.2	40	2.1			155	80.952	GST06-3M □□□071C31	224
	30	2.2	37	2.2			167	87.267	GST06-3M □□□071C31	224
	29	1.0	35	1.0			175	91.746	GST05-3M □□□071C31	224
	27	1.8	33	1.7			189	99.167	GST06-3M □□□071C31	224
	24	1.8	29	1.8			209	109.707	GST06-3M □□□071C31	224
	21	1.4	26	1.4			238	124.667	GST06-3M □□□071C31	224
	21	2.9	25	2.9			243	127.176	GST07-3M □□□071C31	224
	19	1.4	23	1.4			270	141.289	GST06-3M □□□071C31	224
	19	2.7	23	2.6			266	139.211	GST07-3M □□□071C31	224
	17	2.4	20	2.3			302	158.194	GST07-3M □□□071C31	224
	16	1.1	20	1.1			306	160.556	GST06-3M □□□071C31	224
	15	1.1	18	1.1			342	179.067	GST06-3M □□□071C31	224
	15	2.1	18	2.0			344	180.156	GST07-3M □□□071C31	224
	13	0.9	16	0.9			388	203.485	GST06-3M □□□071C31	224
	13	1.8	16	1.8			391	204.722	GST07-3M □□□071C31	224
	11	0.9	14	0.8			442	231.733	GST06-3M □□□071C31	224
	11	1.5	13	1.5			474	248.458	GST07-3M □□□071C31	224
	11	1.6	14	1.5			452	236.622	GST07-3M □□□071C31	224
	9.8	1.4	12	1.4			513	268.889	GST07-3M □□□071C31	224
	9.8	3.2	12	3.1			513	268.889	GST09-3M □□□071C31	224
	8.1	1.1	9.9	1.1			623	326.333	GST07-3M □□□071C31	224
	8.1	2.6	9.9	2.5			623	326.333	GST09-3M □□□071C31	224
	7.3	2.3	8.9	2.3			693	363.000	GST09-3M □□□071C31	224
	7.2	1.0	8.8	1.0			701	367.033	GST07-3M □□□071C31	224
	6.4	2.1	7.8	2.0			787	412.500	GST09-3M □□□071C31	224
	6.3	0.9	7.7	0.9			796	417.083	GST07-3M □□□071C31	224

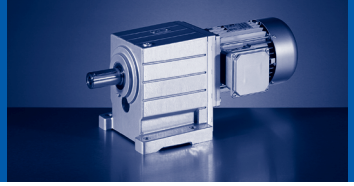

50 Hz: P_N=0.55 kW
60 Hz: P_N=0.68 kW
87 Hz: P_N=1.0 kW

n_N	1405 r/min		1705 r/min		2515 r/min		M_2 [Nm]	i		
f_N	50 Hz		60 Hz		87 Hz					
P_N	0.55 kW		0.68 kW		1.0 kW					
	n_2 [r/min]	c	n_2 [r/min]	c	n_2 [r/min]	c				
	878	3.3	1066	3.1	1572	2.7	6.0	1.600	GST04-1M □□□071C42	212
	686	3.0	833	2.9	1228	2.6	8.0	2.048	GST04-1M □□□071C42	212
	627	3.0	761	2.9	1123	2.5	8.0	2.240	GST04-1M □□□071C42	212
	541	1.9	657	1.8	968	1.6	9.0	2.597	GST03-2M □□□071C42	218
	492	2.4	597	2.3	880	2.0	11	2.857	GST04-1M □□□071C42	212
	475	3.7	577	3.5	851	3.1	11	2.956	GST04-2M □□□071C42	218
	412	1.6	500	1.5	737	1.3	12	3.413	GST03-2M □□□071C42	218
	401	1.9	487	1.9	719	1.6	13	3.500	GST04-1M □□□071C42	212
	347	3.1	421	2.9	621	2.6	15	4.053	GST04-2M □□□071C42	218
	322	1.3	390	1.3	576	1.1	16	4.368	GST03-2M □□□071C42	218
	319	1.5	388	1.5	572	1.3	16	4.400	GST04-1M □□□071C42	212
	308	3.2	374	3.1	552	2.7	17	4.556	GST05-1M □□□071C42	212
	307	2.9	373	2.8	550	2.4	17	4.571	GST04-2M □□□071C42	218
	271	2.7	329	2.6	485	2.2	19	5.187	GST04-2M □□□071C42	218
	265	1.4	321	1.3	473	1.2	19	5.312	GST03-2M □□□071C42	218
	248	1.2	301	1.2	444	1.0	21	5.667	GST04-1M □□□071C42	212
	248	2.6	301	2.5	444	2.2	21	5.667	GST05-1M □□□071C42	212
	248	3.2	301	3.0	444	2.7	21	5.667	GST06-1M □□□071C42	212
	240	2.5	291	2.4	430	2.1	21	5.850	GST04-2M □□□071C42	218
	236	1.3	286	1.3	422	1.1	22	5.965	GST03-2M □□□071C42	218
	220	2.4	266	2.3	393	2.0	23	6.400	GST04-2M □□□071C42	218
	201	1.2	244	1.1	360	1.0	25	6.982	GST03-2M □□□071C42	218
	200	2.2	242	2.1	357	1.9	26	7.040	GST04-2M □□□071C42	218
	192	1.7	233	1.7	343	1.5	27	7.333	GST05-1M □□□071C42	212
	192	2.9	233	2.8	343	2.4	27	7.333	GST06-1M □□□071C42	212
	179	1.1	218	1.1	321	0.9	28	7.840	GST03-2M □□□071C42	218
	176	2.0	213	1.9	314	1.7	29	8.000	GST04-2M □□□071C42	218
	158	1.3	192	1.2	283	1.1	33	8.900	GST05-1M □□□071C42	212
	158	2.4	192	2.3	283	2.0	33	8.900	GST06-1M □□□071C42	212
	157	1.0	191	1.0	282	0.9	32	8.935	GST03-2M □□□071C42	218
	156	1.9	189	1.8	279	1.6	33	9.010	GST04-2M □□□071C42	218
	143	1.8	173	1.7	255	1.5	36	9.856	GST04-2M □□□071C42	218
	140	1.0	170	0.9			36	10.033	GST03-2M □□□071C42	218
	125	1.4	152	1.3	224	1.2	41	11.250	GST06-1M □□□071C42	212
	125	1.5	152	1.4	225	1.2	41	11.200	GST04-2M □□□071C42	218
	125	3.1	152	3.0	225	2.6	41	11.200	GST05-2M □□□071C42	218
	123	0.9	149	0.8			41	11.429	GST03-2M □□□071C42	218
	112	1.5	136	1.5	200	1.3	46	12.571	GST04-2M □□□071C42	218
	110	0.8					47	12.833	GST03-2M □□□071C42	218
	108	2.9	131	2.8	193	2.5	47	13.016	GST05-2M □□□071C42	218
	98	1.2	119	1.1	176	1.0	52	14.286	GST04-2M □□□071C42	218

50 Hz: P_N=0.55 kW
60 Hz: P_N=0.68 kW
87 Hz: P_N=1.0 kW

n_N	1405 r/min		1705 r/min		2515 r/min		M_2 [Nm]	i		
f_N	50 Hz		60 Hz		87 Hz					
P_N	0.55 kW		0.68 kW		1.0 kW					
	n_2 [r/min]	c	n_2 [r/min]	c	n_2 [r/min]	c				
	98	2.7	119	2.6	175	2.3	52	14.356	GST05-2M □□□071C42	218
	91	1.3	111	1.3	163	1.2	56	15.400	GST04-2M □□□071C42	218
	87	2.5	105	2.5	155	2.4	59	16.190	GST05-2M □□□071C42	218
	80	1.0	97	1.0	144	0.9	64	17.500	GST04-2M □□□071C42	218
	80	2.2	97	2.2	144	2.1	64	17.500	GST05-2M □□□071C42	218
	73	1.0	88	1.0	130	1.0	70	19.360	GST04-2M □□□071C42	218
	70	2.2	85	2.2	126	2.1	73	20.044	GST05-2M □□□071C42	218
	62	1.7	75	1.7	110	1.7	83	22.778	GST05-2M □□□071C42	218
	56	1.8	68	1.8	101	1.7	90	24.933	GST05-2M □□□071C42	218
	56	3.2	68	3.2	101	3.0	90	24.933	GST06-2M □□□071C42	218
	50	1.4	60	1.4	89	1.4	103	28.333	GST05-2M □□□071C42	218
	50	3.1	60	3.1	89	3.0	103	28.333	GST06-2M □□□071C42	218
	44	1.4	53	1.4	78	1.3	117	32.267	GST05-2M □□□071C42	218
	44	2.9	53	2.9	78	2.8	117	32.267	GST06-2M □□□071C42	218
	39	1.0	47	1.0	69	1.0	130	36.267	GST05-3M □□□071C42	224
	38	1.1	47	1.1	69	1.1	133	36.667	GST05-2M □□□071C42	218
	38	2.4	47	2.4	69	2.3	133	36.667	GST06-2M □□□071C42	218
	36	1.2	44	1.2	64	1.1	142	39.160	GST05-2M □□□071C42	218
	36	2.3	44	2.3	64	2.2	140	39.200	GST06-3M □□□071C42	224
	36	2.4	44	2.4	64	2.3	142	39.160	GST06-2M □□□071C42	218
	32	0.9	38	0.9	57	0.9	161	44.500	GST05-2M □□□071C42	218
	32	2.0	38	2.0	57	2.0	161	44.500	GST06-2M □□□071C42	218
	32	2.1	39	2.1	57	2.1	157	44.000	GST06-3M □□□071C42	224
	30	0.9	37	0.9	54	0.9	165	46.259	GST05-3M □□□071C42	224
	28	1.4	34	1.4	51	1.4	180	49.500	GST06-2M □□□071C42	218
	28	1.8	33	1.8	49	1.8	182	51.022	GST06-3M □□□071C42	224
	26	1.8	32	1.8	47	1.8	193	53.900	GST06-3M □□□071C42	224
	25	1.4	30	1.4	45	1.4	204	56.250	GST06-2M □□□071C42	218
	22	3.0	26	3.0	39	3.0	233	65.079	GST07-3M □□□071C42	224
	21	1.5	25	1.5	37	1.5	242	67.760	GST06-3M □□□071C42	224
	20	1.4	24	1.4	36	1.4	251	70.156	GST06-3M □□□071C42	224
	20	2.8	24	2.8	36	2.8	251	70.156	GST07-3M □□□071C42	224
	18	2.5	21	2.5	32	2.5	285	79.762	GST07-3M □□□071C42	224
	17	1.2	21	1.2	31	1.2	289	80.952	GST06-3M □□□071C42	224
	16	1.2	20	1.2	29	1.2	312	87.267	GST06-3M □□□071C42	224
	16	2.3	20	2.3	29	2.3	307	85.983	GST07-3M □□□071C42	224
	14	1.0	17	1.0	25	1.0	354	99.167	GST06-3M □□□071C42	224
	14	2.0	17	2.0	26	2.0	349	97.708	GST07-3M □□□071C42	224
	13	1.0	16	1.0	23	1.0	392	109.707	GST06-3M □□□071C42	224
	13	1.8	15	1.8	23	1.8	400	111.915	GST07-3M □□□071C42	224
	11	1.6	13	1.6	20	1.6	454	127.176	GST07-3M □□□071C42	224

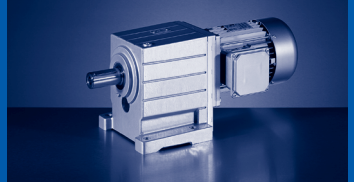

50 Hz: P_N=0.55 kW
60 Hz: P_N=0.68 kW
87 Hz: P_N=1.0 kW

n_N	1405 r/min		1705 r/min		2515 r/min		M_2 [Nm]	i		
f_N	50 Hz		60 Hz		87 Hz					
P_N	0.55 kW		0.68 kW		1.0 kW					
	n_2 [r/min]	c	n_2 [r/min]	c	n_2 [r/min]	c				
	10	1.4	12	1.4	18	1.4	497	139.211	GST07-3M □□□071C42	224
	9.9	3.2	12	3.2	18	3.2	505	141.289	GST09-3M □□□071C42	224
	8.9	1.3	11	1.3	16	1.3	565	158.194	GST07-3M □□□071C42	224
	8.8	2.8	11	2.8	16	2.8	574	160.556	GST09-3M □□□071C42	224
	7.8	1.1	9.5	1.1	14	1.1	644	180.156	GST07-3M □□□071C42	224
	7.7	2.5	9.3	2.5	14	2.5	653	182.844	GST09-3M □□□071C42	224
	6.9	1.0	8.3	1.0	12	1.0	731	204.722	GST07-3M □□□071C42	224
	6.8	2.2	8.2	2.2	12	2.2	742	207.778	GST09-3M □□□071C42	224
	5.9	0.8	7.2	0.8	11	0.8	845	236.622	GST07-3M □□□071C42	224
	5.9	1.9	7.2	1.9	11	1.9	845	236.622	GST09-3M □□□071C42	224
	5.6	1.8	6.8	1.8	10	1.8	901	252.167	GST09-3M □□□071C42	224
	5.2	1.7	6.3	1.7	9.4	1.7	961	268.889	GST09-3M □□□071C42	224
	4.3	1.4	5.2	1.4	7.7	1.4	1166	326.333	GST09-3M □□□071C42	224
	3.9	1.2	4.7	1.2	6.9	1.2	1297	363.000	GST09-3M □□□071C42	224
	3.4	1.1	4.1	1.1	6.1	1.1	1474	412.500	GST09-3M □□□071C42	224

50 Hz: P_N=0.55 kW
60 Hz: P_N=0.66 kW

n_N	930 r/min		1130 r/min				M_2 [Nm]	i		
f_N	50 Hz		60 Hz							
P_N	0.55 kW		0.66 kW							
	n_2 [r/min]	c	n_2 [r/min]	c						
	581	2.2	706	2.2			9.0	1.600	GST04-1M □□□080C33	212
	454	2.0	552	2.0			11	2.048	GST04-1M □□□080C33	212
	415	2.0	505	2.0			13	2.240	GST04-1M □□□080C33	212
	326	1.6	396	1.6			16	2.857	GST04-1M □□□080C33	212
	315	2.4	382	2.4			16	2.956	GST04-2M □□□080C33	218
	279	2.3	339	2.3			18	3.333	GST04-2M □□□080C33	218
	266	1.3	323	1.3			20	3.500	GST04-1M □□□080C33	212
	266	2.8	323	2.8			20	3.500	GST05-1M □□□080C33	212
	229	2.0	279	2.0			22	4.053	GST04-2M □□□080C33	218
	211	1.0	257	1.0			25	4.400	GST04-1M □□□080C33	212
	204	2.1	248	2.1			25	4.556	GST05-1M □□□080C33	212
	204	3.1	248	3.1			25	4.556	GST06-1M □□□080C33	212
	203	1.9	247	1.9			25	4.571	GST04-2M □□□080C33	218
	179	1.8	218	1.8			28	5.187	GST04-2M □□□080C33	218
	179	3.2	218	3.2			28	5.187	GST05-2M □□□080C33	218
	164	1.7	199	1.7			32	5.667	GST05-1M □□□080C33	212
	164	2.6	199	2.6			32	5.667	GST06-1M □□□080C33	212
	159	1.7	193	1.7			32	5.850	GST04-2M □□□080C33	218
	159	3.2	193	3.2			32	5.850	GST05-2M □□□080C33	218
	145	1.6	177	1.6			35	6.400	GST04-2M □□□080C33	218
	145	3.0	177	3.0			35	6.400	GST05-2M □□□080C33	218
	132	1.5	161	1.5			39	7.040	GST04-2M □□□080C33	218
	129	2.7	156	2.7			40	7.238	GST05-2M □□□080C33	218
	127	1.1	154	1.1			41	7.333	GST05-1M □□□080C33	212
	127	2.4	154	2.4			41	7.333	GST06-1M □□□080C33	212
	127	2.6	154	2.6			41	7.333	GST07-1M □□□080C33	212
	116	1.3	141	1.3			44	8.000	GST04-2M □□□080C33	218
	114	2.6	138	2.6			45	8.163	GST05-2M □□□080C33	218
	105	0.9	127	0.9			50	8.900	GST05-1M □□□080C33	212
	105	1.7	127	1.7			50	8.900	GST06-1M □□□080C33	212
	105	2.3	127	2.3			50	8.900	GST07-1M □□□080C33	212
	103	1.3	125	1.3			49	9.010	GST04-2M □□□080C33	218
	103	2.4	125	2.4			49	9.010	GST05-2M □□□080C33	218
	94	1.2	115	1.2			54	9.856	GST04-2M □□□080C33	218
	93	2.3	113	2.3			55	10.000	GST05-2M □□□080C33	218
	83	1.0	101	1.0			61	11.200	GST04-2M □□□080C33	218
	83	1.0	100	1.0			63	11.250	GST06-1M □□□080C33	212
	83	1.8	100	1.8			63	11.250	GST07-1M □□□080C33	212
	83	2.1	101	2.1			61	11.200	GST05-2M □□□080C33	218
	74	1.0	90	1.0			69	12.571	GST04-2M □□□080C33	218
	72	1.9	87	1.9			71	13.016	GST05-2M □□□080C33	218

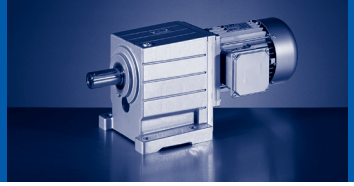

50 Hz: P_N=0.55 kW
60 Hz: P_N=0.66 kW

n_N	930 r/min		1130 r/min				M_2 [Nm]	i		
f_N	50 Hz		60 Hz							
P_N	0.55 kW		0.66 kW							
	n_2 [r/min]	c	n_2 [r/min]	c						
	65	1.8	79	1.8			79	14.356	GST05-2M □□□080C33	218
	60	0.8	73	0.8			84	15.400	GST04-2M □□□080C33	218
	57	1.7	70	1.7			89	16.190	GST05-2M □□□080C33	218
	53	1.5	65	1.5			96	17.500	GST05-2M □□□080C33	218
	46	1.5	56	1.5			110	20.044	GST05-2M □□□080C33	218
	46	3.1	56	3.1			110	20.044	GST06-2M □□□080C33	218
	41	1.2	50	1.2			125	22.778	GST05-2M □□□080C33	218
	41	2.5	50	2.5			125	22.778	GST06-2M □□□080C33	218
	37	1.2	45	1.2			137	24.933	GST05-2M □□□080C33	218
	37	2.6	45	2.6			137	24.933	GST06-2M □□□080C33	218
	33	1.0	40	1.0			155	28.333	GST05-2M □□□080C33	218
	33	2.0	40	2.0			155	28.333	GST06-2M □□□080C33	218
	29	0.9	35	0.9			177	32.267	GST05-2M □□□080C33	218
	29	2.1	35	2.1			177	32.267	GST06-2M □□□080C33	218
	29	2.6	35	2.6			177	32.267	GST07-2M □□□080C33	218
	25	1.6	31	1.6			201	36.667	GST06-2M □□□080C33	218
	25	2.6	31	2.6			201	36.667	GST07-2M □□□080C33	218
	24	1.5	29	1.5			212	39.200	GST06-3M □□□080C33	224
	24	1.7	29	1.7			215	39.160	GST06-2M □□□080C33	218
	24	2.3	29	2.3			215	39.160	GST07-2M □□□080C33	218
	21	1.3	25	1.3			244	44.500	GST06-2M □□□080C33	218
	21	1.4	26	1.4			238	44.000	GST06-3M □□□080C33	224
	21	2.3	25	2.3			244	44.500	GST07-2M □□□080C33	218
	21	3.0	26	3.0			238	44.000	GST07-3M □□□080C33	224
	19	1.0	23	1.0			271	49.500	GST06-2M □□□080C33	218
	19	1.8	23	1.8			271	49.500	GST07-2M □□□080C33	218
	18	1.2	22	1.2			275	51.022	GST06-3M □□□080C33	224
	18	2.5	22	2.5			275	51.022	GST07-3M □□□080C33	224
	17	1.0	20	1.0			308	56.250	GST06-2M □□□080C33	218
	17	1.2	21	1.2			291	53.900	GST06-3M □□□080C33	224
	17	1.8	20	1.8			308	56.250	GST07-2M □□□080C33	218
	17	2.4	21	2.4			291	53.900	GST07-3M □□□080C33	224
	14	1.0	17	1.0			366	67.760	GST06-3M □□□080C33	224
	14	2.0	17	2.0			351	65.079	GST07-3M □□□080C33	224
	13	1.0	16	1.0			379	70.156	GST06-3M □□□080C33	224
	13	1.9	16	1.9			379	70.156	GST07-3M □□□080C33	224
	12	1.7	14	1.7			431	79.762	GST07-3M □□□080C33	224
	11	1.5	13	1.5			464	85.983	GST07-3M □□□080C33	224
	9.9	3.1	12	3.1			505	93.541	GST09-3M □□□080C33	224
	9.5	1.4	12	1.4			527	97.708	GST07-3M □□□080C33	224
	8.3	1.2	10	1.2			604	111.915	GST07-3M □□□080C33	224

50 Hz: P_N=0.55 kW
60 Hz: P_N=0.66 kW

n_N	930 r/min		1130 r/min				M_2 [Nm]	i		
f_N	50 Hz		60 Hz							
P_N	0.55 kW		0.66 kW							
	n_2 [r/min]	c	n_2 [r/min]	c						
	8.2	2.6	10	2.6			613	113.585	GST09-3M □□□080C33	224
	7.3	1.0	8.9	1.0			686	127.176	GST07-3M □□□080C33	224
	7.2	2.3	8.8	2.3			697	129.074	GST09-3M □□□080C33	224
	6.7	0.9	8.1	0.9			751	139.211	GST07-3M □□□080C33	224
	6.6	2.1	8	2.1			763	141.289	GST09-3M □□□080C33	224
	5.9	0.8	7.1	0.8			854	158.194	GST07-3M □□□080C33	224
	5.8	1.9	7	1.9			867	160.556	GST09-3M □□□080C33	224
	5.1	1.6	6.2	1.6			987	182.844	GST09-3M □□□080C33	224
	4.5	1.5	5.4	1.5			1121	207.778	GST09-3M □□□080C33	224
	4.5	2.5	5.4	2.5			1121	207.778	GST11-3M □□□080C33	224
	3.9	1.3	4.8	1.3			1277	236.622	GST09-3M □□□080C33	224
	3.9	2.1	4.8	2.1			1277	236.622	GST11-3M □□□080C33	224
	3.7	1.2	4.5	1.2			1361	252.167	GST09-3M □□□080C33	224
	3.7	2.1	4.5	2.1			1361	252.167	GST11-3M □□□080C33	224
	3.5	1.1	4.2	1.1			1451	268.889	GST09-3M □□□080C33	224
	3.5	2.0	4.2	2.0			1451	268.889	GST11-3M □□□080C33	224
	2.9	0.9	3.5	0.9			1761	326.333	GST09-3M □□□080C33	224
	2.9	1.6	3.5	1.6			1761	326.333	GST11-3M □□□080C33	224
	2.6	0.8	3.1	0.8			1959	363.000	GST09-3M □□□080C33	224
	2.6	1.4	3.1	1.4			1959	363.000	GST11-3M □□□080C33	224
	2.3	1.3	2.7	1.3			2226	412.500	GST11-3M □□□080C33	224

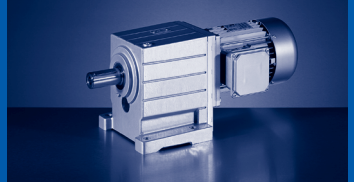

50 Hz: P_N=0.75 kW
60 Hz: P_N=0.92 kW

n_N	2720 r/min		3320 r/min				M_2 [Nm]	i		
f_N	50 Hz		60 Hz							
P_N	0.75 kW		0.92 kW							
	n_2 [r/min]	c	n_2 [r/min]	c						
	1700	3.8	2075	3.6			4.0	1.600	GST04-1M □□□080C11	212
	1328	3.5	1621	3.3			5.0	2.048	GST04-1M □□□080C11	212
	1214	3.5	1482	3.3			6.0	2.240	GST04-1M □□□080C11	212
	952	2.8	1162	2.6			7.0	2.857	GST04-1M □□□080C11	212
	920	4.3	1123	4.0			8.0	2.956	GST04-2M □□□080C11	218
	777	2.3	949	2.1			9.0	3.500	GST04-1M □□□080C11	212
	671	3.6	819	3.3			10	4.053	GST04-2M □□□080C11	218
	618	1.8	755	1.7			11	4.400	GST04-1M □□□080C11	212
	524	3.1	640	2.9			13	5.187	GST04-2M □□□080C11	218
	480	1.4	586	1.3			15	5.667	GST04-1M □□□080C11	212
	480	3.0	586	2.8			15	5.667	GST05-1M □□□080C11	212
	465	2.9	568	2.7			15	5.850	GST04-2M □□□080C11	218
	425	2.8	519	2.6			16	6.400	GST04-2M □□□080C11	218
	386	2.6	472	2.4			18	7.040	GST04-2M □□□080C11	218
	371	2.0	453	1.9			19	7.333	GST05-1M □□□080C11	212
	340	2.4	415	2.2			20	8.000	GST04-2M □□□080C11	218
	306	1.5	373	1.4			23	8.900	GST05-1M □□□080C11	212
	306	3.0	373	2.8			23	8.900	GST06-1M □□□080C11	212
	302	2.2	369	2.1			23	9.010	GST04-2M □□□080C11	218
	276	2.1	337	2.0			25	9.856	GST04-2M □□□080C11	218
	243	1.7	296	1.6			29	11.200	GST04-2M □□□080C11	218
	242	1.8	295	1.7			29	11.250	GST06-1M □□□080C11	212
	242	3.2	295	3.0			29	11.250	GST07-1M □□□080C11	212
	216	1.8	264	1.7			32	12.571	GST04-2M □□□080C11	218
	190	1.4	232	1.3			37	14.286	GST04-2M □□□080C11	218
	190	3.1	231	2.9			37	14.356	GST05-2M □□□080C11	218
	177	1.7	216	1.5			39	15.400	GST04-2M □□□080C11	218
	155	1.3	190	1.2			45	17.500	GST04-2M □□□080C11	218
	155	3.0	190	2.8			45	17.500	GST05-2M □□□080C11	218
	141	1.3	172	1.2			50	19.360	GST04-2M □□□080C11	218
	136	2.9	166	2.7			51	20.044	GST05-2M □□□080C11	218
	124	1.0	151	1.0			56	22.000	GST04-2M □□□080C11	218
	119	2.3	146	2.2			58	22.778	GST05-2M □□□080C11	218
	109	1.0	133	1.0			64	24.933	GST04-2M □□□080C11	218
	109	2.4	133	2.2			64	24.933	GST05-2M □□□080C11	218
	96	0.8					72	28.333	GST04-2M □□□080C11	218
	96	1.9	117	1.8			72	28.333	GST05-2M □□□080C11	218
	84	1.9	103	1.7			82	32.267	GST05-2M □□□080C11	218
	75	1.4	92	1.3			91	36.267	GST05-3M □□□080C11	224
	74	1.5	91	1.4			94	36.667	GST05-2M □□□080C11	218
	74	3.2	91	3.0			94	36.667	GST06-2M □□□080C11	218

50 Hz: P_N=0.75 kW
60 Hz: P_N=0.92 kW

n_N	2720 r/min		3320 r/min				M_2 [Nm]	i		
f_N	50 Hz		60 Hz							
P_N	0.75 kW		0.92 kW							
	n_2 [r/min]	c	n_2 [r/min]	c						
	70	1.5	85	1.4			100	39.160	GST05-2M □□□080C11	218
	69	3.0	85	2.8			99	39.200	GST06-3M □□□080C11	224
	62	3.0	76	2.9			111	44.000	GST06-3M □□□080C11	224
	61	1.3	75	1.3			114	44.500	GST05-2M □□□080C11	218
	61	2.9	75	2.8			114	44.500	GST06-2M □□□080C11	218
	59	1.3	72	1.2			116	46.259	GST05-3M □□□080C11	224
	55	2.2	67	2.1			127	49.500	GST06-2M □□□080C11	218
	53	2.5	65	2.5			128	51.022	GST06-3M □□□080C11	224
	51	2.6	62	2.5			136	53.900	GST06-3M □□□080C11	224
	48	1.1	59	1.1			143	56.667	GST05-3M □□□080C11	224
	48	2.2	59	2.1			144	56.250	GST06-2M □□□080C11	218
	43	0.9	52	0.9			160	63.467	GST05-3M □□□080C11	224
	40	2.1	49	2.1			171	67.760	GST06-3M □□□080C11	224
	39	2.0	47	2.0			177	70.156	GST06-3M □□□080C11	224
	38	0.9	47	0.9			179	71.238	GST05-3M □□□080C11	224
	34	1.6	41	1.6			204	80.952	GST06-3M □□□080C11	224
	31	1.7	38	1.6			220	87.267	GST06-3M □□□080C11	224
	28	2.9	34	2.8			246	97.708	GST07-3M □□□080C11	224
	27	1.3	34	1.3			250	99.167	GST06-3M □□□080C11	224
	25	1.4	30	1.3			276	109.707	GST06-3M □□□080C11	224
	24	2.5	30	2.4			282	111.915	GST07-3M □□□080C11	224
	22	1.1	27	1.1			314	124.667	GST06-3M □□□080C11	224
	21	2.2	26	2.1			320	127.176	GST07-3M □□□080C11	224
	20	2.0	24	2.0			350	139.211	GST07-3M □□□080C11	224
	19	1.1	24	1.0			356	141.289	GST06-3M □□□080C11	224
	17	0.9	21	0.8			404	160.556	GST06-3M □□□080C11	224
	17	1.8	21	1.7			398	158.194	GST07-3M □□□080C11	224
	15	1.6	18	1.5			453	180.156	GST07-3M □□□080C11	224
	13	1.4	16	1.3			515	204.722	GST07-3M □□□080C11	224
	13	3.1	16	3.0			523	207.778	GST09-3M □□□080C11	224
	12	1.2	14	1.2			595	236.622	GST07-3M □□□080C11	224
	12	2.7	14	2.6			595	236.622	GST09-3M □□□080C11	224
	11	1.1	13	1.1			625	248.458	GST07-3M □□□080C11	224
	11	2.6	13	2.5			635	252.167	GST09-3M □□□080C11	224
	10	1.1	12	1.0			677	268.889	GST07-3M □□□080C11	224
	10	2.4	12	2.3			677	268.889	GST09-3M □□□080C11	224
	8.3	0.9	10	0.8			821	326.333	GST07-3M □□□080C11	224
	8.3	2.0	10	1.9			821	326.333	GST09-3M □□□080C11	224
	7.5	1.8	9.2	1.7			913	363.000	GST09-3M □□□080C11	224
	7.5	3.0	9.2	2.9			913	363.000	GST11-3M □□□080C11	224
	6.6	1.6	8.1	1.5			1038	412.500	GST09-3M □□□080C11	224

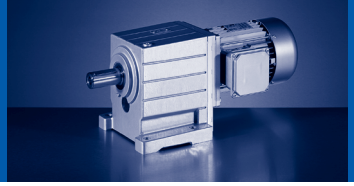

50 Hz: P_N=0.75 kW
60 Hz: P_N=0.92 kW

n_N	2720 r/min		3320 r/min				M_2 [Nm]	i		
f_N	50 Hz		60 Hz							
P_N	0.75 kW		0.92 kW							
	n_2 [r/min]	c	n_2 [r/min]	c						
	6.6	2.7	8.1	2.7			1038	412.500	GST11-3M □□□080C11	224

50 Hz: P_N=0.75 kW
60 Hz: P_N=0.92 kW
87 Hz: P_N=1.35 kW

n_N	1410 r/min		1710 r/min		2520 r/min		M_2 [Nm]	i		
f_N	50 Hz		60 Hz		87 Hz					
P_N	0.75 kW		0.92 kW		1.35 kW					
	n_2 [r/min]	c	n_2 [r/min]	c	n_2 [r/min]	c				
	881	2.4	1069	2.3	1575	2.0	8.0	1.600	GST04-1M □□□080C32	212
	689	2.2	835	2.1	1231	1.9	10	2.048	GST04-1M □□□080C32	212
	630	2.2	763	2.1	1125	1.9	11	2.240	GST04-1M □□□080C32	212
	494	1.8	599	1.7	882	1.5	14	2.857	GST04-1M □□□080C32	212
	477	2.7	579	2.6	853	2.3	15	2.956	GST04-2M □□□080C32	218
	423	2.5	513	2.4	756	2.1	16	3.333	GST04-2M □□□080C32	218
	403	1.4	489	1.4	720	1.2	18	3.500	GST04-1M □□□080C32	212
	403	3.1	489	3.0	720	2.6	18	3.500	GST05-1M □□□080C32	212
	348	2.3	422	2.2	622	1.9	20	4.053	GST04-2M □□□080C32	218
	321	1.1	389	1.1	573	1.0	22	4.400	GST04-1M □□□080C32	212
	310	2.4	375	2.3	553	2.0	23	4.556	GST05-1M □□□080C32	212
	308	2.1	374	2.0	551	1.8	23	4.571	GST04-2M □□□080C32	218
	272	2.0	330	1.9	486	1.7	26	5.187	GST04-2M □□□080C32	218
	249	0.9	302	0.8			28	5.667	GST04-1M □□□080C32	212
	249	1.9	302	1.8	445	1.6	28	5.667	GST05-1M □□□080C32	212
	249	2.9	302	2.8	445	2.4	28	5.667	GST06-1M □□□080C32	212
	241	1.9	292	1.8	431	1.6	29	5.850	GST04-2M □□□080C32	218
	220	1.8	267	1.7	394	1.5	32	6.400	GST04-2M □□□080C32	218
	200	1.6	243	1.6	358	1.4	35	7.040	GST04-2M □□□080C32	218
	195	3.0	236	2.9	348	2.6	36	7.238	GST05-2M □□□080C32	218
	192	1.3	233	1.2	344	1.1	37	7.333	GST05-1M □□□080C32	212
	192	2.6	233	2.5	344	2.2	37	7.333	GST06-1M □□□080C32	212
	192	2.9	233	2.8	344	2.4	37	7.333	GST07-1M □□□080C32	212
	176	1.5	214	1.4	315	1.3	39	8.000	GST04-2M □□□080C32	218
	173	2.9	210	2.7	309	2.4	40	8.163	GST05-2M □□□080C32	218
	158	1.0	192	0.9			45	8.900	GST05-1M □□□080C32	212
	158	1.9	192	1.8	283	1.6	45	8.900	GST06-1M □□□080C32	212
	158	2.5	192	2.4	283	2.1	45	8.900	GST07-1M □□□080C32	212
	157	1.4	190	1.4	280	1.2	44	9.010	GST04-2M □□□080C32	218
	157	2.7	190	2.6	280	2.3	44	9.010	GST05-2M □□□080C32	218
	143	1.3	174	1.3	256	1.1	49	9.856	GST04-2M □□□080C32	218
	141	2.5	171	2.4	252	2.1	49	10.000	GST05-2M □□□080C32	218
	126	1.1	153	1.0	225	0.9	55	11.200	GST04-2M □□□080C32	218
	126	2.3	153	2.2	225	1.9	55	11.200	GST05-2M □□□080C32	218
	125	1.1	152	1.1	224	0.9	56	11.250	GST06-1M □□□080C32	212
	125	2.0	152	1.9	224	1.7	56	11.250	GST07-1M □□□080C32	212
	112	1.1	136	1.1	201	0.9	62	12.571	GST04-2M □□□080C32	218
	108	2.1	131	2.1	194	1.8	64	13.016	GST05-2M □□□080C32	218
	99	0.9	120	0.8			70	14.286	GST04-2M □□□080C32	218
	98	2.0	119	1.9	176	1.7	71	14.356	GST05-2M □□□080C32	218
	92	0.9	111	0.9	164	0.9	76	15.400	GST04-2M □□□080C32	218

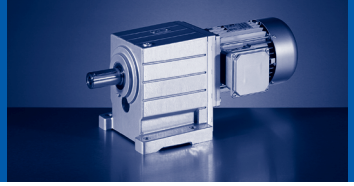

50 Hz: P_N=0.75 kW
60 Hz: P_N=0.92 kW
87 Hz: P_N=1.35 kW

n_N	1410 r/min		1710 r/min		2520 r/min		M_2 [Nm]	i		
f_N	50 Hz		60 Hz		87 Hz					
P_N	0.75 kW		0.92 kW		1.35 kW					
	n_2 [r/min]	c	n_2 [r/min]	c	n_2 [r/min]	c				
	87	1.9	106	1.9	156	1.8	80	16.190	GST05-2M □□□080C32	218
	81	1.7	98	1.7	144	1.6	86	17.500	GST05-2M □□□080C32	218
	70	1.6	85	1.6	126	1.5	99	20.044	GST05-2M □□□080C32	218
	62	1.3	75	1.3	111	1.2	112	22.778	GST05-2M □□□080C32	218
	62	2.8	75	2.8	111	2.7	112	22.778	GST06-2M □□□080C32	218
	57	1.3	69	1.3	101	1.3	123	24.933	GST05-2M □□□080C32	218
	57	2.9	69	2.9	101	2.8	123	24.933	GST06-2M □□□080C32	218
	50	1.1	60	1.1	89	1.0	140	28.333	GST05-2M □□□080C32	218
	50	2.3	60	2.3	89	2.2	140	28.333	GST06-2M □□□080C32	218
	44	1.0	53	1.0	78	1.0	159	32.267	GST05-2M □□□080C32	218
	44	2.3	53	2.3	78	2.2	159	32.267	GST06-2M □□□080C32	218
	44	2.9	53	2.9	78	2.8	159	32.267	GST07-2M □□□080C32	218
	39	0.8	47	0.8			181	36.667	GST05-2M □□□080C32	218
	39	1.8	47	1.8	69	1.7	181	36.667	GST06-2M □□□080C32	218
	39	2.9	47	2.9	69	2.8	181	36.667	GST07-2M □□□080C32	218
	36	0.9	44	0.9	64	0.8	193	39.160	GST05-2M □□□080C32	218
	36	1.7	44	1.7	64	1.6	190	39.200	GST06-3M □□□080C32	224
	36	1.9	44	1.9	64	1.8	193	39.160	GST06-2M □□□080C32	218
	36	2.5	44	2.5	64	2.4	193	39.160	GST07-2M □□□080C32	218
	32	1.5	38	1.5	57	1.5	219	44.500	GST06-2M □□□080C32	218
	32	1.6	39	1.6	57	1.6	214	44.000	GST06-3M □□□080C32	224
	32	2.5	38	2.5	57	2.5	219	44.500	GST07-2M □□□080C32	218
	29	1.1	35	1.1	51	1.1	244	49.500	GST06-2M □□□080C32	218
	29	2.0	35	2.0	51	2.0	244	49.500	GST07-2M □□□080C32	218
	28	1.3	34	1.3	49	1.3	248	51.022	GST06-3M □□□080C32	224
	28	2.8	34	2.8	49	2.8	248	51.022	GST07-3M □□□080C32	224
	26	1.3	32	1.3	47	1.3	262	53.900	GST06-3M □□□080C32	224
	26	2.7	32	2.7	47	2.7	262	53.900	GST07-3M □□□080C32	224
	25	1.1	30	1.1	45	1.1	277	56.250	GST06-2M □□□080C32	218
	25	2.0	30	2.0	45	2.0	277	56.250	GST07-2M □□□080C32	218
	22	2.2	26	2.2	39	2.2	316	65.079	GST07-3M □□□080C32	224
	21	1.1	25	1.1	37	1.1	329	67.760	GST06-3M □□□080C32	224
	20	1.1	24	1.1	36	1.1	341	70.156	GST06-3M □□□080C32	224
	20	2.1	24	2.1	36	2.1	341	70.156	GST07-3M □□□080C32	224
	18	1.8	21	1.8	32	1.8	387	79.762	GST07-3M □□□080C32	224
	17	0.9	21	0.9	31	0.9	393	80.952	GST06-3M □□□080C32	224
	16	0.9	20	0.9	29	0.9	424	87.267	GST06-3M □□□080C32	224
	16	1.7	20	1.7	29	1.7	417	85.983	GST07-3M □□□080C32	224
	14	1.5	18	1.5	26	1.5	474	97.708	GST07-3M □□□080C32	224
	13	1.3	15	1.3	23	1.3	543	111.915	GST07-3M □□□080C32	224
	12	2.9	15	2.9	22	2.9	551	113.585	GST09-3M □□□080C32	224

50 Hz: P_N=0.75 kW
60 Hz: P_N=0.92 kW
87 Hz: P_N=1.35 kW

n_N	1410 r/min		1710 r/min		2520 r/min		M_2 [Nm]	i		
f_N	50 Hz		60 Hz		87 Hz					
P_N	0.75 kW		0.92 kW		1.35 kW					
	n_2 [r/min]	c	n_2 [r/min]	c	n_2 [r/min]	c				
	11	1.2	13	1.2	20	1.2	617	127.176	GST07-3M □□□080C32	224
	11	2.6	13	2.6	20	2.6	627	129.074	GST09-3M □□□080C32	224
	10	1.0	12	1.0	18	1.0	676	139.211	GST07-3M □□□080C32	224
	10	2.4	12	2.4	18	2.4	686	141.289	GST09-3M □□□080C32	224
	8.9	0.9	11	0.9	16	0.9	768	158.194	GST07-3M □□□080C32	224
	8.8	2.1	11	2.1	16	2.1	779	160.556	GST09-3M □□□080C32	224
	7.8	0.8	9.5	0.8	14	0.8	875	180.156	GST07-3M □□□080C32	224
	7.7	1.8	9.4	1.8	14	1.8	888	182.844	GST09-3M □□□080C32	224
	6.8	1.6	8.2	1.6	12	1.6	1009	207.778	GST09-3M □□□080C32	224
	6.8	2.8	8.2	2.8	12	2.8	1009	207.778	GST11-3M □□□080C32	224
	6	1.4	7.2	1.4	11	1.4	1149	236.622	GST09-3M □□□080C32	224
	6	2.4	7.2	2.4	11	2.4	1149	236.622	GST11-3M □□□080C32	224
	5.6	1.3	6.8	1.3	10	1.3	1224	252.167	GST09-3M □□□080C32	224
	5.6	2.3	6.8	2.3	10	2.3	1224	252.167	GST11-3M □□□080C32	224
	5.2	1.2	6.4	1.2	9.4	1.2	1305	268.889	GST09-3M □□□080C32	224
	5.2	2.2	6.4	2.2	9.4	2.2	1305	268.889	GST11-3M □□□080C32	224
	4.3	1.0	5.2	1.0	7.7	1.0	1584	326.333	GST09-3M □□□080C32	224
	4.3	1.8	5.2	1.8	7.7	1.8	1584	326.333	GST11-3M □□□080C32	224
	3.9	0.9	4.7	0.9	6.9	0.9	1762	363.000	GST09-3M □□□080C32	224
	3.9	1.5	4.7	1.5	6.9	1.5	1762	363.000	GST11-3M □□□080C32	224
	3.4	0.8	4.2	0.8	6.1	0.8	2002	412.500	GST09-3M □□□080C32	224
	3.4	1.4	4.2	1.4	6.1	1.4	2002	412.500	GST11-3M □□□080C32	224

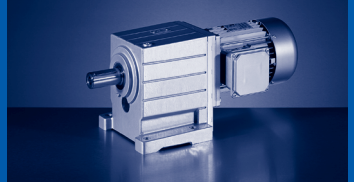

50 Hz: P_N=1.1 kW
60 Hz: P_N=1.3 kW

n_N	2720 r/min		3320 r/min				M_2 [Nm]	i		
f_N	50 Hz		60 Hz							
P_N	1.1 kW		1.3 kW							
	n_2 [r/min]	c	n_2 [r/min]	c						
	1700	2.6	2075	2.4			6.0	1.600	GST04-1M □□□080C31	212
	1328	2.4	1621	2.3			8.0	2.048	GST04-1M □□□080C31	212
	1214	2.4	1482	2.2			9.0	2.240	GST04-1M □□□080C31	212
	952	1.9	1162	1.8			11	2.857	GST04-1M □□□080C31	212
	920	2.9	1123	2.7			11	2.956	GST04-2M □□□080C31	218
	816	2.7	996	2.6			13	3.333	GST04-2M □□□080C31	218
	777	1.5	949	1.4			13	3.500	GST04-1M □□□080C31	212
	671	2.4	819	2.3			15	4.053	GST04-2M □□□080C31	218
	618	1.2	755	1.2			17	4.400	GST04-1M □□□080C31	212
	597	2.6	729	2.4			17	4.556	GST05-1M □□□080C31	212
	595	2.3	726	2.2			17	4.571	GST04-2M □□□080C31	218
	524	2.1	640	2.0			19	5.187	GST04-2M □□□080C31	218
	480	1.0	586	0.9			22	5.667	GST04-1M □□□080C31	212
	480	2.1	586	1.9			22	5.667	GST05-1M □□□080C31	212
	480	3.1	586	2.9			22	5.667	GST06-1M □□□080C31	212
	465	2.0	568	1.9			22	5.850	GST04-2M □□□080C31	218
	425	1.9	519	1.8			24	6.400	GST04-2M □□□080C31	218
	386	1.8	472	1.7			26	7.040	GST04-2M □□□080C31	218
	371	1.4	453	1.3			28	7.333	GST05-1M □□□080C31	212
	371	2.9	453	2.7			28	7.333	GST06-1M □□□080C31	212
	371	3.1	453	2.9			28	7.333	GST07-1M □□□080C31	212
	340	1.6	415	1.5			30	8.000	GST04-2M □□□080C31	218
	333	3.1	407	2.9			31	8.163	GST05-2M □□□080C31	218
	306	1.0	373	1.0			34	8.900	GST05-1M □□□080C31	212
	306	2.1	373	1.9			34	8.900	GST06-1M □□□080C31	212
	306	2.7	373	2.6			34	8.900	GST07-1M □□□080C31	212
	302	1.5	369	1.4			34	9.010	GST04-2M □□□080C31	218
	302	2.9	369	2.7			34	9.010	GST05-2M □□□080C31	218
	276	1.4	337	1.3			37	9.856	GST04-2M □□□080C31	218
	272	2.7	332	2.5			38	10.000	GST05-2M □□□080C31	218
	243	1.2	296	1.1			42	11.200	GST04-2M □□□080C31	218
	243	2.5	296	2.3			42	11.200	GST05-2M □□□080C31	218
	242	1.2	295	1.1			43	11.250	GST06-1M □□□080C31	212
	242	2.2	295	2.0			43	11.250	GST07-1M □□□080C31	212
	216	1.2	264	1.1			47	12.571	GST04-2M □□□080C31	218
	209	2.3	255	2.2			49	13.016	GST05-2M □□□080C31	218
	190	0.9	232	0.9			54	14.286	GST04-2M □□□080C31	218
	190	2.1	231	2.0			54	14.356	GST05-2M □□□080C31	218
	177	1.1	216	1.1			58	15.400	GST04-2M □□□080C31	218
	168	2.3	205	2.1			61	16.190	GST05-2M □□□080C31	218
	155	0.9	190	0.8			66	17.500	GST04-2M □□□080C31	218

50 Hz: P_N=1.1 kW
60 Hz: P_N=1.3 kW

n_N	2720 r/min		3320 r/min				M_2 [Nm]	i		
f_N	50 Hz		60 Hz							
P_N	1.1 kW		1.3 kW							
	n_2 [r/min]	c	n_2 [r/min]	c						
	155	2.0	190	1.9			66	17.500	GST05-2M □□□080C31	218
	141	0.9	172	0.9			73	19.360	GST04-2M □□□080C31	218
	136	2.0	166	1.9			75	20.044	GST05-2M □□□080C31	218
	119	1.6	146	1.5			85	22.778	GST05-2M □□□080C31	218
	109	1.6	133	1.5			93	24.933	GST05-2M □□□080C31	218
	96	1.3	117	1.2			106	28.333	GST05-2M □□□080C31	218
	96	2.8	117	2.6			106	28.333	GST06-2M □□□080C31	218
	84	1.3	103	1.2			121	32.267	GST05-2M □□□080C31	218
	84	2.8	103	2.6			121	32.267	GST06-2M □□□080C31	218
	75	0.9	92	0.9			134	36.267	GST05-3M □□□080C31	224
	74	1.0	91	0.9			137	36.667	GST05-2M □□□080C31	218
	74	2.2	91	2.0			137	36.667	GST06-2M □□□080C31	218
	70	1.1	85	1.0			147	39.160	GST05-2M □□□080C31	218
	70	2.3	85	2.2			147	39.160	GST06-2M □□□080C31	218
	70	3.1	85	2.9			147	39.160	GST07-2M □□□080C31	218
	69	2.1	85	1.9			145	39.200	GST06-3M □□□080C31	224
	62	2.1	76	2.0			162	44.000	GST06-3M □□□080C31	224
	61	0.9	75	0.9			167	44.500	GST05-2M □□□080C31	218
	61	2.0	75	1.9			167	44.500	GST06-2M □□□080C31	218
	59	0.9	72	0.8			171	46.259	GST05-3M □□□080C31	224
	55	1.5	67	1.5			186	49.500	GST06-2M □□□080C31	218
	55	2.7	67	2.6			186	49.500	GST07-2M □□□080C31	218
	53	1.7	65	1.7			188	51.022	GST06-3M □□□080C31	224
	51	1.8	62	1.7			199	53.900	GST06-3M □□□080C31	224
	48	1.5	59	1.5			211	56.250	GST06-2M □□□080C31	218
	48	2.7	59	2.6			211	56.250	GST07-2M □□□080C31	218
	42	3.0	51	2.9			240	65.079	GST07-3M □□□080C31	224
	40	1.5	49	1.4			250	67.760	GST06-3M □□□080C31	224
	39	1.4	47	1.3			259	70.156	GST06-3M □□□080C31	224
	39	2.7	47	2.6			259	70.156	GST07-3M □□□080C31	224
	34	1.1	41	1.1			299	80.952	GST06-3M □□□080C31	224
	34	2.4	42	2.3			294	79.762	GST07-3M □□□080C31	224
	32	2.2	39	2.2			317	85.983	GST07-3M □□□080C31	224
	31	1.2	38	1.1			322	87.267	GST06-3M □□□080C31	224
	28	2.0	34	1.9			361	97.708	GST07-3M □□□080C31	224
	27	0.9	34	0.9			366	99.167	GST06-3M □□□080C31	224
	25	0.9	30	0.9			405	109.707	GST06-3M □□□080C31	224
	24	1.7	30	1.7			413	111.915	GST07-3M □□□080C31	224
	21	1.5	26	1.5			469	127.176	GST07-3M □□□080C31	224
	20	1.4	24	1.3			514	139.211	GST07-3M □□□080C31	224
	19	3.1	24	3.0			521	141.289	GST09-3M □□□080C31	224

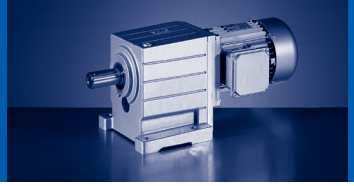

50 Hz: P_N=1.1 kW
60 Hz: P_N=1.3 kW

n_N	2720 r/min		3320 r/min				M_2 [Nm]	i		
f_N	50 Hz		60 Hz							
P_N	1.1 kW		1.3 kW							
	n_2 [r/min]	c	n_2 [r/min]	c						
	17	1.2	21	1.2			584	158.194	GST07-3M □□□080C31	224
	17	2.7	21	2.7			593	160.556	GST09-3M □□□080C31	224
	15	1.1	18	1.0			665	180.156	GST07-3M □□□080C31	224
	15	2.4	18	2.3			675	182.844	GST09-3M □□□080C31	224
	13	0.9	16	0.9			756	204.722	GST07-3M □□□080C31	224
	13	2.1	16	2.1			767	207.778	GST09-3M □□□080C31	224
	12	0.8					873	236.622	GST07-3M □□□080C31	224
	12	1.9	14	1.8			873	236.622	GST09-3M □□□080C31	224
	12	3.1	14	3.0			873	236.622	GST11-3M □□□080C31	224
	11	1.7	13	1.7			931	252.167	GST09-3M □□□080C31	224
	11	3.0	13	2.9			931	252.167	GST11-3M □□□080C31	224
	10	1.6	12	1.6			992	268.889	GST09-3M □□□080C31	224
	10	2.9	12	2.8			992	268.889	GST11-3M □□□080C31	224
	8.3	1.4	10	1.3			1204	326.333	GST09-3M □□□080C31	224
	8.3	2.4	10	2.3			1204	326.333	GST11-3M □□□080C31	224
	7.5	1.2	9.2	1.2			1340	363.000	GST09-3M □□□080C31	224
	7.5	2.0	9.2	1.9			1340	363.000	GST11-3M □□□080C31	224
	6.6	1.1	8.1	1.0			1522	412.500	GST09-3M □□□080C31	224
	6.6	1.9	8.1	1.8			1522	412.500	GST11-3M □□□080C31	224

50 Hz: P_N=1.1 kW
60 Hz: P_N=1.3 kW
87 Hz: P_N=2.0 kW

n_N	1390 r/min		1690 r/min		2500 r/min		M_2 [Nm]	i		
f_N	50 Hz		60 Hz		87 Hz					
P_N	1.1 kW		1.3 kW		2.0 kW					
	n_2 [r/min]	c	n_2 [r/min]	c	n_2 [r/min]	c				
	869	1.6	1056	1.6	1563	1.4	12	1.600	GST04-1M □□□080C42	212
	679	1.5	825	1.4	1221	1.3	15	2.048	GST04-1M □□□080C42	212
	621	1.5	755	1.4	1116	1.3	17	2.240	GST04-1M □□□080C42	212
	621	3.2	755	3.1	1116	2.7	17	2.240	GST05-1M □□□080C42	212
	487	1.2	592	1.1	875	1.0	21	2.857	GST04-1M □□□080C42	212
	487	2.5	592	2.4	875	2.1	21	2.857	GST05-1M □□□080C42	212
	470	1.8	572	1.7	846	1.5	22	2.956	GST04-2M □□□080C42	218
	470	2.9	572	2.8	846	2.5	22	2.956	GST05-2M □□□080C42	218
	417	1.7	507	1.6	750	1.4	24	3.333	GST04-2M □□□080C42	218
	417	3.2	507	3.1	750	2.7	24	3.333	GST05-2M □□□080C42	218
	397	1.0	483	0.9	714	0.8	26	3.500	GST04-1M □□□080C42	212
	397	2.1	483	2.0	714	1.8	26	3.500	GST05-1M □□□080C42	212
	343	1.5	417	1.5	617	1.3	30	4.053	GST04-2M □□□080C42	218
	343	2.7	417	2.6	617	2.3	30	4.053	GST05-2M □□□080C42	218
	305	1.6	371	1.5	549	1.3	34	4.556	GST05-1M □□□080C42	212
	305	3.1	371	3.0	549	2.6	34	4.556	GST06-1M □□□080C42	212
	304	1.4	370	1.4	547	1.2	34	4.571	GST04-2M □□□080C42	218
	304	2.7	370	2.6	547	2.3	34	4.571	GST05-2M □□□080C42	218
	268	1.3	326	1.3	482	1.1	38	5.187	GST04-2M □□□080C42	218
	268	2.4	326	2.3	482	2.0	38	5.187	GST05-2M □□□080C42	218
	249	3.1	303	3.0	448	2.6	42	5.583	GST07-1M □□□080C42	212
	245	1.3	298	1.2	441	1.1	42	5.667	GST05-1M □□□080C42	212
	245	2.5	298	2.4	441	2.1	42	5.667	GST06-1M □□□080C42	212
	238	1.2	289	1.2	427	1.1	43	5.850	GST04-2M □□□080C42	218
	238	2.4	289	2.3	427	2.0	43	5.850	GST05-2M □□□080C42	218
	217	1.2	264	1.1	391	1.0	47	6.400	GST04-2M □□□080C42	218
	217	2.2	264	2.2	391	1.9	47	6.400	GST05-2M □□□080C42	218
	197	1.1	240	1.1	355	0.9	52	7.040	GST04-2M □□□080C42	218
	192	2.0	234	2.0	345	1.7	53	7.238	GST05-2M □□□080C42	218
	190	1.8	231	1.8	341	1.6	55	7.333	GST06-1M □□□080C42	212
	190	2.9	231	2.8	341	2.4	55	7.333	GST07-1M □□□080C42	212
	174	1.0	211	1.0	313	0.9	59	8.000	GST04-2M □□□080C42	218
	170	1.9	207	1.9	306	1.6	60	8.163	GST05-2M □□□080C42	218
	156	1.3	190	1.2	281	1.1	66	8.900	GST06-1M □□□080C42	212
	156	2.3	190	2.2	281	1.9	66	8.900	GST07-1M □□□080C42	212
	154	1.0	188	0.9			66	9.010	GST04-2M □□□080C42	218
	154	1.8	188	1.7	278	1.5	66	9.010	GST05-2M □□□080C42	218
	141	0.9	172	0.9			72	9.856	GST04-2M □□□080C42	218
	139	1.7	169	1.6	250	1.4	73	10.000	GST05-2M □□□080C42	218
	124	1.4	150	1.3	222	1.2	84	11.250	GST07-1M □□□080C42	212
	124	1.6	151	1.5	223	1.3	82	11.200	GST05-2M □□□080C42	218

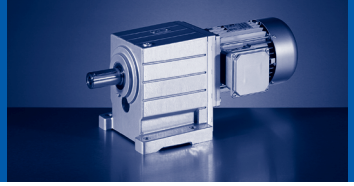

50 Hz: P_N=1.1 kW
60 Hz: P_N=1.3 kW
87 Hz: P_N=2.0 kW

n_N	1390 r/min		1690 r/min		2500 r/min		M_2 [Nm]	i		
f_N	50 Hz		60 Hz		87 Hz					
P_N	1.1 kW		1.3 kW		2.0 kW					
	n_2 [r/min]	c	n_2 [r/min]	c	n_2 [r/min]	c				
	111	3.2	134	3.1	199	2.7	92	12.571	GST06-2M □□□080C42	218
	107	1.4	130	1.4	192	1.2	95	13.016	GST05-2M □□□080C42	218
	97	1.3	118	1.3	174	1.1	105	14.356	GST05-2M □□□080C42	218
	97	2.9	118	2.8	175	2.5	105	14.286	GST06-2M □□□080C42	218
	90	2.8	110	2.8	162	2.7	113	15.400	GST06-2M □□□080C42	218
	86	1.3	104	1.3	154	1.2	119	16.190	GST05-2M □□□080C42	218
	79	1.1	97	1.1	143	1.1	128	17.500	GST05-2M □□□080C42	218
	79	2.4	97	2.4	143	2.3	128	17.500	GST06-2M □□□080C42	218
	69	1.1	84	1.1	125	1.0	147	20.044	GST05-2M □□□080C42	218
	69	2.4	84	2.4	125	2.3	147	20.044	GST06-2M □□□080C42	218
	61	0.9	74	0.9	110	0.8	167	22.778	GST05-2M □□□080C42	218
	61	1.9	74	1.9	110	1.8	167	22.778	GST06-2M □□□080C42	218
	57	3.1	69	3.1	102	3.0	180	24.567	GST07-2M □□□080C42	218
	56	0.9	68	0.9	100	0.9	183	24.933	GST05-2M □□□080C42	218
	56	2.0	68	2.0	100	1.9	183	24.933	GST06-2M □□□080C42	218
	50	3.1	61	3.1	90	3.0	205	27.917	GST07-2M □□□080C42	218
	49	1.5	60	1.5	88	1.5	208	28.333	GST06-2M □□□080C42	218
	43	1.5	52	1.5	78	1.5	237	32.267	GST06-2M □□□080C42	218
	43	2.9	52	2.9	78	2.8	237	32.267	GST07-2M □□□080C42	218
	38	1.2	46	1.2	68	1.2	269	36.667	GST06-2M □□□080C42	218
	38	2.6	46	2.6	68	2.5	269	36.667	GST07-2M □□□080C42	218
	36	1.1	43	1.1	64	1.1	283	39.200	GST06-3M □□□080C42	224
	36	1.3	43	1.3	64	1.2	287	39.160	GST06-2M □□□080C42	218
	36	2.3	43	2.3	64	2.2	287	39.160	GST07-2M □□□080C42	218
	36	2.4	43	2.4	64	2.3	283	39.200	GST07-3M □□□080C42	224
	32	1.1	38	1.1	57	1.1	318	44.000	GST06-3M □□□080C42	224
	32	2.2	38	2.2	57	2.2	318	44.000	GST07-3M □□□080C42	224
	31	1.0	38	1.0	56	1.0	326	44.500	GST06-2M □□□080C42	218
	31	2.2	38	2.2	56	2.2	326	44.500	GST07-2M □□□080C42	218
	28	1.4	34	1.4	51	1.4	363	49.500	GST07-2M □□□080C42	218
	27	0.9	33	0.9	49	0.9	369	51.022	GST06-3M □□□080C42	224
	27	1.9	33	1.9	49	1.9	369	51.022	GST07-3M □□□080C42	224
	26	0.9	31	0.9	46	0.9	389	53.900	GST06-3M □□□080C42	224
	26	1.8	31	1.8	46	1.8	389	53.900	GST07-3M □□□080C42	224
	25	1.4	30	1.4	44	1.4	412	56.250	GST07-2M □□□080C42	218
	21	1.5	26	1.5	38	1.5	470	65.079	GST07-3M □□□080C42	224
	20	1.4	24	1.4	36	1.4	507	70.156	GST07-3M □□□080C42	224
	19	2.9	24	2.9	35	2.9	519	71.867	GST09-3M □□□080C42	224
	17	1.2	21	1.2	31	1.2	576	79.762	GST07-3M □□□080C42	224
	17	2.7	21	2.7	31	2.7	590	81.667	GST09-3M □□□080C42	224
	16	1.1	20	1.1	29	1.1	621	85.983	GST07-3M □□□080C42	224

50 Hz: P_N=1.1 kW
60 Hz: P_N=1.3 kW
87 Hz: P_N=2.0 kW

n_N	1390 r/min		1690 r/min		2500 r/min		M_2 [Nm]	i		
f_N	50 Hz		60 Hz		87 Hz					
P_N	1.1 kW		1.3 kW		2.0 kW					
	n_2 [r/min]	c	n_2 [r/min]	c	n_2 [r/min]	c				
	15	2.4	18	2.4	27	2.4	676	93.541	GST09-3M □□□080C42	224
	14	1.0	17	1.0	26	1.0	706	97.708	GST07-3M □□□080C42	224
	14	2.2	17	2.2	25	2.2	716	99.167	GST09-3M □□□080C42	224
	12	0.9	15	0.9	22	0.9	808	111.915	GST07-3M □□□080C42	224
	12	2.0	15	2.0	22	2.0	820	113.585	GST09-3M □□□080C42	224
	11	1.7	13	1.7	19	1.7	932	129.074	GST09-3M □□□080C42	224
	11	3.0	13	3.0	19	3.0	932	129.074	GST11-3M □□□080C42	224
	9.8	1.6	12	1.6	18	1.6	1020	141.289	GST09-3M □□□080C42	224
	9.5	2.5	12	2.5	17	2.5	1062	146.993	GST11-3M □□□080C42	224
	8.8	2.5	11	2.5	16	2.5	1143	158.194	GST11-3M □□□080C42	224
	8.7	1.4	11	1.4	16	1.4	1160	160.556	GST09-3M □□□080C42	224
	7.7	2.1	9.4	2.1	14	2.1	1301	180.156	GST11-3M □□□080C42	224
	7.6	1.2	9.2	1.2	14	1.2	1321	182.844	GST09-3M □□□080C42	224
	6.7	1.1	8.1	1.1	12	1.1	1501	207.778	GST09-3M □□□080C42	224
	6.7	1.9	8.1	1.9	12	1.9	1501	207.778	GST11-3M □□□080C42	224
	5.9	0.9	7.1	0.9	11	0.9	1709	236.622	GST09-3M □□□080C42	224
	5.9	1.6	7.1	1.6	11	1.6	1709	236.622	GST11-3M □□□080C42	224
	5.5	0.9	6.7	0.9	9.9	0.9	1821	252.167	GST09-3M □□□080C42	224
	5.5	1.5	6.7	1.5	9.9	1.5	1821	252.167	GST11-3M □□□080C42	224
	5.2	0.8	6.3	0.8	9.3	0.8	1942	268.889	GST09-3M □□□080C42	224
	5.2	1.5	6.3	1.5	9.3	1.5	1942	268.889	GST11-3M □□□080C42	224
	4.3	1.2	5.2	1.2	7.7	1.2	2357	326.333	GST11-3M □□□080C42	224
	3.8	1.0	4.7	1.0	6.9	1.0	2622	363.000	GST11-3M □□□080C42	224
	3.4	1.0	4.1	1.0	6.1	1.0	2979	412.500	GST11-3M □□□080C42	224

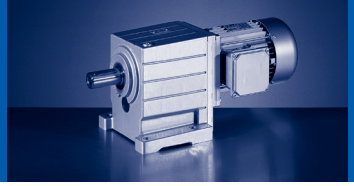

50 Hz: P_N=1.5 kW
60 Hz: P_N=1.8 kW

n_N	2710 r/min		3310 r/min				M_2 [Nm]	i		
f_N	50 Hz		60 Hz							
P_N	1.5 kW		1.8 kW							
	n_2 [r/min]	c	n_2 [r/min]	c						
	1694	1.9	2069	1.8			8.0	1.600	GST04-1M □□□090C11	212
	1324	1.8	1617	1.6			11	2.048	GST04-1M □□□090C11	212
	1210	1.7	1478	1.6			12	2.240	GST04-1M □□□090C11	212
	949	1.4	1159	1.3			15	2.857	GST04-1M □□□090C11	212
	949	2.9	1159	2.7			15	2.857	GST05-1M □□□090C11	212
	917	2.1	1120	2.0			15	2.956	GST04-2M □□□090C11	218
	813	2.0	993	1.9			17	3.333	GST04-2M □□□090C11	218
	774	1.1	946	1.1			18	3.500	GST04-1M □□□090C11	212
	774	2.4	946	2.3			18	3.500	GST05-1M □□□090C11	212
	669	1.8	817	1.7			21	4.053	GST04-2M □□□090C11	218
	669	3.2	817	3.0			21	4.053	GST05-2M □□□090C11	218
	595	1.9	727	1.8			24	4.556	GST05-1M □□□090C11	212
	593	1.7	724	1.6			23	4.571	GST04-2M □□□090C11	218
	593	3.2	724	3.0			23	4.571	GST05-2M □□□090C11	218
	522	1.5	638	1.4			27	5.187	GST04-2M □□□090C11	218
	522	2.8	638	2.6			27	5.187	GST05-2M □□□090C11	218
	478	1.5	584	1.4			30	5.667	GST05-1M □□□090C11	212
	478	2.9	584	2.7			30	5.667	GST06-1M □□□090C11	212
	463	1.5	566	1.4			30	5.850	GST04-2M □□□090C11	218
	463	2.8	566	2.6			30	5.850	GST05-2M □□□090C11	218
	423	1.4	517	1.3			33	6.400	GST04-2M □□□090C11	218
	423	2.6	517	2.5			33	6.400	GST05-2M □□□090C11	218
	385	1.3	470	1.2			36	7.040	GST04-2M □□□090C11	218
	374	2.4	457	2.2			37	7.238	GST05-2M □□□090C11	218
	370	2.2	451	2.0			38	7.333	GST06-1M □□□090C11	212
	339	1.2	414	1.1			41	8.000	GST04-2M □□□090C11	218
	332	2.3	406	2.1			42	8.163	GST05-2M □□□090C11	218
	305	1.5	372	1.4			46	8.900	GST06-1M □□□090C11	212
	305	3.2	372	3.0			46	8.900	GST07-1M □□□090C11	212
	301	1.1	367	1.0			46	9.010	GST04-2M □□□090C11	218
	301	2.1	367	2.0			46	9.010	GST05-2M □□□090C11	218
	275	1.1	336	1.0			51	9.856	GST04-2M □□□090C11	218
	271	2.0	331	1.9			51	10.000	GST05-2M □□□090C11	218
	242	0.9	296	0.8			57	11.200	GST04-2M □□□090C11	218
	242	1.8	296	1.7			57	11.200	GST05-2M □□□090C11	218
	241	1.9	294	1.8			59	11.250	GST07-1M □□□090C11	212
	241	3.1	294	2.9			59	11.250	GST09-1M □□□090C11	212
	216	0.9	263	0.8			65	12.571	GST04-2M □□□090C11	218
	208	1.7	254	1.6			67	13.016	GST05-2M □□□090C11	218
	189	1.6	231	1.5			74	14.356	GST05-2M □□□090C11	218
	176	0.8					79	15.400	GST04-2M □□□090C11	218

50 Hz: P_N=1.5 kW
60 Hz: P_N=1.8 kW

n_N	2710 r/min		3310 r/min				M_2 [Nm]	i		
f_N	50 Hz		60 Hz							
P_N	1.5 kW		1.8 kW							
	n_2 [r/min]	c	n_2 [r/min]	c						
	167	1.7	204	1.6			83	16.190	GST05-2M □□□090C11	218
	155	1.5	189	1.4			90	17.500	GST05-2M □□□090C11	218
	155	3.3	189	3.0			90	17.500	GST06-2M □□□090C11	218
	135	1.5	165	1.4			103	20.044	GST05-2M □□□090C11	218
	135	3.2	165	3.0			103	20.044	GST06-2M □□□090C11	218
	119	1.2	145	1.1			117	22.778	GST05-2M □□□090C11	218
	119	2.5	145	2.4			117	22.778	GST06-2M □□□090C11	218
	109	1.2	133	1.1			128	24.933	GST05-2M □□□090C11	218
	109	2.6	133	2.5			128	24.933	GST06-2M □□□090C11	218
	96	0.9	117	0.9			145	28.333	GST05-2M □□□090C11	218
	96	2.0	117	1.9			145	28.333	GST06-2M □□□090C11	218
	84	2.1	103	1.9			166	32.267	GST06-2M □□□090C11	218
	74	1.6	90	1.5			188	36.667	GST06-2M □□□090C11	218
	69	1.5	84	1.4			198	39.200	GST06-3M □□□090C11	224
	69	1.7	85	1.6			201	39.160	GST06-2M □□□090C11	218
	62	1.5	75	1.5			222	44.000	GST06-3M □□□090C11	224
	62	3.2	75	3.1			222	44.000	GST07-3M □□□090C11	224
	61	1.4	74	1.4			228	44.500	GST06-2M □□□090C11	218
	61	3.1	74	3.0			228	44.500	GST07-2M □□□090C11	218
	55	2.4	67	2.3			254	49.500	GST07-2M □□□090C11	218
	53	1.3	65	1.2			258	51.022	GST06-3M □□□090C11	224
	53	2.7	65	2.6			258	51.022	GST07-3M □□□090C11	224
	50	1.3	61	1.2			272	53.900	GST06-3M □□□090C11	224
	50	2.6	61	2.5			272	53.900	GST07-3M □□□090C11	224
	48	2.4	59	2.3			289	56.250	GST07-2M □□□090C11	218
	42	2.2	51	2.1			329	65.079	GST07-3M □□□090C11	224
	39	1.0	47	1.0			354	70.156	GST06-3M □□□090C11	224
	39	2.0	47	1.9			354	70.156	GST07-3M □□□090C11	224
	34	0.8					409	80.952	GST06-3M □□□090C11	224
	34	1.8	42	1.7			403	79.762	GST07-3M □□□090C11	224
	32	1.6	39	1.6			434	85.983	GST07-3M □□□090C11	224
	31	0.8	38	0.8			441	87.267	GST06-3M □□□090C11	224
	28	1.4	34	1.4			494	97.708	GST07-3M □□□090C11	224
	27	3.2	33	3.1			501	99.167	GST09-3M □□□090C11	224
	24	1.3	30	1.2			565	111.915	GST07-3M □□□090C11	224
	24	2.8	29	2.7			574	113.585	GST09-3M □□□090C11	224
	21	1.1	26	1.1			642	127.176	GST07-3M □□□090C11	224
	21	2.5	26	2.4			652	129.074	GST09-3M □□□090C11	224
	20	1.0	24	1.0			703	139.211	GST07-3M □□□090C11	224
	19	2.3	23	2.2			714	141.289	GST09-3M □□□090C11	224
	17	0.9	21	0.9			799	158.194	GST07-3M □□□090C11	224

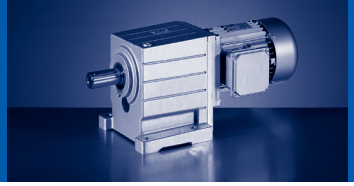

50 Hz: P_N=1.5 kW
60 Hz: P_N=1.8 kW

n_N	2710 r/min		3310 r/min				M_2 [Nm]	i		
f_N	50 Hz		60 Hz							
P_N	1.5 kW		1.8 kW							
	n_2 [r/min]	c	n_2 [r/min]	c						
	17	2.0	21	1.9			811	160.556	GST09-3M □□□090C11	224
	15	1.8	18	1.7			924	182.844	GST09-3M □□□090C11	224
	15	3.0	18	2.9			910	180.156	GST11-3M □□□090C11	224
	13	1.6	16	1.5			1050	207.778	GST09-3M □□□090C11	224
	13	2.7	16	2.6			1050	207.778	GST11-3M □□□090C11	224
	12	1.4	14	1.3			1195	236.622	GST09-3M □□□090C11	224
	12	2.3	14	2.2			1195	236.622	GST11-3M □□□090C11	224
	11	1.3	13	1.2			1274	252.167	GST09-3M □□□090C11	224
	11	2.2	13	2.1			1274	252.167	GST11-3M □□□090C11	224
	10	1.2	12	1.2			1358	268.889	GST09-3M □□□090C11	224
	10	2.1	12	2.0			1358	268.889	GST11-3M □□□090C11	224
	8.3	1.0	10	1.0			1648	326.333	GST09-3M □□□090C11	224
	8.3	1.7	10	1.7			1648	326.333	GST11-3M □□□090C11	224
	7.5	1.5	9.1	1.4			1834	363.000	GST11-3M □□□090C11	224
	7.5	3.2	9.1	3.1			1834	363.000	GST14-3M □□□090C11	224
	6.6	1.4	8	1.3			2084	412.500	GST11-3M □□□090C11	224
	6.6	2.8	8	2.8			2084	412.500	GST14-3M □□□090C11	224

50 Hz: P_N=1.5 kW
60 Hz: P_N=1.8 kW
87 Hz: P_N=2.7 kW

n_N	1410 r/min		1710 r/min		2520 r/min		M_2 [Nm]	i		
f_N	50 Hz		60 Hz		87 Hz					
P_N	1.5 kW		1.8 kW		2.7 kW					
	n_2 [r/min]	c	n_2 [r/min]	c	n_2 [r/min]	c				
	872	1.2	1059	1.1	1566	1.0	16	1.600	GST04-1M □□□090C32	212
	872	2.8	1059	2.7	1566	2.3	16	1.600	GST05-1M □□□090C32	212
	681	1.1	828	1.1	1223	0.9	21	2.048	GST04-1M □□□090C32	212
	681	2.5	828	2.4	1223	2.1	21	2.048	GST05-1M □□□090C32	212
	623	1.1	757	1.1	1118	0.9	23	2.240	GST04-1M □□□090C32	212
	623	2.3	757	2.3	1118	2.0	23	2.240	GST05-1M □□□090C32	212
	488	0.9	593	0.8			29	2.857	GST04-1M □□□090C32	212
	488	1.8	593	1.8	877	1.6	29	2.857	GST05-1M □□□090C32	212
	488	3.2	593	3.1	877	2.7	29	2.857	GST06-1M □□□090C32	212
	472	1.3	574	1.3	848	1.1	29	2.956	GST04-2M □□□090C32	218
	472	2.1	574	2.1	848	1.8	29	2.956	GST05-2M □□□090C32	218
	419	1.3	509	1.2	752	1.1	33	3.333	GST04-2M □□□090C32	218
	419	2.4	509	2.3	752	2.0	33	3.333	GST05-2M □□□090C32	218
	399	1.5	484	1.5	716	1.3	35	3.500	GST05-1M □□□090C32	212
	399	3.0	484	2.8	716	2.5	35	3.500	GST06-1M □□□090C32	212
	344	1.1	418	1.1	618	0.9	40	4.053	GST04-2M □□□090C32	218
	344	2.0	418	1.9	618	1.7	40	4.053	GST05-2M □□□090C32	218
	306	1.2	372	1.1	550	1.0	46	4.556	GST05-1M □□□090C32	212
	306	2.3	372	2.2	550	1.9	46	4.556	GST06-1M □□□090C32	212
	305	1.1	371	1.0	548	0.9	46	4.571	GST04-2M □□□090C32	218
	305	2.0	371	1.9	548	1.7	46	4.571	GST05-2M □□□090C32	218
	269	1.0	327	0.9	483	0.8	52	5.187	GST04-2M □□□090C32	218
	269	1.7	327	1.7	483	1.5	52	5.187	GST05-2M □□□090C32	218
	250	2.8	304	2.7	449	2.4	57	5.583	GST07-1M □□□090C32	212
	246	0.9	299	0.9			57	5.667	GST05-1M □□□090C32	212
	246	1.8	299	1.8	442	1.5	57	5.667	GST06-1M □□□090C32	212
	238	0.9	290	0.9			58	5.850	GST04-2M □□□090C32	218
	238	1.7	290	1.7	428	1.5	58	5.850	GST05-2M □□□090C32	218
	218	0.9	265	0.8			64	6.400	GST04-2M □□□090C32	218
	218	1.6	265	1.6	391	1.4	64	6.400	GST05-2M □□□090C32	218
	198	0.8					70	7.040	GST04-2M □□□090C32	218
	193	1.5	234	1.4	346	1.3	72	7.238	GST05-2M □□□090C32	218
	190	1.4	231	1.3	342	1.1	74	7.333	GST06-1M □□□090C32	212
	190	2.4	231	2.3	342	2.0	74	7.333	GST07-1M □□□090C32	212
	190	2.8	231	2.7	342	2.4	74	7.333	GST09-1M □□□090C32	212
	171	1.4	208	1.4	307	1.2	81	8.163	GST05-2M □□□090C32	218
	171	3.1	208	3.0	307	2.6	81	8.163	GST06-2M □□□090C32	218
	157	1.0	190	0.9			90	8.900	GST06-1M □□□090C32	212
	157	2.0	190	1.9	282	1.7	90	8.900	GST07-1M □□□090C32	212
	157	2.5	190	2.4	282	2.1	90	8.900	GST09-1M □□□090C32	212
	155	1.3	188	1.3	278	1.1	90	9.010	GST05-2M □□□090C32	218

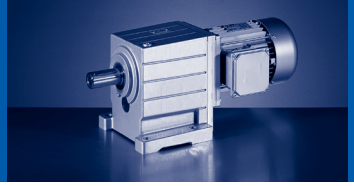

50 Hz: P_N=1.5 kW
60 Hz: P_N=1.8 kW
87 Hz: P_N=2.7 kW

n_N	1410 r/min		1710 r/min		2520 r/min		M_2 [Nm]	i		
f_N	50 Hz		60 Hz		87 Hz					
P_N	1.5 kW		1.8 kW		2.7 kW					
	n_2 [r/min]	c	n_2 [r/min]	c	n_2 [r/min]	c				
	155	2.9	188	2.8	278	2.5	90	9.010	GST06-2M □□□090C32	218
	140	1.3	170	1.2	251	1.1	100	10.000	GST05-2M □□□090C32	218
	140	2.7	170	2.6	251	2.3	100	10.000	GST06-2M □□□090C32	218
	125	1.1	151	1.1	224	1.0	112	11.200	GST05-2M □□□090C32	218
	125	2.5	151	2.4	224	2.1	112	11.200	GST06-2M □□□090C32	218
	124	1.2	151	1.2	223	1.0	114	11.250	GST07-1M □□□090C32	212
	124	1.9	151	1.8	223	1.6	114	11.250	GST09-1M □□□090C32	212
	111	2.4	135	2.3	199	2.0	125	12.571	GST06-2M □□□090C32	218
	107	1.1	130	1.0	193	0.9	130	13.016	GST05-2M □□□090C32	218
	98	2.2	119	2.1	175	1.8	142	14.286	GST06-2M □□□090C32	218
	97	1.0	118	0.9	175	0.8	143	14.356	GST05-2M □□□090C32	218
	91	2.1	110	2.1	163	2.0	153	15.400	GST06-2M □□□090C32	218
	86	0.9	105	0.9	155	0.9	161	16.190	GST05-2M □□□090C32	218
	80	0.8	97	0.8			174	17.500	GST05-2M □□□090C32	218
	80	1.8	97	1.8	143	1.7	174	17.500	GST06-2M □□□090C32	218
	70	1.8	85	1.8	125	1.7	200	20.044	GST06-2M □□□090C32	218
	61	1.4	74	1.4	110	1.3	227	22.778	GST06-2M □□□090C32	218
	61	3.0	74	3.0	110	2.9	227	22.778	GST07-2M □□□090C32	218
	57	2.8	69	2.8	102	2.7	245	24.567	GST07-2M □□□090C32	218
	56	1.5	68	1.5	101	1.4	248	24.933	GST06-2M □□□090C32	218
	50	2.5	61	2.5	90	2.4	278	27.917	GST07-2M □□□090C32	218
	49	1.1	60	1.1	88	1.1	282	28.333	GST06-2M □□□090C32	218
	43	1.1	53	1.1	78	1.1	322	32.267	GST06-2M □□□090C32	218
	43	2.2	53	2.2	78	2.1	322	32.267	GST07-2M □□□090C32	218
	43	2.8	53	2.8	78	2.7	322	32.267	GST09-2M □□□090C32	218
	38	0.9	46	0.9	68	0.8	365	36.667	GST06-2M □□□090C32	218
	38	1.9	46	1.9	68	1.8	365	36.667	GST07-2M □□□090C32	218
	38	2.8	46	2.8	68	2.7	365	36.667	GST09-2M □□□090C32	218
	36	0.8	43	0.8			385	39.200	GST06-3M □□□090C32	224
	36	0.9	43	0.9	64	0.9	390	39.160	GST06-2M □□□090C32	218
	36	1.8	43	1.8	64	1.7	385	39.200	GST07-3M □□□090C32	224
	36	1.8	43	1.8	64	1.7	390	39.160	GST07-2M □□□090C32	218
	36	2.5	43	2.5	64	2.4	390	39.160	GST09-2M □□□090C32	218
	32	1.6	39	1.6	57	1.6	432	44.000	GST07-3M □□□090C32	224
	32	3.0	39	3.0	58	3.0	425	43.267	GST09-3M □□□090C32	224
	31	1.6	38	1.6	56	1.6	443	44.500	GST07-2M □□□090C32	218
	31	2.5	38	2.5	56	2.5	443	44.500	GST09-2M □□□090C32	218
	28	1.2	34	1.2	51	1.2	493	49.500	GST07-2M □□□090C32	218
	28	1.9	34	1.9	51	1.9	493	49.500	GST09-2M □□□090C32	218
	28	3.0	35	3.0	51	3.0	483	49.167	GST09-3M □□□090C32	224
	27	1.4	33	1.4	49	1.4	501	51.022	GST07-3M □□□090C32	224

50 Hz: P_N=1.5 kW
60 Hz: P_N=1.8 kW
87 Hz: P_N=2.7 kW

n_N	1410 r/min		1710 r/min		2520 r/min		M_2 [Nm]	i		
f_N	50 Hz		60 Hz		87 Hz					
P_N	1.5 kW		1.8 kW		2.7 kW					
	n_2 [r/min]	c	n_2 [r/min]	c	n_2 [r/min]	c				
	26	1.3	31	1.3	47	1.3	529	53.900	GST07-3M □□□090C32	224
	26	2.7	32	2.7	47	2.7	521	53.044	GST09-3M □□□090C32	224
	25	1.2	30	1.2	45	1.2	560	56.250	GST07-2M □□□090C32	218
	25	1.9	30	1.9	45	1.9	560	56.250	GST09-2M □□□090C32	218
	23	2.7	28	2.7	42	2.7	592	60.278	GST09-3M □□□090C32	224
	21	1.1	26	1.1	39	1.1	639	65.079	GST07-3M □□□090C32	224
	20	1.0	24	1.0	36	1.0	688	70.156	GST07-3M □□□090C32	224
	19	2.1	24	2.1	35	2.1	705	71.867	GST09-3M □□□090C32	224
	18	0.9	21	0.9	31	0.9	783	79.762	GST07-3M □□□090C32	224
	17	2.0	21	2.0	31	2.0	801	81.667	GST09-3M □□□090C32	224
	16	0.8	20	0.8	29	0.8	844	85.983	GST07-3M □□□090C32	224
	15	1.8	18	1.8	27	1.8	918	93.541	GST09-3M □□□090C32	224
	14	1.6	17	1.6	25	1.6	973	99.167	GST09-3M □□□090C32	224
	12	1.5	15	1.5	22	1.5	1115	113.585	GST09-3M □□□090C32	224
	11	1.3	13	1.3	19	1.3	1267	129.074	GST09-3M □□□090C32	224
	11	2.2	13	2.2	19	2.2	1267	129.074	GST11-3M □□□090C32	224
	9.9	1.2	12	1.2	18	1.2	1387	141.289	GST09-3M □□□090C32	224
	9.5	1.9	12	1.9	17	1.9	1442	146.993	GST11-3M □□□090C32	224
	8.8	1.8	11	1.8	16	1.8	1552	158.194	GST11-3M □□□090C32	224
	8.7	1.0	11	1.0	16	1.0	1576	160.556	GST09-3M □□□090C32	224
	7.7	1.5	9.4	1.5	14	1.5	1768	180.156	GST11-3M □□□090C32	224
	7.6	0.9	9.3	0.9	14	0.9	1794	182.844	GST09-3M □□□090C32	224
	6.8	2.8	8.3	2.8	12	2.8	2009	204.722	GST14-3M □□□090C32	224
	6.7	1.4	8.2	1.4	12	1.4	2039	207.778	GST11-3M □□□090C32	224
	5.9	1.2	7.2	1.2	11	1.2	2322	236.622	GST11-3M □□□090C32	224
	5.9	2.5	7.2	2.5	11	2.5	2322	236.622	GST14-3M □□□090C32	224
	5.6	2.4	6.8	2.4	10	2.4	2438	248.458	GST14-3M □□□090C32	224
	5.5	1.1	6.7	1.1	9.9	1.1	2475	252.167	GST11-3M □□□090C32	224
	5.2	1.1	6.3	1.1	9.3	1.1	2639	268.889	GST11-3M □□□090C32	224
	5.2	2.2	6.3	2.2	9.3	2.2	2639	268.889	GST14-3M □□□090C32	224
	4.3	0.9	5.2	0.9	7.7	0.9	3202	326.333	GST11-3M □□□090C32	224
	4.3	1.9	5.2	1.9	7.7	1.9	3202	326.333	GST14-3M □□□090C32	224
	3.8	1.6	4.7	1.6	6.9	1.6	3562	363.000	GST14-3M □□□090C32	224
	3.4	1.5	4.1	1.5	6.1	1.5	4048	412.500	GST14-3M □□□090C32	224

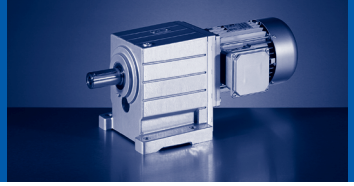

50 Hz: P_N=2.2 kW
60 Hz: P_N=2.6 kW

n_N	2730 r/min		3330 r/min				M_2 [Nm]	i		
f_N	50 Hz		60 Hz							
P_N	2.2 kW		2.6 kW							
	n_2 [r/min]	c	n_2 [r/min]	c						
	1706	1.3	2081	1.2			12	1.600	GST04-1M □□□090C31	212
	1706	3.0	2081	2.8			12	1.600	GST05-1M □□□090C31	212
	1333	1.2	1626	1.1			16	2.048	GST04-1M □□□090C31	212
	1333	2.8	1626	2.6			16	2.048	GST05-1M □□□090C31	212
	1219	1.2	1487	1.1			17	2.240	GST04-1M □□□090C31	212
	1219	2.6	1487	2.4			17	2.240	GST05-1M □□□090C31	212
	956	1.0	1166	0.9			22	2.857	GST04-1M □□□090C31	212
	956	2.0	1166	1.9			22	2.857	GST05-1M □□□090C31	212
	924	1.5	1127	1.4			22	2.956	GST04-2M □□□090C31	218
	924	2.3	1127	2.2			22	2.956	GST05-2M □□□090C31	218
	819	1.4	999	1.3			25	3.333	GST04-2M □□□090C31	218
	819	2.6	999	2.4			25	3.333	GST05-2M □□□090C31	218
	780	1.7	951	1.6			27	3.500	GST05-1M □□□090C31	212
	780	3.2	951	3.0			27	3.500	GST06-1M □□□090C31	212
	674	1.2	822	1.1			30	4.053	GST04-2M □□□090C31	218
	674	2.2	822	2.1			30	4.053	GST05-2M □□□090C31	218
	599	1.3	731	1.2			35	4.556	GST05-1M □□□090C31	212
	599	2.5	731	2.3			35	4.556	GST06-1M □□□090C31	212
	597	1.2	728	1.1			34	4.571	GST04-2M □□□090C31	218
	597	2.2	728	2.1			34	4.571	GST05-2M □□□090C31	218
	526	1.1	642	1.0			39	5.187	GST04-2M □□□090C31	218
	526	1.9	642	1.8			39	5.187	GST05-2M □□□090C31	218
	489	3.1	596	2.9			42	5.583	GST07-1M □□□090C31	212
	482	1.0	588	1.0			43	5.667	GST05-1M □□□090C31	212
	482	2.0	588	1.9			43	5.667	GST06-1M □□□090C31	212
	467	1.0	569	0.9			44	5.850	GST04-2M □□□090C31	218
	467	1.9	569	1.8			44	5.850	GST05-2M □□□090C31	218
	427	0.9	520	0.9			48	6.400	GST04-2M □□□090C31	218
	427	1.8	520	1.7			48	6.400	GST05-2M □□□090C31	218
	388	0.9	473	0.8			53	7.040	GST04-2M □□□090C31	218
	377	1.6	460	1.5			54	7.238	GST05-2M □□□090C31	218
	372	1.5	454	1.4			56	7.333	GST06-1M □□□090C31	212
	372	2.6	454	2.4			56	7.333	GST07-1M □□□090C31	212
	372	3.1	454	2.9			56	7.333	GST09-1M □□□090C31	212
	341	0.8					60	8.000	GST04-2M □□□090C31	218
	334	1.6	408	1.5			61	8.163	GST05-2M □□□090C31	218
	307	1.0	374	1.0			68	8.900	GST06-1M □□□090C31	212
	307	2.2	374	2.0			68	8.900	GST07-1M □□□090C31	212
	307	2.7	374	2.5			68	8.900	GST09-1M □□□090C31	212
	303	1.5	370	1.4			67	9.010	GST05-2M □□□090C31	218
	303	3.2	370	3.0			67	9.010	GST06-2M □□□090C31	218

50 Hz: P_N=2.2 kW
60 Hz: P_N=2.6 kW

n_N	2730 r/min		3330 r/min				M_2 [Nm]	i		
f_N	50 Hz		60 Hz							
P_N	2.2 kW		2.6 kW							
	n_2 [r/min]	c	n_2 [r/min]	c						
	273	1.4	333	1.3			75	10.000	GST05-2M □□□090C31	218
	273	3.0	333	2.8			75	10.000	GST06-2M □□□090C31	218
	244	1.3	297	1.2			84	11.200	GST05-2M □□□090C31	218
	244	2.7	297	2.6			84	11.200	GST06-2M □□□090C31	218
	243	1.3	296	1.2			85	11.250	GST07-1M □□□090C31	212
	243	2.1	296	2.0			85	11.250	GST09-1M □□□090C31	212
	217	2.6	265	2.4			94	12.571	GST06-2M □□□090C31	218
	210	1.2	256	1.1			97	13.016	GST05-2M □□□090C31	218
	191	2.4	233	2.2			107	14.286	GST06-2M □□□090C31	218
	190	1.1	232	1.0			107	14.356	GST05-2M □□□090C31	218
	177	2.6	216	2.4			115	15.400	GST06-2M □□□090C31	218
	169	1.1	206	1.1			121	16.190	GST05-2M □□□090C31	218
	156	1.0	190	1.0			131	17.500	GST05-2M □□□090C31	218
	156	2.2	190	2.1			131	17.500	GST06-2M □□□090C31	218
	136	1.0	166	0.9			150	20.044	GST05-2M □□□090C31	218
	136	2.2	166	2.0			150	20.044	GST06-2M □□□090C31	218
	120	1.7	146	1.6			170	22.778	GST06-2M □□□090C31	218
	110	0.8					186	24.933	GST05-2M □□□090C31	218
	110	1.8	134	1.7			186	24.933	GST06-2M □□□090C31	218
	98	3.1	119	2.9			208	27.917	GST07-2M □□□090C31	218
	96	1.4	118	1.3			212	28.333	GST06-2M □□□090C31	218
	85	1.4	103	1.3			241	32.267	GST06-2M □□□090C31	218
	85	2.7	103	2.6			241	32.267	GST07-2M □□□090C31	218
	75	1.1	91	1.0			274	36.667	GST06-2M □□□090C31	218
	75	2.4	91	2.2			274	36.667	GST07-2M □□□090C31	218
	70	1.0	85	1.0			288	39.200	GST06-3M □□□090C31	224
	70	1.2	85	1.1			292	39.160	GST06-2M □□□090C31	218
	70	2.2	85	2.1			288	39.200	GST07-3M □□□090C31	224
	70	2.3	85	2.1			292	39.160	GST07-2M □□□090C31	218
	70	3.1	85	2.9			292	39.160	GST09-2M □□□090C31	218
	62	1.0	76	1.0			324	44.000	GST06-3M □□□090C31	224
	62	2.2	76	2.1			324	44.000	GST07-3M □□□090C31	224
	61	1.0	75	0.9			332	44.500	GST06-2M □□□090C31	218
	61	2.1	75	2.1			332	44.500	GST07-2M □□□090C31	218
	55	1.6	67	1.6			370	49.500	GST07-2M □□□090C31	218
	55	2.6	67	2.5			370	49.500	GST09-2M □□□090C31	218
	54	0.9	65	0.8			375	51.022	GST06-3M □□□090C31	224
	54	1.9	65	1.8			375	51.022	GST07-3M □□□090C31	224
	51	0.9	62	0.9			396	53.900	GST06-3M □□□090C31	224
	51	1.8	62	1.7			396	53.900	GST07-3M □□□090C31	224
	49	1.6	59	1.6			420	56.250	GST07-2M □□□090C31	218

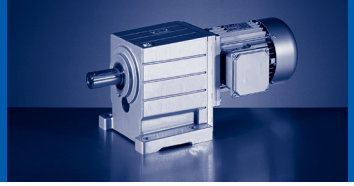

50 Hz: P_N=2.2 kW
60 Hz: P_N=2.6 kW

n_N	2730 r/min		3330 r/min				M_2 [Nm]	i		
f_N	50 Hz		60 Hz							
P_N	2.2 kW		2.6 kW							
	n_2 [r/min]	c	n_2 [r/min]	c						
	49	2.6	59	2.5			420	56.250	GST09-2M □□□090C31	218
	42	1.5	51	1.4			479	65.079	GST07-3M □□□090C31	224
	39	1.4	48	1.3			516	70.156	GST07-3M □□□090C31	224
	38	2.8	46	2.7			529	71.867	GST09-3M □□□090C31	224
	34	1.2	42	1.2			587	79.762	GST07-3M □□□090C31	224
	33	2.6	41	2.6			601	81.667	GST09-3M □□□090C31	224
	32	1.1	39	1.1			632	85.983	GST07-3M □□□090C31	224
	29	2.3	36	2.3			688	93.541	GST09-3M □□□090C31	224
	28	1.0	34	1.0			719	97.708	GST07-3M □□□090C31	224
	28	2.2	34	2.1			729	99.167	GST09-3M □□□090C31	224
	24	0.9	30	0.8			823	111.915	GST07-3M □□□090C31	224
	24	1.9	29	1.9			835	113.585	GST09-3M □□□090C31	224
	21	1.7	26	1.6			949	129.074	GST09-3M □□□090C31	224
	21	3.0	26	2.9			949	129.074	GST11-3M □□□090C31	224
	19	1.6	24	1.5			1039	141.289	GST09-3M □□□090C31	224
	19	2.5	23	2.4			1081	146.993	GST11-3M □□□090C31	224
	17	1.4	21	1.3			1181	160.556	GST09-3M □□□090C31	224
	17	2.4	21	2.3			1163	158.194	GST11-3M □□□090C31	224
	15	1.2	18	1.2			1345	182.844	GST09-3M □□□090C31	224
	15	2.0	19	2.0			1325	180.156	GST11-3M □□□090C31	224
	13	1.1	16	1.0			1528	207.778	GST09-3M □□□090C31	224
	13	1.8	16	1.8			1528	207.778	GST11-3M □□□090C31	224
	12	0.9	14	0.9			1740	236.622	GST09-3M □□□090C31	224
	12	1.6	14	1.5			1740	236.622	GST11-3M □□□090C31	224
	11	0.9	13	0.9			1855	252.167	GST09-3M □□□090C31	224
	11	1.5	13	1.5			1855	252.167	GST11-3M □□□090C31	224
	11	3.2	13	3.1			1827	248.458	GST14-3M □□□090C31	224
	10	0.8					1978	268.889	GST09-3M □□□090C31	224
	10	1.4	12	1.4			1978	268.889	GST11-3M □□□090C31	224
	10	3.0	12	2.9			1978	268.889	GST14-3M □□□090C31	224
	8.4	1.2	10	1.2			2400	326.333	GST11-3M □□□090C31	224
	8.4	2.5	10	2.4			2400	326.333	GST14-3M □□□090C31	224
	7.5	1.0	9.2	1.0			2670	363.000	GST11-3M □□□090C31	224
	7.5	2.2	9.2	2.1			2670	363.000	GST14-3M □□□090C31	224
	6.6	0.9	8.1	0.9			3034	412.500	GST11-3M □□□090C31	224
	6.6	2.0	8.1	1.9			3034	412.500	GST14-3M □□□090C31	224

50 Hz: P_N=2.2 kW
60 Hz: P_N=2.6 kW
87 Hz: P_N=3.9 kW

n_N	1440 r/min		1740 r/min		2550 r/min		M_2 [Nm]	i		
f_N	50 Hz		60 Hz		87 Hz					
P_N	2.2 kW		2.6 kW		3.9 kW					
	n_2 [r/min]	c	n_2 [r/min]	c	n_2 [r/min]	c				
	900	1.9	1088	1.9	1594	1.6	23	1.600	GST05-1M □□□100C12	212
	900	2.7	1088	2.5	1594	2.2	23	1.600	GST06-1M □□□100C12	212
	703	1.8	850	1.7	1245	1.5	29	2.048	GST05-1M □□□100C12	212
	703	2.5	850	2.3	1245	2.1	29	2.048	GST06-1M □□□100C12	212
	643	1.7	777	1.6	1138	1.4	32	2.240	GST05-1M □□□100C12	212
	643	2.4	777	2.3	1138	2.0	32	2.240	GST06-1M □□□100C12	212
	504	1.3	609	1.2	893	1.1	41	2.857	GST05-1M □□□100C12	212
	504	2.3	609	2.1	893	1.9	41	2.857	GST06-1M □□□100C12	212
	487	1.5	589	1.4	863	1.3	42	2.956	GST05-2M □□□100C12	218
	432	1.7	522	1.6	765	1.4	47	3.333	GST05-2M □□□100C12	218
	411	1.1	497	1.0	729	0.9	50	3.500	GST05-1M □□□100C12	212
	411	2.1	497	2.0	729	1.7	50	3.500	GST06-1M □□□100C12	212
	355	1.4	429	1.4	629	1.2	57	4.053	GST05-2M □□□100C12	218
	346	3.3	418	3.1	613	2.7	59	4.160	GST06-2M □□□100C12	218
	316	1.6	382	1.5	560	1.3	66	4.556	GST06-1M □□□100C12	212
	316	2.8	382	2.7	560	2.4	66	4.556	GST07-1M □□□100C12	212
	315	1.4	381	1.3	558	1.2	65	4.571	GST05-2M □□□100C12	218
	315	3.1	381	2.9	558	2.6	65	4.571	GST06-2M □□□100C12	218
	278	1.2	335	1.2	492	1.0	73	5.187	GST05-2M □□□100C12	218
	271	2.8	327	2.6	479	2.3	75	5.324	GST06-2M □□□100C12	218
	258	2.4	312	2.3	457	2.1	80	5.583	GST07-1M □□□100C12	212
	254	1.3	307	1.2	450	1.1	81	5.667	GST06-1M □□□100C12	212
	246	1.2	297	1.2	436	1.0	83	5.850	GST05-2M □□□100C12	218
	246	2.7	297	2.6	436	2.2	83	5.850	GST06-2M □□□100C12	218
	225	1.2	272	1.1	398	1.0	91	6.400	GST05-2M □□□100C12	218
	225	2.5	272	2.4	398	2.1	91	6.400	GST06-2M □□□100C12	218
	205	2.4	247	2.3	362	2.0	100	7.040	GST06-2M □□□100C12	218
	199	1.1	240	1.0	352	0.9	103	7.238	GST05-2M □□□100C12	218
	196	1.9	237	1.8	348	1.6	105	7.333	GST07-1M □□□100C12	212
	196	2.8	237	2.6	348	2.3	105	7.333	GST09-1M □□□100C12	212
	176	1.0	213	1.0	312	0.8	116	8.163	GST05-2M □□□100C12	218
	176	2.2	213	2.1	312	1.8	116	8.163	GST06-2M □□□100C12	218
	162	1.4	196	1.4	287	1.2	128	8.900	GST07-1M □□□100C12	212
	162	2.3	196	2.2	287	1.9	128	8.900	GST09-1M □□□100C12	212
	160	0.9	193	0.9			128	9.010	GST05-2M □□□100C12	218
	160	2.1	193	2.0	283	1.7	128	9.010	GST06-2M □□□100C12	218
	144	0.9	174	0.8			142	10.000	GST05-2M □□□100C12	218
	144	1.9	174	1.8	255	1.6	142	10.000	GST06-2M □□□100C12	218
	129	0.8					159	11.200	GST05-2M □□□100C12	218
	129	1.8	155	1.7	228	1.5	159	11.200	GST06-2M □□□100C12	218
	128	1.8	155	1.7	227	1.5	162	11.250	GST09-1M □□□100C12	212

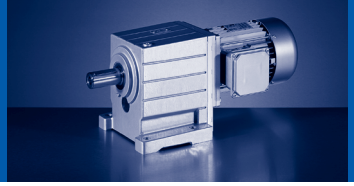

50 Hz: P_N=2.2 kW
60 Hz: P_N=2.6 kW
87 Hz: P_N=3.9 kW

n_N	1440 r/min		1740 r/min		2550 r/min		M_2 [Nm]	i		
f_N	50 Hz		60 Hz		87 Hz					
P_N	2.2 kW		2.6 kW		3.9 kW					
	n_2 [r/min]	c	n_2 [r/min]	c	n_2 [r/min]	c				
	115	1.7	138	1.6	203	1.4	178	12.571	GST06-2M □□□100C12	218
	101	1.5	122	1.4	179	1.3	202	14.286	GST06-2M □□□100C12	218
	101	3.2	122	3.0	179	2.7	202	14.286	GST07-2M □□□100C12	218
	94	1.5	113	1.5	166	1.4	218	15.400	GST06-2M □□□100C12	218
	94	3.0	113	3.0	166	2.8	218	15.400	GST07-2M □□□100C12	218
	82	1.3	99	1.3	146	1.2	248	17.500	GST06-2M □□□100C12	218
	82	2.7	99	2.7	146	2.6	248	17.500	GST07-2M □□□100C12	218
	72	1.2	87	1.2	127	1.2	284	20.044	GST06-2M □□□100C12	218
	72	2.5	87	2.5	127	2.3	284	20.044	GST07-2M □□□100C12	218
	63	1.0	76	1.0	112	0.9	322	22.778	GST06-2M □□□100C12	218
	63	2.1	76	2.1	112	2.0	322	22.778	GST07-2M □□□100C12	218
	59	2.0	71	2.0	104	1.9	348	24.567	GST07-2M □□□100C12	218
	58	1.0	70	1.0	102	1.0	353	24.933	GST06-2M □□□100C12	218
	52	1.8	62	1.8	91	1.7	395	27.917	GST07-2M □□□100C12	218
	45	1.6	54	1.6	79	1.5	457	32.267	GST07-2M □□□100C12	218
	45	2.8	54	2.8	79	2.6	457	32.267	GST09-2M □□□100C12	218
	39	1.4	48	1.4	70	1.3	519	36.667	GST07-2M □□□100C12	218
	39	2.8	48	2.8	70	2.6	519	36.667	GST09-2M □□□100C12	218
	37	1.3	44	1.3	65	1.2	547	39.200	GST07-3M □□□100C12	224
	37	1.3	44	1.3	65	1.2	554	39.160	GST07-2M □□□100C12	218
	37	2.3	44	2.3	65	2.2	554	39.160	GST09-2M □□□100C12	218
	37	2.9	44	2.9	65	2.7	554	39.160	GST11-2M □□□100C12	218
	36	2.4	43	2.4	64	2.3	560	40.136	GST09-3M □□□100C12	224
	33	1.2	40	1.2	58	1.2	614	44.000	GST07-3M □□□100C12	224
	33	2.1	40	2.1	59	2.1	603	43.267	GST09-3M □□□100C12	224
	32	1.1	39	1.1	57	1.1	630	44.500	GST07-2M □□□100C12	218
	32	2.3	39	2.3	57	2.3	630	44.500	GST09-2M □□□100C12	218
	32	2.9	39	2.9	57	2.9	630	44.500	GST11-2M □□□100C12	218
	29	1.8	35	1.8	52	1.8	701	49.500	GST09-2M □□□100C12	218
	29	2.1	35	2.1	52	2.1	686	49.167	GST09-3M □□□100C12	224
	29	2.3	35	2.3	52	2.3	701	49.500	GST11-2M □□□100C12	218
	28	1.0	34	1.0	50	1.0	711	51.022	GST07-3M □□□100C12	224
	27	0.9	32	0.9	47	0.9	752	53.900	GST07-3M □□□100C12	224
	27	1.9	33	1.9	48	1.9	740	53.044	GST09-3M □□□100C12	224
	26	1.8	31	1.8	45	1.8	796	56.250	GST09-2M □□□100C12	218
	26	2.3	31	2.3	45	2.3	796	56.250	GST11-2M □□□100C12	218
	25	3.2	30	3.2	44	3.2	808	57.968	GST11-3M □□□100C12	224
	24	1.9	29	1.9	42	1.9	840	60.278	GST09-3M □□□100C12	224
	24	3.2	28	3.2	42	3.2	854	61.250	GST11-3M □□□100C12	224
	20	1.5	24	1.5	36	1.5	1002	71.867	GST09-3M □□□100C12	224
	20	2.7	25	2.7	36	2.7	990	71.011	GST11-3M □□□100C12	224

50 Hz: P_N=2.2 kW
60 Hz: P_N=2.6 kW
87 Hz: P_N=3.9 kW

n_N	1440 r/min		1740 r/min		2550 r/min		M_2 [Nm]	i		
f_N	50 Hz		60 Hz		87 Hz					
P_N	2.2 kW		2.6 kW		3.9 kW					
	n_2 [r/min]	c	n_2 [r/min]	c	n_2 [r/min]	c				
	18	1.4	21	1.4	31	1.4	1139	81.667	GST09-3M □□□100C12	224
	18	2.5	22	2.5	32	2.5	1125	80.694	GST11-3M □□□100C12	224
	17	2.2	20	2.2	29	2.2	1217	87.267	GST11-3M □□□100C12	224
	15	1.2	19	1.2	27	1.2	1304	93.541	GST09-3M □□□100C12	224
	15	1.2	18	1.2	26	1.2	1383	99.167	GST09-3M □□□100C12	224
	15	2.0	18	2.0	26	2.0	1383	99.167	GST11-3M □□□100C12	224
	13	1.0	15	1.0	23	1.0	1584	113.585	GST09-3M □□□100C12	224
	13	1.7	15	1.7	23	1.7	1575	112.933	GST11-3M □□□100C12	224
	11	0.9	14	0.9	20	0.9	1800	129.074	GST09-3M □□□100C12	224
	11	1.6	14	1.6	20	1.6	1800	129.074	GST11-3M □□□100C12	224
	10	0.8	12	0.8	18	0.8	1970	141.289	GST09-3M □□□100C12	224
	10	3.0	13	3.0	18	3.0	1941	139.211	GST14-3M □□□100C12	224
	9.8	1.3	12	1.3	17	1.3	2049	146.993	GST11-3M □□□100C12	224
	9.1	1.3	11	1.3	16	1.3	2206	158.194	GST11-3M □□□100C12	224
	9.1	2.7	11	2.7	16	2.7	2206	158.194	GST14-3M □□□100C12	224
	8.4	2.5	10	2.5	15	2.5	2386	171.111	GST14-3M □□□100C12	224
	8	1.1	9.7	1.1	14	1.1	2512	180.156	GST11-3M □□□100C12	224
	7	2.1	8.5	2.1	13	2.1	2854	204.722	GST14-3M □□□100C12	224
	6.9	1.0	8.4	1.0	12	1.0	2897	207.778	GST11-3M □□□100C12	224
	6.1	0.8	7.4	0.8	11	0.8	3299	236.622	GST11-3M □□□100C12	224
	6.1	1.8	7.4	1.8	11	1.8	3299	236.622	GST14-3M □□□100C12	224
	5.8	1.7	7	1.7	10	1.7	3464	248.458	GST14-3M □□□100C12	224
	5.4	1.6	6.5	1.6	9.5	1.6	3749	268.889	GST14-3M □□□100C12	224
	4.4	1.3	5.3	1.3	7.8	1.3	4550	326.333	GST14-3M □□□100C12	224
	4	1.1	4.8	1.1	7	1.1	5061	363.000	GST14-3M □□□100C12	224
	3.5	1.0	4.2	1.0	6.2	1.0	5751	412.500	GST14-3M □□□100C12	224

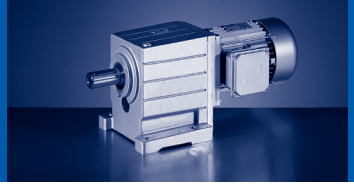

50 Hz: P_N=3.0 kW
60 Hz: P_N=3.6 kW

n_N	2890 r/min		3490 r/min				M_2 [Nm]	i		
f_N	50 Hz		60 Hz							
P_N	3.0 kW		3.6 kW							
	n_2 [r/min]	c	n_2 [r/min]	c						
	1806	2.3	2181	2.2			16	1.600	GST05-1M □□□100C31	212
	1806	3.2	2181	3.0			16	1.600	GST06-1M □□□100C31	212
	1411	2.1	1704	2.0			20	2.048	GST05-1M □□□100C31	212
	1411	2.9	1704	2.7			20	2.048	GST06-1M □□□100C31	212
	1290	2.0	1558	1.8			22	2.240	GST05-1M □□□100C31	212
	1290	2.9	1558	2.7			22	2.240	GST06-1M □□□100C31	212
	1012	1.5	1222	1.4			28	2.857	GST05-1M □□□100C31	212
	1012	2.7	1222	2.5			28	2.857	GST06-1M □□□100C31	212
	978	1.8	1181	1.7			28	2.956	GST05-2M □□□100C31	218
	867	2.0	1047	1.8			32	3.333	GST05-2M □□□100C31	218
	826	1.3	997	1.2			34	3.500	GST05-1M □□□100C31	212
	826	2.5	997	2.3			34	3.500	GST06-1M □□□100C31	212
	713	1.7	861	1.6			39	4.053	GST05-2M □□□100C31	218
	634	1.9	766	1.8			45	4.556	GST06-1M □□□100C31	212
	632	1.7	763	1.6			44	4.571	GST05-2M □□□100C31	218
	557	1.5	673	1.4			50	5.187	GST05-2M □□□100C31	218
	543	3.3	656	3.1			51	5.324	GST06-2M □□□100C31	218
	518	2.9	625	2.7			55	5.583	GST07-1M □□□100C31	212
	510	1.5	616	1.4			55	5.667	GST06-1M □□□100C31	212
	494	1.5	597	1.4			56	5.850	GST05-2M □□□100C31	218
	494	3.2	597	3.0			56	5.850	GST06-2M □□□100C31	218
	452	1.4	545	1.3			62	6.400	GST05-2M □□□100C31	218
	452	3.0	545	2.8			62	6.400	GST06-2M □□□100C31	218
	411	2.8	496	2.6			68	7.040	GST06-2M □□□100C31	218
	399	1.3	482	1.2			70	7.238	GST05-2M □□□100C31	218
	394	2.2	476	2.1			72	7.333	GST07-1M □□□100C31	212
	354	1.2	428	1.1			79	8.163	GST05-2M □□□100C31	218
	354	2.6	428	2.4			79	8.163	GST06-2M □□□100C31	218
	325	1.7	392	1.6			87	8.900	GST07-1M □□□100C31	212
	325	2.7	392	2.6			87	8.900	GST09-1M □□□100C31	212
	321	1.1	387	1.0			87	9.010	GST05-2M □□□100C31	218
	321	2.4	387	2.3			87	9.010	GST06-2M □□□100C31	218
	289	1.0	349	1.0			96	10.000	GST05-2M □□□100C31	218
	289	2.3	349	2.1			96	10.000	GST06-2M □□□100C31	218
	258	1.0	312	0.9			108	11.200	GST05-2M □□□100C31	218
	258	2.1	312	2.0			108	11.200	GST06-2M □□□100C31	218
	257	2.2	310	2.0			110	11.250	GST09-1M □□□100C31	212
	230	2.0	278	1.8			121	12.571	GST06-2M □□□100C31	218
	202	1.8	244	1.7			137	14.286	GST06-2M □□□100C31	218
	188	2.0	227	1.8			148	15.400	GST06-2M □□□100C31	218
	165	1.7	199	1.6			168	17.500	GST06-2M □□□100C31	218

50 Hz: P_N=3.0 kW
60 Hz: P_N=3.6 kW

n_N	2890 r/min		3490 r/min				M_2 [Nm]	i		
f_N	50 Hz		60 Hz							
P_N	3.0 kW		3.6 kW							
	n_2 [r/min]	c	n_2 [r/min]	c						
	144	1.7	174	1.6			193	20.044	GST06-2M □□□100C31	218
	127	1.3	153	1.2			219	22.778	GST06-2M □□□100C31	218
	127	2.8	153	2.7			219	22.778	GST07-2M □□□100C31	218
	118	2.7	142	2.6			236	24.567	GST07-2M □□□100C31	218
	116	1.4	140	1.3			240	24.933	GST06-2M □□□100C31	218
	104	2.4	125	2.2			269	27.917	GST07-2M □□□100C31	218
	102	1.1	123	1.0			273	28.333	GST06-2M □□□100C31	218
	90	2.1	108	2.0			310	32.267	GST07-2M □□□100C31	218
	79	1.8	95	1.7			353	36.667	GST07-2M □□□100C31	218
	74	1.7	89	1.6			377	39.160	GST07-2M □□□100C31	218
	74	1.7	89	1.6			371	39.200	GST07-3M □□□100C31	224
	74	3.1	89	2.9			377	39.160	GST09-2M □□□100C31	218
	72	3.2	87	3.0			380	40.136	GST09-3M □□□100C31	224
	67	3.2	81	3.0			410	43.267	GST09-3M □□□100C31	224
	66	1.7	79	1.6			417	44.000	GST07-3M □□□100C31	224
	65	1.7	78	1.6			428	44.500	GST07-2M □□□100C31	218
	59	3.2	71	3.0			466	49.167	GST09-3M □□□100C31	224
	58	2.7	71	2.6			476	49.500	GST09-2M □□□100C31	218
	57	1.5	68	1.4			483	51.022	GST07-3M □□□100C31	224
	55	2.7	66	2.6			503	53.044	GST09-3M □□□100C31	224
	54	1.4	65	1.3			511	53.900	GST07-3M □□□100C31	224
	51	2.7	62	2.6			541	56.250	GST09-2M □□□100C31	218
	48	2.7	58	2.6			571	60.278	GST09-3M □□□100C31	224
	41	1.1	50	1.0			665	70.156	GST07-3M □□□100C31	224
	40	2.2	49	2.1			681	71.867	GST09-3M □□□100C31	224
	36	0.9	44	0.9			756	79.762	GST07-3M □□□100C31	224
	35	2.1	43	2.0			774	81.667	GST09-3M □□□100C31	224
	34	0.9	41	0.8			815	85.983	GST07-3M □□□100C31	224
	33	3.2	40	3.1			827	87.267	GST11-3M □□□100C31	224
	31	1.8	37	1.7			886	93.541	GST09-3M □□□100C31	224
	29	1.7	35	1.6			939	99.167	GST09-3M □□□100C31	224
	29	3.0	35	2.8			939	99.167	GST11-3M □□□100C31	224
	26	2.5	31	2.4			1070	112.933	GST11-3M □□□100C31	224
	25	1.5	31	1.4			1076	113.585	GST09-3M □□□100C31	224
	22	1.3	27	1.3			1223	129.074	GST09-3M □□□100C31	224
	22	2.3	27	2.2			1223	129.074	GST11-3M □□□100C31	224
	21	1.2	25	1.2			1339	141.289	GST09-3M □□□100C31	224
	20	1.9	24	1.8			1393	146.993	GST11-3M □□□100C31	224
	18	1.1	22	1.0			1521	160.556	GST09-3M □□□100C31	224
	18	1.9	22	1.8			1499	158.194	GST11-3M □□□100C31	224
	16	1.6	19	1.5			1707	180.156	GST11-3M □□□100C31	224

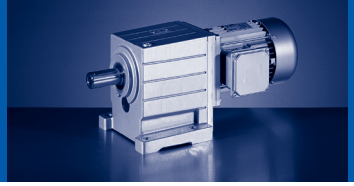

50 Hz: P_N=3.0 kW
60 Hz: P_N=3.6 kW

n_N	2890 r/min		3490 r/min				M_2 [Nm]	i		
f_N	50 Hz		60 Hz							
P_N	3.0 kW		3.6 kW							
	n_2 [r/min]	c	n_2 [r/min]	c						
	14	1.4	17	1.4			1968	207.778	GST11-3M □□□100C31	224
	14	3.1	17	2.9			1939	204.722	GST14-3M □□□100C31	224
	12	1.2	15	1.1			2242	236.622	GST11-3M □□□100C31	224
	12	1.2	14	1.1			2389	252.167	GST11-3M □□□100C31	224
	12	2.5	14	2.4			2354	248.458	GST14-3M □□□100C31	224
	12	2.6	15	2.5			2242	236.622	GST14-3M □□□100C31	224
	11	1.1	13	1.1			2547	268.889	GST11-3M □□□100C31	224
	11	2.3	13	2.2			2547	268.889	GST14-3M □□□100C31	224
	8.9	0.9	11	0.9			3092	326.333	GST11-3M □□□100C31	224
	8.9	1.9	11	1.8			3092	326.333	GST14-3M □□□100C31	224
	8	1.7	9.6	1.6			3439	363.000	GST14-3M □□□100C31	224
	7	1.5	8.5	1.4			3908	412.500	GST14-3M □□□100C31	224

50 Hz: P_N=3.0 kW
60 Hz: P_N=3.6 kW
87 Hz: P_N=5.4 kW

n_N	1430 r/min		1730 r/min		2540 r/min		M_2 [Nm]	i		
f_N	50 Hz		60 Hz		87 Hz					
P_N	3.0 kW		3.6 kW		5.4 kW					
	n_2 [r/min]	c	n_2 [r/min]	c	n_2 [r/min]	c				
	894	1.4	1081	1.4	1588	1.2	32	1.600	GST05-1M □□□100C32	212
	894	1.9	1081	1.9	1588	1.6	32	1.600	GST06-1M □□□100C32	212
	715	3.1	865	3.0	1270	2.6	40	2.000	GST07-1M □□□100C32	212
	698	1.3	845	1.2	1241	1.1	40	2.048	GST05-1M □□□100C32	212
	698	1.8	845	1.7	1241	1.5	40	2.048	GST06-1M □□□100C32	212
	638	1.2	772	1.1	1134	1.0	44	2.240	GST05-1M □□□100C32	212
	638	1.8	772	1.7	1134	1.5	44	2.240	GST06-1M □□□100C32	212
	638	3.0	772	2.9	1134	2.6	44	2.240	GST07-1M □□□100C32	212
	501	0.9	606	0.9			56	2.857	GST05-1M □□□100C32	212
	501	1.6	606	1.6	889	1.4	56	2.857	GST06-1M □□□100C32	212
	501	2.8	606	2.7	889	2.4	56	2.857	GST07-1M □□□100C32	212
	484	1.1	585	1.1	859	0.9	57	2.956	GST05-2M □□□100C32	218
	471	2.8	570	2.7	837	2.4	59	3.033	GST06-2M □□□100C32	218
	429	1.2	519	1.2	762	1.0	65	3.333	GST05-2M □□□100C32	218
	429	2.7	519	2.6	762	2.3	65	3.333	GST06-2M □□□100C32	218
	409	1.5	494	1.5	726	1.3	69	3.500	GST06-1M □□□100C32	212
	409	2.5	494	2.4	726	2.1	69	3.500	GST07-1M □□□100C32	212
	353	1.0	427	1.0	627	0.9	79	4.053	GST05-2M □□□100C32	218
	344	2.4	416	2.3	611	2.0	81	4.160	GST06-2M □□□100C32	218
	314	1.2	380	1.1	558	1.0	90	4.556	GST06-1M □□□100C32	212
	314	2.1	380	2.0	558	1.7	90	4.556	GST07-1M □□□100C32	212
	313	1.0	378	1.0	556	0.9	89	4.571	GST05-2M □□□100C32	218
	313	2.3	378	2.1	556	1.9	89	4.571	GST06-2M □□□100C32	218
	306	3.0	371	2.8	544	2.5	92	4.667	GST09-1M □□□100C32	212
	276	0.9	334	0.9			101	5.187	GST05-2M □□□100C32	218
	269	2.0	325	1.9	477	1.7	104	5.324	GST06-2M □□□100C32	218
	256	1.8	310	1.7	455	1.5	110	5.583	GST07-1M □□□100C32	212
	252	0.9	305	0.9			112	5.667	GST06-1M □□□100C32	212
	252	2.5	305	2.4	448	2.1	112	5.667	GST09-1M □□□100C32	212
	244	0.9	296	0.9			114	5.850	GST05-2M □□□100C32	218
	244	2.0	296	1.9	434	1.6	114	5.850	GST06-2M □□□100C32	218
	223	0.8	270	0.8			124	6.400	GST05-2M □□□100C32	218
	223	1.8	270	1.8	397	1.6	124	6.400	GST06-2M □□□100C32	218
	203	1.7	246	1.7	361	1.5	137	7.040	GST06-2M □□□100C32	218
	195	1.4	236	1.3	346	1.1	145	7.333	GST07-1M □□□100C32	212
	195	2.0	236	1.9	346	1.7	145	7.333	GST09-1M □□□100C32	212
	175	1.6	212	1.5	311	1.3	159	8.163	GST06-2M □□□100C32	218
	163	3.1	197	2.9	289	2.6	171	8.800	GST07-2M □□□100C32	218
	161	1.0	194	1.0	285	0.9	176	8.900	GST07-1M □□□100C32	212
	161	1.7	194	1.6	285	1.4	176	8.900	GST09-1M □□□100C32	212
	159	1.5	192	1.4	282	1.3	175	9.010	GST06-2M □□□100C32	218

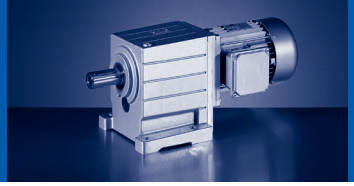

50 Hz: P_N=3.0 kW
60 Hz: P_N=3.6 kW
87 Hz: P_N=5.4 kW

n_N	1430 r/min		1730 r/min		2540 r/min		M_2 [Nm]	i		
f_N	50 Hz		60 Hz		87 Hz					
P_N	3.0 kW		3.6 kW		5.4 kW					
	n_2 [r/min]	c	n_2 [r/min]	c	n_2 [r/min]	c				
	145	2.9	176	2.7	258	2.4	192	9.856	GST07-2M □□□100C32	218
	143	1.4	173	1.3	254	1.2	194	10.000	GST06-2M □□□100C32	218
	128	1.3	155	1.2	227	1.1	218	11.200	GST06-2M □□□100C32	218
	128	2.8	155	2.6	227	2.3	218	11.200	GST07-2M □□□100C32	218
	127	1.3	154	1.3	226	1.1	222	11.250	GST09-1M □□□100C32	212
	114	1.2	138	1.2	202	1.0	244	12.571	GST06-2M □□□100C32	218
	114	2.5	138	2.3	202	2.1	244	12.571	GST07-2M □□□100C32	218
	100	1.1	121	1.1	178	0.9	278	14.286	GST06-2M □□□100C32	218
	100	2.3	121	2.2	178	1.9	278	14.286	GST07-2M □□□100C32	218
	93	1.1	112	1.1	165	1.0	299	15.400	GST06-2M □□□100C32	218
	93	2.2	112	2.2	165	2.1	299	15.400	GST07-2M □□□100C32	218
	82	0.9	99	0.9	145	0.9	340	17.500	GST06-2M □□□100C32	218
	82	2.0	99	2.0	145	1.9	340	17.500	GST07-2M □□□100C32	218
	71	0.9	86	0.9	127	0.9	390	20.044	GST06-2M □□□100C32	218
	71	1.8	86	1.8	127	1.7	390	20.044	GST07-2M □□□100C32	218
	70	3.0	84	3.0	124	2.8	399	20.533	GST09-2M □□□100C32	218
	63	1.5	76	1.5	112	1.5	443	22.778	GST07-2M □□□100C32	218
	61	3.0	74	3.0	109	2.8	454	23.333	GST09-2M □□□100C32	218
	58	1.5	70	1.5	103	1.4	478	24.567	GST07-2M □□□100C32	218
	57	2.5	69	2.5	102	2.4	485	24.933	GST09-2M □□□100C32	218
	51	1.3	62	1.3	91	1.2	543	27.917	GST07-2M □□□100C32	218
	51	2.5	61	2.5	90	2.4	551	28.333	GST09-2M □□□100C32	218
	44	1.1	54	1.1	79	1.1	627	32.267	GST07-2M □□□100C32	218
	44	2.0	54	2.0	79	1.9	627	32.267	GST09-2M □□□100C32	218
	44	2.5	54	2.5	79	2.4	627	32.267	GST11-2M □□□100C32	218
	39	1.0	47	1.0	69	0.9	713	36.667	GST07-2M □□□100C32	218
	39	2.0	47	2.0	69	1.9	713	36.667	GST09-2M □□□100C32	218
	39	2.5	47	2.5	69	2.4	713	36.667	GST11-2M □□□100C32	218
	37	0.9	44	0.9	65	0.9	761	39.160	GST07-2M □□□100C32	218
	37	0.9	44	0.9	65	0.9	751	39.200	GST07-3M □□□100C32	224
	37	1.7	44	1.7	65	1.6	761	39.160	GST09-2M □□□100C32	218
	37	2.1	44	2.1	65	2.0	761	39.160	GST11-2M □□□100C32	218
	36	1.8	43	1.8	63	1.7	768	40.136	GST09-3M □□□100C32	224
	33	0.8	39	0.8	58	0.8	842	44.000	GST07-3M □□□100C32	224
	33	1.6	40	1.6	59	1.6	828	43.267	GST09-3M □□□100C32	224
	33	2.9	39	2.9	58	2.9	842	44.000	GST11-3M □□□100C32	224
	32	0.8	39	0.8	57	0.8	865	44.500	GST07-2M □□□100C32	218
	32	1.7	39	1.7	57	1.7	865	44.500	GST09-2M □□□100C32	218
	32	2.1	39	2.1	57	2.1	865	44.500	GST11-2M □□□100C32	218
	29	1.3	35	1.3	51	1.3	962	49.500	GST09-2M □□□100C32	218
	29	1.6	35	1.6	52	1.6	941	49.167	GST09-3M □□□100C32	224

50 Hz: P_N=3.0 kW
60 Hz: P_N=3.6 kW
87 Hz: P_N=5.4 kW

n_N	1430 r/min		1730 r/min		2540 r/min		M_2 [Nm]	i		
f_N	50 Hz		60 Hz		87 Hz					
P_N	3.0 kW		3.6 kW		5.4 kW					
	n_2 [r/min]	c	n_2 [r/min]	c	n_2 [r/min]	c				
	29	1.7	35	1.7	51	1.7	962	49.500	GST11-2M □□□100C32	218
	29	2.9	35	2.9	51	2.9	957	50.000	GST11-3M □□□100C32	224
	27	1.4	33	1.4	48	1.4	1016	53.044	GST09-3M □□□100C32	224
	25	1.3	31	1.3	45	1.3	1093	56.250	GST09-2M □□□100C32	218
	25	1.7	31	1.7	45	1.7	1093	56.250	GST11-2M □□□100C32	218
	25	2.3	30	2.3	44	2.3	1110	57.968	GST11-3M □□□100C32	224
	24	1.4	29	1.4	42	1.4	1154	60.278	GST09-3M □□□100C32	224
	23	2.3	28	2.3	42	2.3	1173	61.250	GST11-3M □□□100C32	224
	20	1.1	24	1.1	35	1.1	1376	71.867	GST09-3M □□□100C32	224
	20	1.9	24	1.9	36	1.9	1360	71.011	GST11-3M □□□100C32	224
	18	1.0	21	1.0	31	1.0	1564	81.667	GST09-3M □□□100C32	224
	18	1.8	21	1.8	32	1.8	1545	80.694	GST11-3M □□□100C32	224
	16	1.6	20	1.6	29	1.6	1671	87.267	GST11-3M □□□100C32	224
	15	0.9	19	0.9	27	0.9	1791	93.541	GST09-3M □□□100C32	224
	15	3.0	19	3.0	27	3.0	1791	93.541	GST14-3M □□□100C32	224
	14	0.8	17	0.8	26	0.8	1899	99.167	GST09-3M □□□100C32	224
	14	1.5	17	1.5	26	1.5	1899	99.167	GST11-3M □□□100C32	224
	14	2.9	16	2.9	24	2.9	2035	106.296	GST14-3M □□□100C32	224
	13	1.3	15	1.3	23	1.3	2162	112.933	GST11-3M □□□100C32	224
	11	1.1	13	1.1	20	1.1	2471	129.074	GST11-3M □□□100C32	224
	11	2.4	13	2.4	20	2.4	2494	130.278	GST14-3M □□□100C32	224
	10	2.2	12	2.2	18	2.2	2665	139.211	GST14-3M □□□100C32	224
	9.7	1.0	12	1.0	17	1.0	2814	146.993	GST11-3M □□□100C32	224
	9	0.9	11	0.9	16	0.9	3029	158.194	GST11-3M □□□100C32	224
	9	2.0	11	2.0	16	2.0	3029	158.194	GST14-3M □□□100C32	224
	8.4	1.8	10	1.8	15	1.8	3276	171.111	GST14-3M □□□100C32	224
	7	1.5	8.5	1.5	12	1.5	3920	204.722	GST14-3M □□□100C32	224
	6	1.3	7.3	1.3	11	1.3	4530	236.622	GST14-3M □□□100C32	224
	5.8	1.2	7	1.2	10	1.2	4757	248.458	GST14-3M □□□100C32	224
	5.3	1.2	6.4	1.2	9.5	1.2	5148	268.889	GST14-3M □□□100C32	224
	4.4	1.0	5.3	1.0	7.8	1.0	6248	326.333	GST14-3M □□□100C32	224
	3.9	0.8	4.8	0.8	7	0.8	6950	363.000	GST14-3M □□□100C32	224

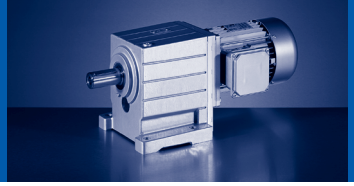

50 Hz: P_N=4.0 kW
60 Hz: P_N=4.8 kW

n_N	2840 r/min		3440 r/min				M_2 [Nm]	i		
f_N	50 Hz		60 Hz							
P_N	4.0 kW		4.8 kW							
	n_2 [r/min]	c	n_2 [r/min]	c						
	1775	1.7	2150	1.6			21	1.600	GST05-1M □□□100C41	212
	1775	2.3	2150	2.2			21	1.600	GST06-1M □□□100C41	212
	1387	1.6	1680	1.5			27	2.048	GST05-1M □□□100C41	212
	1387	2.2	1680	2.0			27	2.048	GST06-1M □□□100C41	212
	1268	1.4	1536	1.4			30	2.240	GST05-1M □□□100C41	212
	1268	2.1	1536	2.0			30	2.240	GST06-1M □□□100C41	212
	994	1.1	1204	1.1			38	2.857	GST05-1M □□□100C41	212
	994	2.0	1204	1.9			38	2.857	GST06-1M □□□100C41	212
	961	1.3	1164	1.2			39	2.956	GST05-2M □□□100C41	218
	852	1.5	1032	1.4			44	3.333	GST05-2M □□□100C41	218
	852	3.2	1032	3.0			44	3.333	GST06-2M □□□100C41	218
	811	0.9	983	0.9			46	3.500	GST05-1M □□□100C41	212
	811	1.8	983	1.7			46	3.500	GST06-1M □□□100C41	212
	811	3.0	983	2.8			46	3.500	GST07-1M □□□100C41	212
	701	1.2	849	1.2			53	4.053	GST05-2M □□□100C41	218
	683	2.9	827	2.7			54	4.160	GST06-2M □□□100C41	218
	623	1.4	755	1.3			60	4.556	GST06-1M □□□100C41	212
	623	2.5	755	2.3			60	4.556	GST07-1M □□□100C41	212
	621	1.2	753	1.2			60	4.571	GST05-2M □□□100C41	218
	621	2.7	753	2.5			60	4.571	GST06-2M □□□100C41	218
	548	1.1	663	1.0			68	5.187	GST05-2M □□□100C41	218
	534	2.4	646	2.3			70	5.324	GST06-2M □□□100C41	218
	509	2.1	616	2.0			74	5.583	GST07-1M □□□100C41	212
	501	1.1	607	1.1			75	5.667	GST06-1M □□□100C41	212
	501	3.0	607	2.8			75	5.667	GST09-1M □□□100C41	212
	485	1.1	588	1.0			76	5.850	GST05-2M □□□100C41	218
	485	2.4	588	2.2			76	5.850	GST06-2M □□□100C41	218
	444	1.0	538	1.0			84	6.400	GST05-2M □□□100C41	218
	444	2.2	538	2.1			84	6.400	GST06-2M □□□100C41	218
	403	2.1	489	2.0			92	7.040	GST06-2M □□□100C41	218
	392	0.9	475	0.9			95	7.238	GST05-2M □□□100C41	218
	387	1.6	469	1.5			97	7.333	GST07-1M □□□100C41	212
	387	2.4	469	2.3			97	7.333	GST09-1M □□□100C41	212
	348	0.9	421	0.8			107	8.163	GST05-2M □□□100C41	218
	348	1.9	421	1.8			107	8.163	GST06-2M □□□100C41	218
	319	1.3	387	1.2			118	8.900	GST07-1M □□□100C41	212
	319	2.0	387	1.9			118	8.900	GST09-1M □□□100C41	212
	315	0.8					118	9.010	GST05-2M □□□100C41	218
	315	1.8	382	1.7			118	9.010	GST06-2M □□□100C41	218
	284	1.7	344	1.6			131	10.000	GST06-2M □□□100C41	218
	254	1.6	307	1.5			146	11.200	GST06-2M □□□100C41	218

50 Hz: P_N=4.0 kW
60 Hz: P_N=4.8 kW

n_N	2840 r/min		3440 r/min				M_2 [Nm]	i		
f_N	50 Hz		60 Hz							
P_N	4.0 kW		4.8 kW							
	n_2 [r/min]	c	n_2 [r/min]	c						
	252	1.6	306	1.5			149	11.250	GST09-1M □□□100C41	212
	226	1.5	274	1.4			164	12.571	GST06-2M □□□100C41	218
	226	3.0	274	2.8			164	12.571	GST07-2M □□□100C41	218
	199	1.3	241	1.3			186	14.286	GST06-2M □□□100C41	218
	199	2.8	241	2.6			186	14.286	GST07-2M □□□100C41	218
	184	1.5	223	1.4			201	15.400	GST06-2M □□□100C41	218
	184	2.9	223	2.8			201	15.400	GST07-2M □□□100C41	218
	162	1.3	197	1.2			228	17.500	GST06-2M □□□100C41	218
	162	2.7	197	2.6			228	17.500	GST07-2M □□□100C41	218
	142	1.2	172	1.2			262	20.044	GST06-2M □□□100C41	218
	142	2.4	172	2.3			262	20.044	GST07-2M □□□100C41	218
	125	1.0	151	0.9			297	22.778	GST06-2M □□□100C41	218
	125	2.1	151	2.0			297	22.778	GST07-2M □□□100C41	218
	116	2.0	140	1.9			321	24.567	GST07-2M □□□100C41	218
	114	1.0	138	1.0			325	24.933	GST06-2M □□□100C41	218
	102	1.7	123	1.6			364	27.917	GST07-2M □□□100C41	218
	88	1.5	107	1.4			421	32.267	GST07-2M □□□100C41	218
	88	2.8	107	2.6			421	32.267	GST09-2M □□□100C41	218
	78	1.4	94	1.3			479	36.667	GST07-2M □□□100C41	218
	78	2.8	94	2.6			479	36.667	GST09-2M □□□100C41	218
	73	1.3	88	1.2			511	39.160	GST07-2M □□□100C41	218
	73	2.3	88	2.2			511	39.160	GST09-2M □□□100C41	218
	73	2.9	88	2.7			511	39.160	GST11-2M □□□100C41	218
	72	1.3	88	1.2			504	39.200	GST07-3M □□□100C41	224
	71	2.4	86	2.2			516	40.136	GST09-3M □□□100C41	224
	66	2.3	80	2.2			556	43.267	GST09-3M □□□100C41	224
	65	1.3	78	1.2			566	44.000	GST07-3M □□□100C41	224
	64	1.2	77	1.2			581	44.500	GST07-2M □□□100C41	218
	64	2.5	77	2.4			581	44.500	GST09-2M □□□100C41	218
	64	3.1	77	3.0			581	44.500	GST11-2M □□□100C41	218
	58	2.3	70	2.2			632	49.167	GST09-3M □□□100C41	224
	57	2.0	70	1.9			646	49.500	GST09-2M □□□100C41	218
	57	2.5	70	2.4			646	49.500	GST11-2M □□□100C41	218
	56	1.1	67	1.0			656	51.022	GST07-3M □□□100C41	224
	54	2.0	65	1.9			682	53.044	GST09-3M □□□100C41	224
	53	1.0	64	1.0			693	53.900	GST07-3M □□□100C41	224
	51	2.0	61	1.9			734	56.250	GST09-2M □□□100C41	218
	51	2.5	61	2.4			734	56.250	GST11-2M □□□100C41	218
	47	2.0	57	1.9			775	60.278	GST09-3M □□□100C41	224
	40	1.6	48	1.5			924	71.867	GST09-3M □□□100C41	224
	40	2.9	48	2.8			913	71.011	GST11-3M □□□100C41	224

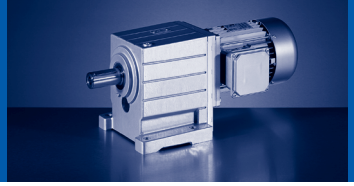

50 Hz: P_N=4.0 kW
60 Hz: P_N=4.8 kW

n_N	2840 r/min		3440 r/min				M_2 [Nm]	i		
f_N	50 Hz		60 Hz							
P_N	4.0 kW		4.8 kW							
	n_2 [r/min]	c	n_2 [r/min]	c						
	35	1.5	42	1.4			1050	81.667	GST09-3M □□□100C41	224
	35	2.7	43	2.6			1037	80.694	GST11-3M □□□100C41	224
	33	2.4	39	2.3			1122	87.267	GST11-3M □□□100C41	224
	30	1.3	37	1.3			1202	93.541	GST09-3M □□□100C41	224
	29	1.3	35	1.2			1275	99.167	GST09-3M □□□100C41	224
	29	2.2	35	2.1			1275	99.167	GST11-3M □□□100C41	224
	25	1.1	30	1.1			1460	113.585	GST09-3M □□□100C41	224
	25	1.9	31	1.8			1452	112.933	GST11-3M □□□100C41	224
	22	1.0	27	0.9			1659	129.074	GST09-3M □□□100C41	224
	22	1.7	27	1.6			1659	129.074	GST11-3M □□□100C41	224
	20	0.9	24	0.9			1816	141.289	GST09-3M □□□100C41	224
	20	3.2	25	3.1			1789	139.211	GST14-3M □□□100C41	224
	19	1.4	23	1.4			1889	146.993	GST11-3M □□□100C41	224
	18	1.4	22	1.3			2033	158.194	GST11-3M □□□100C41	224
	18	2.9	22	2.8			2033	158.194	GST14-3M □□□100C41	224
	17	2.7	20	2.6			2199	171.111	GST14-3M □□□100C41	224
	16	1.2	19	1.1			2316	180.156	GST11-3M □□□100C41	224
	14	1.1	17	1.0			2671	207.778	GST11-3M □□□100C41	224
	14	2.3	17	2.2			2631	204.722	GST14-3M □□□100C41	224
	12	0.9	15	0.9			3041	236.622	GST11-3M □□□100C41	224
	12	1.9	15	1.8			3041	236.622	GST14-3M □□□100C41	224
	11	0.8					3456	268.889	GST11-3M □□□100C41	224
	11	0.9	14	0.8			3241	252.167	GST11-3M □□□100C41	224
	11	1.7	13	1.6			3456	268.889	GST14-3M □□□100C41	224
	11	1.9	14	1.8			3194	248.458	GST14-3M □□□100C41	224
	8.7	1.4	11	1.4			4195	326.333	GST14-3M □□□100C41	224
	7.8	1.2	9.5	1.2			4666	363.000	GST14-3M □□□100C41	224
	6.9	1.1	8.3	1.1			5302	412.500	GST14-3M □□□100C41	224

50 Hz: P_N=4.0 kW
60 Hz: P_N=4.8 kW
87 Hz: P_N=7.1 kW

n_N	1450 r/min		1750 r/min		2560 r/min		M_2 [Nm]	i		
f_N	50 Hz		60 Hz		87 Hz					
P_N	4.0 kW		4.8 kW		7.1 kW					
	n_2 [r/min]	c	n_2 [r/min]	c	n_2 [r/min]	c				
	906	1.5	1094	1.4	1600	1.2	42	1.600	GST06-1M □□□112C22	212
	892	2.5	1077	2.4	1575	2.1	42	1.625	GST07-1M □□□112C22	212
	725	2.4	875	2.3	1280	2.0	52	2.000	GST07-1M □□□112C22	212
	708	1.4	855	1.3	1250	1.1	53	2.048	GST06-1M □□□112C22	212
	647	1.4	781	1.3	1143	1.1	58	2.240	GST06-1M □□□112C22	212
	647	2.3	781	2.2	1143	1.9	58	2.240	GST07-1M □□□112C22	212
	508	1.3	613	1.2	896	1.0	74	2.857	GST06-1M □□□112C22	212
	508	2.1	613	2.0	896	1.8	74	2.857	GST07-1M □□□112C22	212
	478	2.2	577	2.0	844	1.8	78	3.033	GST06-2M □□□112C22	218
	435	2.0	525	1.9	768	1.7	85	3.333	GST06-2M □□□112C22	218
	414	1.2	500	1.1	731	1.0	91	3.500	GST06-1M □□□112C22	212
	414	1.9	500	1.8	731	1.6	91	3.500	GST07-1M □□□112C22	212
	349	1.8	421	1.7	615	1.5	106	4.160	GST06-2M □□□112C22	218
	318	1.6	384	1.5	562	1.3	118	4.556	GST07-1M □□□112C22	212
	317	1.7	383	1.6	560	1.4	117	4.571	GST06-2M □□□112C22	218
	311	2.6	375	2.4	549	2.1	121	4.667	GST09-1M □□□112C22	212
	279	3.2	337	3.1	492	2.7	133	5.200	GST07-2M □□□112C22	218
	272	1.5	329	1.5	481	1.3	136	5.324	GST06-2M □□□112C22	218
	260	1.4	313	1.3	459	1.1	145	5.583	GST07-1M □□□112C22	212
	256	2.2	309	2.1	452	1.8	147	5.667	GST09-1M □□□112C22	212
	254	3.1	306	2.9	448	2.6	146	5.714	GST07-2M □□□112C22	218
	248	1.5	299	1.4	438	1.2	150	5.850	GST06-2M □□□112C22	218
	227	1.4	273	1.3	400	1.2	164	6.400	GST06-2M □□□112C22	218
	227	2.8	273	2.7	400	2.4	164	6.400	GST07-2M □□□112C22	218
	206	1.3	249	1.3	364	1.1	180	7.040	GST06-2M □□□112C22	218
	203	2.7	245	2.5	358	2.2	183	7.150	GST07-2M □□□112C22	218
	198	1.8	239	1.7	349	1.5	190	7.333	GST09-1M □□□112C22	212
	179	2.6	215	2.5	315	2.2	208	8.125	GST07-2M □□□112C22	218
	178	1.2	214	1.2	314	1.0	209	8.163	GST06-2M □□□112C22	218
	165	2.3	199	2.2	291	2.0	225	8.800	GST07-2M □□□112C22	218
	163	1.5	197	1.4	288	1.2	231	8.900	GST09-1M □□□112C22	212
	161	1.1	194	1.1	284	1.0	230	9.010	GST06-2M □□□112C22	218
	147	2.2	178	2.1	260	1.8	252	9.856	GST07-2M □□□112C22	218
	145	1.1	175	1.0	256	0.9	256	10.000	GST06-2M □□□112C22	218
	130	1.0	156	0.9	229	0.8	286	11.200	GST06-2M □□□112C22	218
	130	2.1	156	2.0	229	1.8	286	11.200	GST07-2M □□□112C22	218
	115	0.9	139	0.9			321	12.571	GST06-2M □□□112C22	218
	115	1.9	139	1.8	204	1.6	321	12.571	GST07-2M □□□112C22	218
	102	0.8					365	14.286	GST06-2M □□□112C22	218
	102	1.8	123	1.7	179	1.5	365	14.286	GST07-2M □□□112C22	218
	94	0.8	114	0.8			394	15.400	GST06-2M □□□112C22	218

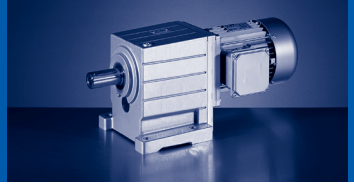

50 Hz: P_N=4.0 kW
60 Hz: P_N=4.8 kW
87 Hz: P_N=7.1 kW

n_N	1450 r/min		1750 r/min		2560 r/min		M_2 [Nm]	i		
f_N	50 Hz		60 Hz		87 Hz					
P_N	4.0 kW		4.8 kW		7.1 kW					
	n_2 [r/min]	c	n_2 [r/min]	c	n_2 [r/min]	c				
	94	1.6	114	1.6	166	1.6	394	15.400	GST07-2M □□□112C22	218
	84	3.1	102	3.1	149	3.0	440	17.222	GST09-2M □□□112C22	218
	83	1.5	100	1.5	146	1.4	447	17.500	GST07-2M □□□112C22	218
	72	1.4	87	1.4	128	1.3	512	20.044	GST07-2M □□□112C22	218
	72	3.2	86	3.2	126	3.1	519	20.289	GST11-2M □□□112C22	218
	71	2.6	85	2.6	125	2.4	525	20.533	GST09-2M □□□112C22	218
	64	1.2	77	1.2	112	1.1	582	22.778	GST07-2M □□□112C22	218
	63	3.2	76	3.2	111	3.1	589	23.056	GST11-2M □□□112C22	218
	62	2.5	75	2.5	110	2.4	596	23.333	GST09-2M □□□112C22	218
	59	1.1	71	1.1	104	1.1	628	24.567	GST07-2M □□□112C22	218
	58	2.2	70	2.2	103	2.1	637	24.933	GST09-2M □□□112C22	218
	58	2.7	70	2.7	103	2.6	637	24.933	GST11-2M □□□112C22	218
	52	1.0	63	1.0	92	0.9	714	27.917	GST07-2M □□□112C22	218
	51	2.1	62	2.1	90	2.0	724	28.333	GST09-2M □□□112C22	218
	51	2.7	62	2.7	90	2.6	724	28.333	GST11-2M □□□112C22	218
	45	1.7	54	1.7	79	1.6	825	32.267	GST09-2M □□□112C22	218
	45	2.2	54	2.2	79	2.1	825	32.267	GST11-2M □□□112C22	218
	45	2.7	54	2.7	79	2.6	825	32.267	GST14-2M □□□112C22	218
	40	1.6	48	1.6	70	1.6	937	36.667	GST09-2M □□□112C22	218
	40	2.2	48	2.2	70	2.1	937	36.667	GST11-2M □□□112C22	218
	40	2.7	48	2.7	70	2.6	937	36.667	GST14-2M □□□112C22	218
	37	1.5	45	1.5	65	1.4	1001	39.160	GST09-2M □□□112C22	218
	37	1.8	45	1.8	65	1.7	1001	39.160	GST11-2M □□□112C22	218
	37	2.3	45	2.3	65	2.2	1001	39.160	GST14-2M □□□112C22	218
	36	1.3	44	1.3	64	1.3	1010	40.136	GST09-3M □□□112C22	224
	36	2.5	43	2.5	63	2.4	1028	40.816	GST11-3M □□□112C22	224
	34	1.2	40	1.2	59	1.2	1089	43.267	GST09-3M □□□112C22	224
	33	1.4	39	1.4	58	1.4	1137	44.500	GST09-2M □□□112C22	218
	33	1.8	39	1.8	58	1.8	1137	44.500	GST11-2M □□□112C22	218
	33	2.2	40	2.2	58	2.2	1108	44.000	GST11-3M □□□112C22	224
	33	2.3	39	2.3	58	2.3	1137	44.500	GST14-2M □□□112C22	218
	30	1.2	36	1.2	52	1.2	1238	49.167	GST09-3M □□□112C22	224
	29	1.5	35	1.5	52	1.5	1265	49.500	GST11-2M □□□112C22	218
	29	1.8	35	1.8	52	1.8	1265	49.500	GST14-2M □□□112C22	218
	29	2.2	35	2.2	51	2.2	1259	50.000	GST11-3M □□□112C22	224
	27	1.0	33	1.0	48	1.0	1335	53.044	GST09-3M □□□112C22	224
	26	1.5	31	1.5	46	1.5	1438	56.250	GST11-2M □□□112C22	218
	26	1.8	31	1.8	46	1.8	1438	56.250	GST14-2M □□□112C22	218
	25	1.8	30	1.8	44	1.8	1459	57.968	GST11-3M □□□112C22	224
	24	1.0	29	1.0	43	1.0	1518	60.278	GST09-3M □□□112C22	224
	24	1.8	29	1.8	42	1.8	1542	61.250	GST11-3M □□□112C22	224

50 Hz: P_N=4.0 kW
60 Hz: P_N=4.8 kW
87 Hz: P_N=7.1 kW

n_N	1450 r/min		1750 r/min		2560 r/min		M_2 [Nm]	i		
f_N	50 Hz		60 Hz		87 Hz					
P_N	4.0 kW		4.8 kW		7.1 kW					
	n_2 [r/min]	c	n_2 [r/min]	c	n_2 [r/min]	c				
	21	2.8	25	2.8	37	2.8	1738	69.042	GST14-3M □□□112C22	224
	20	0.8	24	0.8	36	0.8	1809	71.867	GST09-3M □□□112C22	224
	20	1.5	25	1.5	36	1.5	1788	71.011	GST11-3M □□□112C22	224
	19	2.8	22	2.8	33	2.8	1975	78.457	GST14-3M □□□112C22	224
	18	1.4	22	1.4	32	1.4	2032	80.694	GST11-3M □□□112C22	224
	17	1.2	20	1.2	29	1.2	2197	87.267	GST11-3M □□□112C22	224
	16	2.4	19	2.4	27	2.4	2355	93.541	GST14-3M □□□112C22	224
	15	1.1	18	1.1	26	1.1	2497	99.167	GST11-3M □□□112C22	224
	15	2.4	18	2.4	27	2.4	2421	96.157	GST14-3M □□□112C22	224
	14	2.2	17	2.2	24	2.2	2676	106.296	GST14-3M □□□112C22	224
	13	1.0	16	1.0	23	1.0	2843	112.933	GST11-3M □□□112C22	224
	11	0.9	14	0.9	20	0.9	3250	129.074	GST11-3M □□□112C22	224
	11	1.8	13	1.8	20	1.8	3280	130.278	GST14-3M □□□112C22	224
	10	1.6	13	1.6	18	1.6	3505	139.211	GST14-3M □□□112C22	224
	9.2	1.5	11	1.5	16	1.5	3983	158.194	GST14-3M □□□112C22	224
	8.5	1.4	10	1.4	15	1.4	4308	171.111	GST14-3M □□□112C22	224
	7.1	1.2	8.6	1.2	13	1.2	5154	204.722	GST14-3M □□□112C22	224
	6.1	1.0	7.4	1.0	11	1.0	5957	236.622	GST14-3M □□□112C22	224
	5.8	1.0	7	1.0	10	1.0	6255	248.458	GST14-3M □□□112C22	224
	5.4	0.9	6.5	0.9	9.5	0.9	6769	268.889	GST14-3M □□□112C22	224

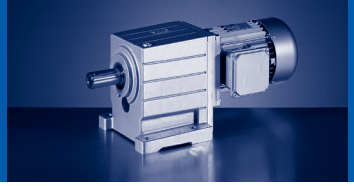

50 Hz: P_N=5.5 kW
60 Hz: P_N=6.6 kW

n_N	2900 r/min		3500 r/min				M_2 [Nm]	i		
f_N	50 Hz		60 Hz							
P_N	5.5 kW		6.6 kW							
	n_2 [r/min]	c	n_2 [r/min]	c						
	1813	1.7	2188	1.6			29	1.600	GST06-1M □□□112C31	212
	1785	2.9	2154	2.8			29	1.625	GST07-1M □□□112C31	212
	1450	2.8	1750	2.6			36	2.000	GST07-1M □□□112C31	212
	1416	1.6	1709	1.5			37	2.048	GST06-1M □□□112C31	212
	1295	1.6	1563	1.5			40	2.240	GST06-1M □□□112C31	212
	1295	2.7	1563	2.5			40	2.240	GST07-1M □□□112C31	212
	1015	1.5	1225	1.4			51	2.857	GST06-1M □□□112C31	212
	1015	2.5	1225	2.4			51	2.857	GST07-1M □□□112C31	212
	956	2.5	1154	2.4			53	3.033	GST06-2M □□□112C31	218
	870	2.4	1050	2.2			59	3.333	GST06-2M □□□112C31	218
	829	1.4	1000	1.3			62	3.500	GST06-1M □□□112C31	212
	829	2.2	1000	2.1			62	3.500	GST07-1M □□□112C31	212
	697	2.1	841	2.0			73	4.160	GST06-2M □□□112C31	218
	637	1.8	768	1.7			81	4.556	GST07-1M □□□112C31	212
	634	2.0	766	1.9			80	4.571	GST06-2M □□□112C31	218
	621	3.0	750	2.8			83	4.667	GST09-1M □□□112C31	212
	545	1.8	657	1.7			94	5.324	GST06-2M □□□112C31	218
	519	1.6	627	1.5			100	5.583	GST07-1M □□□112C31	212
	512	2.6	618	2.4			101	5.667	GST09-1M □□□112C31	212
	496	1.7	598	1.6			103	5.850	GST06-2M □□□112C31	218
	453	1.6	547	1.5			113	6.400	GST06-2M □□□112C31	218
	412	1.5	497	1.4			124	7.040	GST06-2M □□□112C31	218
	406	3.1	490	2.9			126	7.150	GST07-2M □□□112C31	218
	396	2.0	477	1.9			131	7.333	GST09-1M □□□112C31	212
	357	3.0	431	2.9			143	8.125	GST07-2M □□□112C31	218
	355	1.4	429	1.3			143	8.163	GST06-2M □□□112C31	218
	330	2.7	398	2.6			155	8.800	GST07-2M □□□112C31	218
	326	1.7	393	1.6			159	8.900	GST09-1M □□□112C31	212
	322	1.3	389	1.2			158	9.010	GST06-2M □□□112C31	218
	294	2.6	355	2.4			173	9.856	GST07-2M □□□112C31	218
	290	1.2	350	1.2			176	10.000	GST06-2M □□□112C31	218
	259	1.1	313	1.1			197	11.200	GST06-2M □□□112C31	218
	259	2.4	313	2.3			197	11.200	GST07-2M □□□112C31	218
	231	1.1	278	1.0			221	12.571	GST06-2M □□□112C31	218
	231	2.2	278	2.1			221	12.571	GST07-2M □□□112C31	218
	203	1.0	245	0.9			251	14.286	GST06-2M □□□112C31	218
	203	2.1	245	1.9			251	14.286	GST07-2M □□□112C31	218
	188	1.1	227	1.0			271	15.400	GST06-2M □□□112C31	218
	188	2.2	227	2.0			271	15.400	GST07-2M □□□112C31	218
	166	0.9	200	0.9			308	17.500	GST06-2M □□□112C31	218
	166	2.0	200	1.9			308	17.500	GST07-2M □□□112C31	218

50 Hz: P_N=5.5 kW
60 Hz: P_N=6.6 kW

n_N	2900 r/min		3500 r/min				M_2 [Nm]	i		
f_N	50 Hz		60 Hz							
P_N	5.5 kW		6.6 kW							
	n_2 [r/min]	c	n_2 [r/min]	c						
	145	1.8	175	1.7			352	20.044	GST07-2M □□□112C31	218
	127	1.6	154	1.5			400	22.778	GST07-2M □□□112C31	218
	118	1.5	143	1.4			432	24.567	GST07-2M □□□112C31	218
	116	2.9	140	2.7			438	24.933	GST09-2M □□□112C31	218
	104	1.3	125	1.2			491	27.917	GST07-2M □□□112C31	218
	102	2.8	124	2.6			498	28.333	GST09-2M □□□112C31	218
	90	2.3	109	2.2			567	32.267	GST09-2M □□□112C31	218
	90	2.9	109	2.7			567	32.267	GST11-2M □□□112C31	218
	79	2.2	96	2.0			644	36.667	GST09-2M □□□112C31	218
	79	2.9	96	2.7			644	36.667	GST11-2M □□□112C31	218
	74	1.9	89	1.8			688	39.160	GST09-2M □□□112C31	218
	74	2.4	89	2.3			688	39.160	GST11-2M □□□112C31	218
	74	3.0	89	2.8			688	39.160	GST14-2M □□□112C31	218
	72	1.8	87	1.7			695	40.136	GST09-3M □□□112C31	224
	67	1.7	81	1.6			749	43.267	GST09-3M □□□112C31	224
	66	3.2	80	3.0			762	44.000	GST11-3M □□□112C31	224
	65	2.0	79	1.9			782	44.500	GST09-2M □□□112C31	218
	65	2.7	79	2.5			782	44.500	GST11-2M □□□112C31	218
	59	1.7	71	1.6			851	49.167	GST09-3M □□□112C31	224
	59	2.1	71	2.0			870	49.500	GST11-2M □□□112C31	218
	59	2.6	71	2.5			870	49.500	GST14-2M □□□112C31	218
	58	3.2	70	3.0			865	50.000	GST11-3M □□□112C31	224
	55	1.5	66	1.4			918	53.044	GST09-3M □□□112C31	224
	52	2.1	62	2.0			988	56.250	GST11-2M □□□112C31	218
	52	2.6	62	2.5			988	56.250	GST14-2M □□□112C31	218
	50	2.6	60	2.4			1003	57.968	GST11-3M □□□112C31	224
	48	1.5	58	1.4			1043	60.278	GST09-3M □□□112C31	224
	47	2.6	57	2.4			1060	61.250	GST11-3M □□□112C31	224
	41	2.2	49	2.0			1229	71.011	GST11-3M □□□112C31	224
	40	1.2	49	1.1			1244	71.867	GST09-3M □□□112C31	224
	36	1.1	43	1.1			1414	81.667	GST09-3M □□□112C31	224
	36	2.0	43	1.9			1397	80.694	GST11-3M □□□112C31	224
	33	1.8	40	1.7			1510	87.267	GST11-3M □□□112C31	224
	29	0.9	35	0.9			1716	99.167	GST09-3M □□□112C31	224
	29	1.6	35	1.6			1716	99.167	GST11-3M □□□112C31	224
	27	3.2	33	3.1			1840	106.296	GST14-3M □□□112C31	224
	26	1.4	31	1.3			1955	112.933	GST11-3M □□□112C31	224
	23	1.3	27	1.2			2234	129.074	GST11-3M □□□112C31	224
	22	2.6	27	2.5			2255	130.278	GST14-3M □□□112C31	224
	21	2.4	25	2.3			2410	139.211	GST14-3M □□□112C31	224
	20	1.1	24	1.0			2544	146.993	GST11-3M □□□112C31	224

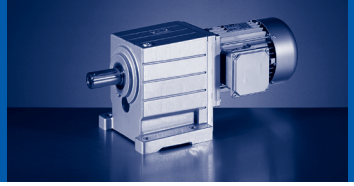

50 Hz: P_N=5.5 kW
60 Hz: P_N=6.6 kW

n_N	2900 r/min		3500 r/min				M_2 [Nm]	i		
f_N	50 Hz		60 Hz							
P_N	5.5 kW		6.6 kW							
	n_2 [r/min]	c	n_2 [r/min]	c						
	18	1.0	22	1.0			2738	158.194	GST11-3M □□□112C31	224
	18	2.2	22	2.1			2738	158.194	GST14-3M □□□112C31	224
	17	2.0	21	1.9			2962	171.111	GST14-3M □□□112C31	224
	16	0.9	19	0.8			3118	180.156	GST11-3M □□□112C31	224
	14	1.7	17	1.6			3543	204.722	GST14-3M □□□112C31	224
	12	1.4	15	1.3			4095	236.622	GST14-3M □□□112C31	224
	12	1.4	14	1.3			4300	248.458	GST14-3M □□□112C31	224
	11	1.3	13	1.2			4654	268.889	GST14-3M □□□112C31	224
	8.9	1.1	11	1.0			5648	326.333	GST14-3M □□□112C31	224

50 Hz: P_N=5.5 kW
60 Hz: P_N=6.6 kW
87 Hz: P_N=9.7 kW

n_N	1445 r/min		1745 r/min		2555 r/min		M_2 [Nm]	i		
f_N	50 Hz		60 Hz		87 Hz					
P_N	5.5 kW		6.6 kW		9.7 kW					
	n_2 [r/min]	c	n_2 [r/min]	c	n_2 [r/min]	c				
	903	1.1	1091	1.0	1597	0.9	57	1.600	GST06-1M □□□112C32	212
	889	1.8	1074	1.7	1572	1.5	58	1.625	GST07-1M □□□112C32	212
	723	1.7	873	1.6	1278	1.5	72	2.000	GST07-1M □□□112C32	212
	706	1.0	852	0.9	1248	0.8	73	2.048	GST06-1M □□□112C32	212
	645	1.0	779	0.9	1141	0.8	80	2.240	GST06-1M □□□112C32	212
	645	1.7	779	1.6	1141	1.4	80	2.240	GST07-1M □□□112C32	212
	619	3.2	748	3.0	1095	2.6	84	2.333	GST09-1M □□□112C32	212
	514	2.8	621	2.6	909	2.3	101	2.810	GST09-1M □□□112C32	212
	506	0.9	611	0.9			102	2.857	GST06-1M □□□112C32	212
	506	1.6	611	1.5	894	1.3	102	2.857	GST07-1M □□□112C32	212
	476	1.6	575	1.5	842	1.3	107	3.033	GST06-2M □□□112C32	218
	474	3.0	573	2.9	838	2.5	108	3.048	GST07-2M □□□112C32	218
	434	1.5	524	1.4	767	1.2	118	3.333	GST06-2M □□□112C32	218
	431	3.0	521	2.9	763	2.5	118	3.350	GST07-2M □□□112C32	218
	420	2.4	507	2.3	742	2.0	123	3.444	GST09-1M □□□112C32	212
	413	0.8					125	3.500	GST06-1M □□□112C32	212
	413	1.4	499	1.3	730	1.2	125	3.500	GST07-1M □□□112C32	212
	347	1.3	420	1.2	614	1.1	147	4.160	GST06-2M □□□112C32	218
	342	2.7	413	2.5	605	2.2	149	4.225	GST07-2M □□□112C32	218
	317	1.1	383	1.1	561	1.0	163	4.556	GST07-1M □□□112C32	212
	316	1.2	382	1.2	559	1.0	161	4.571	GST06-2M □□□112C32	218
	311	2.5	376	2.4	550	2.1	164	4.643	GST07-2M □□□112C32	218
	310	1.9	374	1.8	548	1.6	167	4.667	GST09-1M □□□112C32	212
	278	2.3	336	2.2	491	2.0	183	5.200	GST07-2M □□□112C32	218
	271	1.1	328	1.1	480	0.9	188	5.324	GST06-2M □□□112C32	218
	259	1.0	313	0.9	458	0.8	200	5.583	GST07-1M □□□112C32	212
	255	1.6	308	1.5	451	1.3	203	5.667	GST09-1M □□□112C32	212
	253	2.2	305	2.1	447	1.9	202	5.714	GST07-2M □□□112C32	218
	247	1.1	298	1.0	437	0.9	206	5.850	GST06-2M □□□112C32	218
	226	1.0	273	1.0	399	0.9	226	6.400	GST06-2M □□□112C32	218
	226	2.1	273	2.0	399	1.7	226	6.400	GST07-2M □□□112C32	218
	217	3.2	262	3.0	383	2.6	235	6.667	GST09-2M □□□112C32	218
	205	1.0	248	0.9			248	7.040	GST06-2M □□□112C32	218
	202	1.9	244	1.8	357	1.6	252	7.150	GST07-2M □□□112C32	218
	198	2.8	239	2.6	350	2.3	258	7.305	GST09-2M □□□112C32	218
	197	1.3	238	1.2	348	1.1	263	7.333	GST09-1M □□□112C32	212
	180	2.8	217	2.6	318	2.3	283	8.027	GST09-2M □□□112C32	218
	178	1.9	215	1.8	315	1.6	287	8.125	GST07-2M □□□112C32	218
	177	0.9	214	0.8			288	8.163	GST06-2M □□□112C32	218
	164	1.7	198	1.6	290	1.4	310	8.800	GST07-2M □□□112C32	218
	162	1.1	196	1.0	287	0.9	319	8.900	GST09-1M □□□112C32	212

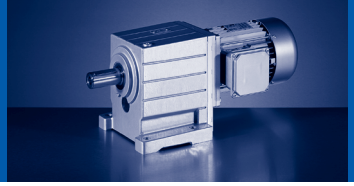

50 Hz: P_N=5.5 kW
60 Hz: P_N=6.6 kW
87 Hz: P_N=9.7 kW

n_N	1445 r/min		1745 r/min		2555 r/min		M_2 [Nm]	i		
f_N	50 Hz		60 Hz		87 Hz					
P_N	5.5 kW		6.6 kW		9.7 kW					
	n_2 [r/min]	c	n_2 [r/min]	c	n_2 [r/min]	c				
	160	0.8					318	9.010	GST06-2M □□□112C32	218
	147	1.6	177	1.5	259	1.3	348	9.856	GST07-2M □□□112C32	218
	141	3.2	170	3.0	249	2.6	362	10.267	GST09-2M □□□112C32	218
	129	1.5	156	1.4	228	1.3	395	11.200	GST07-2M □□□112C32	218
	124	2.9	150	2.8	219	2.5	411	11.667	GST09-2M □□□112C32	218
	117	2.8	141	2.6	207	2.3	436	12.362	GST09-2M □□□112C32	218
	115	1.4	139	1.3	203	1.1	443	12.571	GST07-2M □□□112C32	218
	103	2.6	124	2.5	182	2.2	495	14.048	GST09-2M □□□112C32	218
	101	1.3	122	1.2	179	1.1	504	14.286	GST07-2M □□□112C32	218
	95	2.4	115	2.4	169	2.3	535	15.156	GST09-2M □□□112C32	218
	94	1.2	113	1.2	166	1.1	543	15.400	GST07-2M □□□112C32	218
	84	2.3	101	2.3	148	2.2	607	17.222	GST09-2M □□□112C32	218
	83	1.1	100	1.1	146	1.1	617	17.500	GST07-2M □□□112C32	218
	72	1.0	87	1.0	128	0.9	707	20.044	GST07-2M □□□112C32	218
	71	2.4	86	2.4	126	2.2	716	20.289	GST11-2M □□□112C32	218
	70	1.9	85	1.9	124	1.8	724	20.533	GST09-2M □□□112C32	218
	63	0.9	77	0.9	112	0.8	803	22.778	GST07-2M □□□112C32	218
	63	2.4	76	2.4	111	2.2	813	23.056	GST11-2M □□□112C32	218
	62	1.8	75	1.8	110	1.7	823	23.333	GST09-2M □□□112C32	218
	59	0.8	71	0.8			866	24.567	GST07-2M □□□112C32	218
	58	1.6	70	1.6	103	1.5	879	24.933	GST09-2M □□□112C32	218
	58	2.0	70	2.0	103	1.9	879	24.933	GST11-2M □□□112C32	218
	51	1.5	62	1.5	90	1.5	999	28.333	GST09-2M □□□112C32	218
	51	2.0	62	2.0	90	1.9	999	28.333	GST11-2M □□□112C32	218
	45	1.3	54	1.3	79	1.2	1138	32.267	GST09-2M □□□112C32	218
	45	1.6	54	1.6	79	1.5	1138	32.267	GST11-2M □□□112C32	218
	45	2.0	54	2.0	79	1.9	1138	32.267	GST14-2M □□□112C32	218
	39	1.2	48	1.2	70	1.1	1293	36.667	GST09-2M □□□112C32	218
	39	1.6	48	1.6	70	1.5	1293	36.667	GST11-2M □□□112C32	218
	39	2.0	48	2.0	70	1.9	1293	36.667	GST14-2M □□□112C32	218
	37	1.1	45	1.1	65	1.0	1381	39.160	GST09-2M □□□112C32	218
	37	1.3	45	1.3	65	1.3	1381	39.160	GST11-2M □□□112C32	218
	37	1.6	45	1.6	65	1.6	1381	39.160	GST14-2M □□□112C32	218
	36	1.0	44	1.0	64	0.9	1394	40.136	GST09-3M □□□112C32	224
	36	3.2	43	3.2	64	3.0	1396	40.185	GST14-3M □□□112C32	224
	35	1.8	43	1.8	63	1.7	1418	40.816	GST11-3M □□□112C32	224
	34	2.8	41	2.8	60	2.8	1479	42.580	GST14-3M □□□112C32	224
	33	0.9	40	0.9	59	0.9	1503	43.267	GST09-3M □□□112C32	224
	33	1.0	39	1.0	57	1.0	1569	44.500	GST09-2M □□□112C32	218
	33	1.3	39	1.3	57	1.3	1569	44.500	GST11-2M □□□112C32	218
	33	1.6	39	1.6	57	1.6	1569	44.500	GST14-2M □□□112C32	218

50 Hz: P_N=5.5 kW
60 Hz: P_N=6.6 kW
87 Hz: P_N=9.7 kW

n_N	1445 r/min		1745 r/min		2555 r/min		M_2 [Nm]	i		
f_N	50 Hz		60 Hz		87 Hz					
P_N	5.5 kW		6.6 kW		9.7 kW					
	n_2 [r/min]	c	n_2 [r/min]	c	n_2 [r/min]	c				
	33	1.6	40	1.6	58	1.6	1528	44.000	GST11-3M □□□112C32	224
	30	2.8	36	2.8	53	2.8	1681	48.386	GST14-3M □□□112C32	224
	29	0.9	36	0.9	52	0.9	1708	49.167	GST09-3M □□□112C32	224
	29	1.1	35	1.1	52	1.1	1746	49.500	GST11-2M □□□112C32	218
	29	1.3	35	1.3	52	1.3	1746	49.500	GST14-2M □□□112C32	218
	29	1.6	35	1.6	51	1.6	1737	50.000	GST11-3M □□□112C32	224
	27	2.6	33	2.6	48	2.6	1846	53.148	GST14-3M □□□112C32	224
	26	1.1	31	1.1	45	1.1	1984	56.250	GST11-2M □□□112C32	218
	26	1.3	31	1.3	45	1.3	1984	56.250	GST14-2M □□□112C32	218
	25	1.3	30	1.3	44	1.3	2014	57.968	GST11-3M □□□112C32	224
	24	1.3	29	1.3	42	1.3	2128	61.250	GST11-3M □□□112C32	224
	24	2.4	29	2.4	43	2.4	2061	59.321	GST14-3M □□□112C32	224
	21	2.1	25	2.1	37	2.1	2398	69.042	GST14-3M □□□112C32	224
	20	1.1	25	1.1	36	1.1	2467	71.011	GST11-3M □□□112C32	224
	18	1.0	22	1.0	32	1.0	2803	80.694	GST11-3M □□□112C32	224
	18	2.1	22	2.1	33	2.1	2725	78.457	GST14-3M □□□112C32	224
	17	0.9	20	0.9	29	0.9	3031	87.267	GST11-3M □□□112C32	224
	15	0.8	18	0.8	26	0.8	3445	99.167	GST11-3M □□□112C32	224
	15	1.7	19	1.7	27	1.7	3249	93.541	GST14-3M □□□112C32	224
	15	1.8	18	1.8	27	1.8	3340	96.157	GST14-3M □□□112C32	224
	14	1.6	16	1.6	24	1.6	3692	106.296	GST14-3M □□□112C32	224
	11	1.3	13	1.3	20	1.3	4525	130.278	GST14-3M □□□112C32	224
	10	1.2	13	1.2	18	1.2	4836	139.211	GST14-3M □□□112C32	224
	9.1	1.1	11	1.1	16	1.1	5495	158.194	GST14-3M □□□112C32	224
	8.4	1.0	10	1.0	15	1.0	5944	171.111	GST14-3M □□□112C32	224
	7.1	0.8	8.5	0.8	13	0.8	7111	204.722	GST14-3M □□□112C32	224

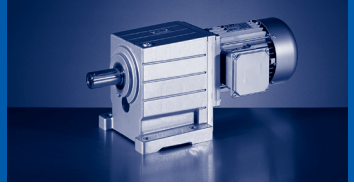

50 Hz: P_N=7.5 kW
60 Hz: P_N=9.0 kW

n_N	2890 r/min		3490 r/min				M_2 [Nm]	i		
f_N	50 Hz		60 Hz							
P_N	7.5 kW		9.0 kW							
	n_2 [r/min]	c	n_2 [r/min]	c						
	1806	1.3	2181	1.2			39	1.600	GST06-1M □□□112C41	212
	1779	2.2	2148	2.0			40	1.625	GST07-1M □□□112C41	212
	1445	2.0	1745	1.9			49	2.000	GST07-1M □□□112C41	212
	1411	1.2	1704	1.1			50	2.048	GST06-1M □□□112C41	212
	1290	1.2	1558	1.1			55	2.240	GST06-1M □□□112C41	212
	1290	2.0	1558	1.9			55	2.240	GST07-1M □□□112C41	212
	1029	3.3	1242	3.1			69	2.810	GST09-1M □□□112C41	212
	1012	1.1	1222	1.0			70	2.857	GST06-1M □□□112C41	212
	1012	1.8	1222	1.7			70	2.857	GST07-1M □□□112C41	212
	953	1.8	1151	1.7			73	3.033	GST06-2M □□□112C41	218
	867	1.7	1047	1.6			80	3.333	GST06-2M □□□112C41	218
	839	2.8	1013	2.6			84	3.444	GST09-1M □□□112C41	212
	826	1.0	997	0.9			85	3.500	GST06-1M □□□112C41	212
	826	1.6	997	1.5			85	3.500	GST07-1M □□□112C41	212
	695	1.5	839	1.4			100	4.160	GST06-2M □□□112C41	218
	684	3.2	826	3.0			102	4.225	GST07-2M □□□112C41	218
	634	1.3	766	1.3			111	4.556	GST07-1M □□□112C41	212
	632	1.5	763	1.4			110	4.571	GST06-2M □□□112C41	218
	623	3.0	752	2.8			112	4.643	GST07-2M □□□112C41	218
	619	2.2	748	2.1			114	4.667	GST09-1M □□□112C41	212
	556	2.8	671	2.6			125	5.200	GST07-2M □□□112C41	218
	543	1.3	656	1.2			128	5.324	GST06-2M □□□112C41	218
	518	1.2	625	1.1			136	5.583	GST07-1M □□□112C41	212
	510	1.9	616	1.8			138	5.667	GST09-1M □□□112C41	212
	506	2.6	611	2.5			137	5.714	GST07-2M □□□112C41	218
	494	1.3	597	1.2			141	5.850	GST06-2M □□□112C41	218
	452	1.2	545	1.1			154	6.400	GST06-2M □□□112C41	218
	452	2.4	545	2.3			154	6.400	GST07-2M □□□112C41	218
	411	1.1	496	1.1			169	7.040	GST06-2M □□□112C41	218
	404	2.3	488	2.1			172	7.150	GST07-2M □□□112C41	218
	396	3.3	478	3.1			176	7.305	GST09-2M □□□112C41	218
	394	1.5	476	1.4			179	7.333	GST09-1M □□□112C41	212
	360	3.3	435	3.1			193	8.027	GST09-2M □□□112C41	218
	356	2.2	430	2.1			195	8.125	GST07-2M □□□112C41	218
	354	1.0	428	1.0			196	8.163	GST06-2M □□□112C41	218
	328	2.0	397	1.9			212	8.800	GST07-2M □□□112C41	218
	325	1.3	392	1.2			217	8.900	GST09-1M □□□112C41	212
	321	1.0	387	0.9			217	9.010	GST06-2M □□□112C41	218
	293	1.9	354	1.8			237	9.856	GST07-2M □□□112C41	218
	289	0.9	349	0.8			240	10.000	GST06-2M □□□112C41	218
	258	0.8					269	11.200	GST06-2M □□□112C41	218

50 Hz: P_N=7.5 kW
60 Hz: P_N=9.0 kW

n_N	2890 r/min		3490 r/min				M_2 [Nm]	i		
f_N	50 Hz		60 Hz							
P_N	7.5 kW		9.0 kW							
	n_2 [r/min]	c	n_2 [r/min]	c						
	258	1.8	312	1.7			269	11.200	GST07-2M □□□112C41	218
	234	3.3	282	3.1			297	12.362	GST09-2M □□□112C41	218
	230	1.6	278	1.5			302	12.571	GST07-2M □□□112C41	218
	206	3.1	248	2.9			338	14.048	GST09-2M □□□112C41	218
	202	1.5	244	1.4			344	14.286	GST07-2M □□□112C41	218
	191	3.2	230	3.0			364	15.156	GST09-2M □□□112C41	218
	188	1.6	227	1.5			370	15.400	GST07-2M □□□112C41	218
	168	3.0	203	2.8			414	17.222	GST09-2M □□□112C41	218
	165	1.5	199	1.4			421	17.500	GST07-2M □□□112C41	218
	144	1.3	174	1.2			482	20.044	GST07-2M □□□112C41	218
	142	3.2	172	3.0			488	20.289	GST11-2M □□□112C41	218
	141	2.5	170	2.3			494	20.533	GST09-2M □□□112C41	218
	127	1.1	153	1.1			548	22.778	GST07-2M □□□112C41	218
	125	3.2	151	3.0			554	23.056	GST11-2M □□□112C41	218
	124	2.5	150	2.3			561	23.333	GST09-2M □□□112C41	218
	118	1.1	142	1.0			591	24.567	GST07-2M □□□112C41	218
	116	2.1	140	2.0			600	24.933	GST09-2M □□□112C41	218
	116	2.6	140	2.5			600	24.933	GST11-2M □□□112C41	218
	104	0.9	125	0.9			671	27.917	GST07-2M □□□112C41	218
	102	2.0	123	1.9			681	28.333	GST09-2M □□□112C41	218
	102	2.6	123	2.5			681	28.333	GST11-2M □□□112C41	218
	90	1.7	108	1.6			776	32.267	GST09-2M □□□112C41	218
	90	2.1	108	2.0			776	32.267	GST11-2M □□□112C41	218
	90	2.6	108	2.5			776	32.267	GST14-2M □□□112C41	218
	79	1.6	95	1.5			882	36.667	GST09-2M □□□112C41	218
	79	2.1	95	2.0			882	36.667	GST11-2M □□□112C41	218
	79	2.6	95	2.5			882	36.667	GST14-2M □□□112C41	218
	74	1.4	89	1.3			942	39.160	GST09-2M □□□112C41	218
	74	1.8	89	1.7			942	39.160	GST11-2M □□□112C41	218
	74	2.2	89	2.1			942	39.160	GST14-2M □□□112C41	218
	72	1.3	87	1.2			951	40.136	GST09-3M □□□112C41	224
	71	2.4	86	2.3			967	40.816	GST11-3M □□□112C41	224
	67	1.3	81	1.2			1025	43.267	GST09-3M □□□112C41	224
	66	2.3	79	2.2			1042	44.000	GST11-3M □□□112C41	224
	65	1.5	78	1.4			1070	44.500	GST09-2M □□□112C41	218
	65	1.9	78	1.8			1070	44.500	GST11-2M □□□112C41	218
	65	2.4	78	2.3			1070	44.500	GST14-2M □□□112C41	218
	59	1.3	71	1.2			1164	49.167	GST09-3M □□□112C41	224
	58	1.5	71	1.5			1190	49.500	GST11-2M □□□112C41	218
	58	1.9	71	1.8			1190	49.500	GST14-2M □□□112C41	218
	58	2.3	70	2.2			1184	50.000	GST11-3M □□□112C41	224

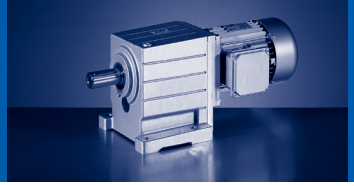

50 Hz: P_N=7.5 kW
60 Hz: P_N=9.0 kW

n_N	2890 r/min		3490 r/min				M_2 [Nm]	i		
f_N	50 Hz		60 Hz							
P_N	7.5 kW		9.0 kW							
	n_2 [r/min]	c	n_2 [r/min]	c						
	55	1.1	66	1.0			1256	53.044	GST09-3M □□□112C41	224
	51	1.5	62	1.5			1353	56.250	GST11-2M □□□112C41	218
	51	1.9	62	1.8			1353	56.250	GST14-2M □□□112C41	218
	50	1.9	60	1.8			1373	57.968	GST11-3M □□□112C41	224
	48	1.1	58	1.0			1428	60.278	GST09-3M □□□112C41	224
	47	1.9	57	1.8			1451	61.250	GST11-3M □□□112C41	224
	42	3.0	51	2.9			1635	69.042	GST14-3M □□□112C41	224
	41	1.6	49	1.5			1682	71.011	GST11-3M □□□112C41	224
	40	0.9	49	0.8			1702	71.867	GST09-3M □□□112C41	224
	37	3.0	45	2.9			1858	78.457	GST14-3M □□□112C41	224
	36	1.5	43	1.4			1911	80.694	GST11-3M □□□112C41	224
	35	0.8					1934	81.667	GST09-3M □□□112C41	224
	33	1.3	40	1.2			2067	87.267	GST11-3M □□□112C41	224
	31	2.5	37	2.4			2215	93.541	GST14-3M □□□112C41	224
	30	2.6	36	2.5			2277	96.157	GST14-3M □□□112C41	224
	29	1.2	35	1.1			2349	99.167	GST11-3M □□□112C41	224
	27	2.4	33	2.2			2518	106.296	GST14-3M □□□112C41	224
	26	1.0	31	1.0			2675	112.933	GST11-3M □□□112C41	224
	22	0.9	27	0.9			3057	129.074	GST11-3M □□□112C41	224
	22	1.9	27	1.8			3085	130.278	GST14-3M □□□112C41	224
	21	1.7	25	1.7			3297	139.211	GST14-3M □□□112C41	224
	18	1.6	22	1.5			3747	158.194	GST14-3M □□□112C41	224
	17	1.5	20	1.4			4053	171.111	GST14-3M □□□112C41	224
	14	1.2	17	1.2			4849	204.722	GST14-3M □□□112C41	224
	12	1.0	15	1.0			5604	236.622	GST14-3M □□□112C41	224
	12	1.0	14	1.0			5884	248.458	GST14-3M □□□112C41	224
	11	0.9	13	0.9			6368	268.889	GST14-3M □□□112C41	224

50 Hz: P_N=7.5 kW
60 Hz: P_N=9.0 kW
87 Hz: P_N=13.2 kW

n_N	1455 r/min		1755 r/min		2565 r/min		M_2 [Nm]	i		
f_N	50 Hz		60 Hz		87 Hz					
P_N	7.5 kW		9.0 kW		13.2 kW					
	n_2 [r/min]	c	n_2 [r/min]	c	n_2 [r/min]	c				
	895	1.4	1080	1.3	1579	1.1	79	1.625	GST07-1M □□□132C22	212
	728	1.3	878	1.2	1283	1.1	97	2.000	GST07-1M □□□132C22	212
	650	1.2	784	1.2	1145	1.0	109	2.240	GST07-1M □□□132C22	212
	518	3.1	625	2.9	913	2.6	136	2.810	GST09-1M □□□132C22	212
	509	1.1	614	1.1	898	1.0	139	2.857	GST07-1M □□□132C22	212
	477	2.4	576	2.3	842	2.0	146	3.048	GST07-2M □□□132C22	218
	434	2.3	524	2.2	766	1.9	160	3.350	GST07-2M □□□132C22	218
	422	2.7	510	2.5	745	2.2	167	3.444	GST09-1M □□□132C22	212
	416	1.0	501	1.0	733	0.9	170	3.500	GST07-1M □□□132C22	212
	344	2.0	415	1.9	607	1.7	202	4.225	GST07-2M □□□132C22	218
	313	1.9	378	1.8	553	1.6	222	4.643	GST07-2M □□□132C22	218
	312	1.7	376	1.6	550	1.4	226	4.667	GST09-1M □□□132C22	212
	280	1.7	338	1.6	493	1.4	248	5.200	GST07-2M □□□132C22	218
	257	1.7	310	1.6	453	1.4	275	5.667	GST09-1M □□□132C22	212
	255	1.6	307	1.6	449	1.4	273	5.714	GST07-2M □□□132C22	218
	227	1.5	274	1.4	401	1.3	306	6.400	GST07-2M □□□132C22	218
	204	1.4	246	1.4	359	1.2	342	7.150	GST07-2M □□□132C22	218
	199	3.2	240	3.0	351	2.7	349	7.305	GST09-2M □□□132C22	218
	181	3.0	219	2.8	320	2.5	383	8.027	GST09-2M □□□132C22	218
	179	1.4	216	1.3	316	1.2	388	8.125	GST07-2M □□□132C22	218
	165	1.3	199	1.2	292	1.1	420	8.800	GST07-2M □□□132C22	218
	162	2.6	195	2.5	285	2.2	430	9.010	GST09-2M □□□132C22	218
	148	1.2	178	1.1	260	1.0	471	9.856	GST07-2M □□□132C22	218
	142	2.4	171	2.3	250	2.0	490	10.267	GST09-2M □□□132C22	218
	130	1.1	157	1.1	229	0.9	535	11.200	GST07-2M □□□132C22	218
	125	2.2	150	2.1	220	1.8	557	11.667	GST09-2M □□□132C22	218
	118	2.1	142	2.0	208	1.8	590	12.362	GST09-2M □□□132C22	218
	116	1.0	140	1.0	204	0.8	600	12.571	GST07-2M □□□132C22	218
	104	1.9	125	1.8	183	1.6	671	14.048	GST09-2M □□□132C22	218
	102	0.9	123	0.9			682	14.286	GST07-2M □□□132C22	218
	96	1.9	116	1.9	169	1.8	724	15.156	GST09-2M □□□132C22	218
	95	0.9	114	0.9	167	0.8	736	15.400	GST07-2M □□□132C22	218
	85	1.7	102	1.7	149	1.6	823	17.222	GST09-2M □□□132C22	218
	83	0.8	100	0.8			836	17.500	GST07-2M □□□132C22	218
	72	2.8	87	2.8	126	2.7	969	20.289	GST11-2M □□□132C22	218
	71	1.5	86	1.5	125	1.4	981	20.533	GST09-2M □□□132C22	218
	63	2.7	76	2.7	111	2.5	1101	23.056	GST11-2M □□□132C22	218
	62	1.4	75	1.4	110	1.3	1114	23.333	GST09-2M □□□132C22	218
	58	1.3	70	1.3	103	1.3	1191	24.933	GST09-2M □□□132C22	218
	58	2.3	70	2.3	103	2.2	1191	24.933	GST11-2M □□□132C22	218
	51	1.1	62	1.1	91	1.1	1353	28.333	GST09-2M □□□132C22	218

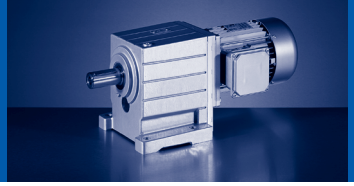

50 Hz: P_N=7.5 kW
60 Hz: P_N=9.0 kW
87 Hz: P_N=13.2 kW

n_N	1455 r/min		1755 r/min		2565 r/min		M_2 [Nm]	i		
f_N	50 Hz		60 Hz		87 Hz					
P_N	7.5 kW		9.0 kW		13.2 kW					
	n_2 [r/min]	c	n_2 [r/min]	c	n_2 [r/min]	c				
	51	2.2	62	2.2	91	2.1	1353	28.333	GST11-2M □□□132C22	218
	45	1.8	54	1.8	80	1.7	1541	32.267	GST11-2M □□□132C22	218
	45	3.1	54	3.1	80	2.9	1541	32.267	GST14-2M □□□132C22	218
	40	1.7	48	1.7	70	1.6	1751	36.667	GST11-2M □□□132C22	218
	40	3.1	48	3.1	70	2.9	1751	36.667	GST14-2M □□□132C22	218
	37	1.5	45	1.5	66	1.4	1870	39.160	GST11-2M □□□132C22	218
	37	2.6	45	2.6	66	2.4	1870	39.160	GST14-2M □□□132C22	218
	36	1.3	43	1.3	63	1.3	1920	40.816	GST11-3M □□□132C22	224
	36	2.4	44	2.4	64	2.3	1890	40.185	GST14-3M □□□132C22	224
	34	2.1	41	2.1	60	2.1	2003	42.580	GST14-3M □□□132C22	224
	33	1.2	40	1.2	58	1.2	2070	44.000	GST11-3M □□□132C22	224
	33	1.4	39	1.4	58	1.4	2125	44.500	GST11-2M □□□132C22	218
	33	2.6	39	2.6	58	2.6	2125	44.500	GST14-2M □□□132C22	218
	30	2.1	36	2.1	53	2.1	2276	48.386	GST14-3M □□□132C22	224
	29	1.2	35	1.2	51	1.2	2352	50.000	GST11-3M □□□132C22	224
	29	1.8	36	1.8	52	1.8	2364	49.500	GST14-2M □□□132C22	218
	27	1.9	33	1.9	48	1.9	2500	53.148	GST14-3M □□□132C22	224
	26	1.8	31	1.8	46	1.8	2686	56.250	GST14-2M □□□132C22	218
	25	0.9	30	0.9	44	0.9	2727	57.968	GST11-3M □□□132C22	224
	25	1.9	30	1.9	43	1.9	2791	59.321	GST14-3M □□□132C22	224
	24	1.0	29	1.0	42	1.0	2881	61.250	GST11-3M □□□132C22	224
	21	1.5	25	1.5	37	1.5	3248	69.042	GST14-3M □□□132C22	224
	19	1.5	22	1.5	33	1.5	3691	78.457	GST14-3M □□□132C22	224
	16	1.3	19	1.3	27	1.3	4400	93.541	GST14-3M □□□132C22	224
	15	1.3	18	1.3	27	1.3	4523	96.157	GST14-3M □□□132C22	224
	14	1.2	17	1.2	24	1.2	5000	106.296	GST14-3M □□□132C22	224
	11	0.9	13	0.9	18	0.9	6549	139.211	GST14-3M □□□132C22	224
	11	1.0	14	1.0	20	1.0	6128	130.278	GST14-3M □□□132C22	224

50 Hz: P_N=9.0 kW
60 Hz: P_N=11.0 kW

n_N	2890 r/min		3490 r/min				M_2 [Nm]	i		
f_N	50 Hz		60 Hz							
P_N	9.0 kW		11.0 kW							
	n_2 [r/min]	c	n_2 [r/min]	c						
	1779	1.8	2148	1.7			48	1.625	GST07-1M □□□132C21	212
	1445	1.7	1745	1.6			59	2.000	GST07-1M □□□132C21	212
	1290	1.7	1558	1.6			66	2.240	GST07-1M □□□132C21	212
	1012	1.5	1222	1.4			84	2.857	GST07-1M □□□132C21	212
	948	3.2	1145	3.0			88	3.048	GST07-2M □□□132C21	218
	863	3.1	1042	2.9			97	3.350	GST07-2M □□□132C21	218
	826	1.4	997	1.3			103	3.500	GST07-1M □□□132C21	212
	684	2.6	826	2.5			122	4.225	GST07-2M □□□132C21	218
	623	2.5	752	2.3			134	4.643	GST07-2M □□□132C21	218
	619	2.2	748	2.1			137	4.667	GST09-1M □□□132C21	212
	556	2.3	671	2.2			150	5.200	GST07-2M □□□132C21	218
	510	2.3	616	2.1			166	5.667	GST09-1M □□□132C21	212
	506	2.2	611	2.1			165	5.714	GST07-2M □□□132C21	218
	452	2.0	545	1.9			185	6.400	GST07-2M □□□132C21	218
	404	1.9	488	1.8			206	7.150	GST07-2M □□□132C21	218
	356	1.9	430	1.7			234	8.125	GST07-2M □□□132C21	218
	328	1.7	397	1.6			254	8.800	GST07-2M □□□132C21	218
	293	1.6	354	1.5			284	9.856	GST07-2M □□□132C21	218
	282	3.2	340	3.0			296	10.267	GST09-2M □□□132C21	218
	258	1.5	312	1.4			323	11.200	GST07-2M □□□132C21	218
	248	2.9	299	2.7			337	11.667	GST09-2M □□□132C21	218
	234	2.8	282	2.7			357	12.362	GST09-2M □□□132C21	218
	230	1.3	278	1.3			363	12.571	GST07-2M □□□132C21	218
	206	2.5	248	2.4			405	14.048	GST09-2M □□□132C21	218
	202	1.3	244	1.2			412	14.286	GST07-2M □□□132C21	218
	191	2.8	230	2.6			437	15.156	GST09-2M □□□132C21	218
	188	1.3	227	1.2			444	15.400	GST07-2M □□□132C21	218
	168	2.5	203	2.4			497	17.222	GST09-2M □□□132C21	218
	165	1.2	199	1.2			505	17.500	GST07-2M □□□132C21	218
	141	2.3	170	2.2			592	20.533	GST09-2M □□□132C21	218
	124	2.0	150	1.9			673	23.333	GST09-2M □□□132C21	218
	116	2.0	140	1.9			719	24.933	GST09-2M □□□132C21	218
	102	1.7	123	1.6			818	28.333	GST09-2M □□□132C21	218
	90	2.8	108	2.6			931	32.267	GST11-2M □□□132C21	218
	79	2.5	95	2.4			1058	36.667	GST11-2M □□□132C21	218
	74	2.3	89	2.1			1130	39.160	GST11-2M □□□132C21	218
	71	2.0	86	1.9			1160	40.816	GST11-3M □□□132C21	224
	66	1.9	79	1.8			1251	44.000	GST11-3M □□□132C21	224
	65	2.3	78	2.2			1284	44.500	GST11-2M □□□132C21	218
	58	1.9	70	1.8			1421	50.000	GST11-3M □□□132C21	224
	58	3.0	71	2.9			1428	49.500	GST14-2M □□□132C21	218

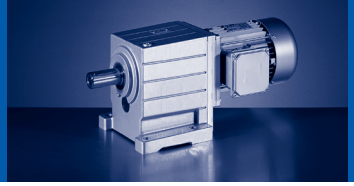

50 Hz: P_N=9.0 kW
60 Hz: P_N=11.0 kW

n_N	2890 r/min		3490 r/min				M_2 [Nm]	i		
f_N	50 Hz		60 Hz							
P_N	9.0 kW		11.0 kW							
	n_2 [r/min]	c	n_2 [r/min]	c						
	54	3.2	66	3.0			1511	53.148	GST14-3M □□□132C21	224
	51	3.0	62	2.9			1623	56.250	GST14-2M □□□132C21	218
	50	1.6	60	1.5			1648	57.968	GST11-3M □□□132C21	224
	49	3.1	59	3.0			1686	59.321	GST14-3M □□□132C21	224
	47	1.6	57	1.5			1741	61.250	GST11-3M □□□132C21	224
	42	2.5	51	2.4			1962	69.042	GST14-3M □□□132C21	224
	41	1.3	49	1.2			2018	71.011	GST11-3M □□□132C21	224
	37	2.5	45	2.4			2230	78.457	GST14-3M □□□132C21	224
	36	1.2	43	1.2			2293	80.694	GST11-3M □□□132C21	224
	33	1.1	40	1.0			2480	87.267	GST11-3M □□□132C21	224
	31	2.1	37	2.0			2658	93.541	GST14-3M □□□132C21	224
	30	2.2	36	2.1			2733	96.157	GST14-3M □□□132C21	224
	29	1.0	35	1.0			2818	99.167	GST11-3M □□□132C21	224
	27	2.0	33	1.9			3021	106.296	GST14-3M □□□132C21	224
	26	0.8					3210	112.933	GST11-3M □□□132C21	224
	22	1.6	27	1.5			3703	130.278	GST14-3M □□□132C21	224
	21	1.5	25	1.4			3956	139.211	GST14-3M □□□132C21	224
	18	1.3	22	1.3			4496	158.194	GST14-3M □□□132C21	224
	17	1.2	20	1.2			4863	171.111	GST14-3M □□□132C21	224

50 Hz: P_N=9.2 kW
60 Hz: P_N=11.0 kW
87 Hz: P_N=16.2 kW

n_N	1450 r/min		1750 r/min		2560 r/min		M_2 [Nm]	i		
f_N	50 Hz		60 Hz		87 Hz					
P_N	9.2 kW		11.0 kW		16.2 kW					
	n_2 [r/min]	c	n_2 [r/min]	c	n_2 [r/min]	c				
	930	3.0	1122	2.8	1641	2.5	93	1.560	GST09-1M □□□132C32	212
	892	1.1	1077	1.0	1575	0.9	97	1.625	GST07-1M □□□132C32	212
	725	1.0	875	1.0	1280	0.9	119	2.000	GST07-1M □□□132C32	212
	708	2.8	855	2.6	1250	2.3	122	2.048	GST09-1M □□□132C32	212
	647	1.0	781	1.0	1143	0.8	134	2.240	GST07-1M □□□132C32	212
	621	2.7	750	2.5	1097	2.2	139	2.333	GST09-1M □□□132C32	212
	516	2.5	623	2.4	911	2.1	168	2.810	GST09-1M □□□132C32	212
	508	0.9	613	0.9			171	2.857	GST07-1M □□□132C32	212
	476	2.0	574	1.9	840	1.6	179	3.048	GST07-2M □□□132C32	218
	433	1.9	522	1.8	764	1.6	197	3.350	GST07-2M □□□132C32	218
	421	2.2	508	2.1	743	1.8	206	3.444	GST09-1M □□□132C32	212
	414	0.8					209	3.500	GST07-1M □□□132C32	212
	343	1.6	414	1.5	606	1.3	248	4.225	GST07-2M □□□132C32	218
	312	1.5	377	1.4	551	1.3	273	4.643	GST07-2M □□□132C32	218
	311	1.4	375	1.3	549	1.1	279	4.667	GST09-1M □□□132C32	212
	279	1.4	337	1.3	492	1.2	306	5.200	GST07-2M □□□132C32	218
	272	3.2	329	3.0	481	2.7	313	5.324	GST09-2M □□□132C32	218
	256	1.4	309	1.3	452	1.2	338	5.667	GST09-1M □□□132C32	212
	254	1.3	306	1.3	448	1.1	336	5.714	GST07-2M □□□132C32	218
	248	3.0	299	2.8	438	2.5	344	5.850	GST09-2M □□□132C32	218
	227	1.2	273	1.2	400	1.0	376	6.400	GST07-2M □□□132C32	218
	218	2.7	263	2.6	384	2.3	392	6.667	GST09-2M □□□132C32	218
	203	1.2	245	1.1	358	1.0	420	7.150	GST07-2M □□□132C32	218
	199	2.6	240	2.4	351	2.2	429	7.305	GST09-2M □□□132C32	218
	181	2.4	218	2.3	319	2.0	472	8.027	GST09-2M □□□132C32	218
	179	1.1	215	1.1	315	0.9	478	8.125	GST07-2M □□□132C32	218
	165	1.0	199	1.0	291	0.9	517	8.800	GST07-2M □□□132C32	218
	161	2.1	194	2.0	284	1.8	530	9.010	GST09-2M □□□132C32	218
	147	1.0	178	0.9			579	9.856	GST07-2M □□□132C32	218
	141	2.0	171	1.9	249	1.6	604	10.267	GST09-2M □□□132C32	218
	130	0.9	156	0.9			658	11.200	GST07-2M □□□132C32	218
	124	1.8	150	1.7	219	1.5	686	11.667	GST09-2M □□□132C32	218
	117	1.7	142	1.6	207	1.4	727	12.362	GST09-2M □□□132C32	218
	115	0.8					739	12.571	GST07-2M □□□132C32	218
	103	1.6	125	1.5	182	1.3	826	14.048	GST09-2M □□□132C32	218
	102	3.1	123	2.9	179	2.6	840	14.286	GST11-2M □□□132C32	218
	96	1.5	116	1.5	169	1.4	891	15.156	GST09-2M □□□132C32	218
	94	3.0	114	3.0	166	2.8	905	15.400	GST11-2M □□□132C32	218
	84	1.4	102	1.4	149	1.3	1012	17.222	GST09-2M □□□132C32	218
	83	2.7	100	2.7	146	2.6	1029	17.500	GST11-2M □□□132C32	218
	72	2.3	86	2.3	126	2.2	1193	20.289	GST11-2M □□□132C32	218

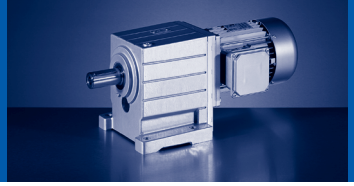

50 Hz: P_N=9.2 kW
60 Hz: P_N=11.0 kW
87 Hz: P_N=16.2 kW

n_N	1450 r/min		1750 r/min		2560 r/min		M_2 [Nm]	i		
f_N	50 Hz		60 Hz		87 Hz					
P_N	9.2 kW		11.0 kW		16.2 kW					
	n_2 [r/min]	c	n_2 [r/min]	c	n_2 [r/min]	c				
	71	1.2	85	1.2	125	1.2	1207	20.533	GST09-2M □□□132C32	218
	63	2.2	76	2.2	111	2.0	1355	23.056	GST11-2M □□□132C32	218
	62	1.1	75	1.1	110	1.1	1372	23.333	GST09-2M □□□132C32	218
	59	3.1	71	3.1	104	2.9	1444	24.567	GST14-2M □□□132C32	218
	58	1.1	70	1.1	103	1.0	1466	24.933	GST09-2M □□□132C32	218
	58	1.9	70	1.9	103	1.8	1466	24.933	GST11-2M □□□132C32	218
	52	3.1	63	3.1	92	2.9	1641	27.917	GST14-2M □□□132C32	218
	51	0.9	62	0.9	90	0.9	1666	28.333	GST09-2M □□□132C32	218
	51	1.8	62	1.8	90	1.7	1666	28.333	GST11-2M □□□132C32	218
	45	1.5	54	1.5	79	1.4	1897	32.267	GST11-2M □□□132C32	218
	45	2.5	54	2.5	79	2.4	1897	32.267	GST14-2M □□□132C32	218
	40	1.4	48	1.4	70	1.3	2155	36.667	GST11-2M □□□132C32	218
	40	2.5	48	2.5	70	2.4	2155	36.667	GST14-2M □□□132C32	218
	37	1.2	45	1.2	65	1.2	2302	39.160	GST11-2M □□□132C32	218
	37	2.1	45	2.1	65	2.0	2302	39.160	GST14-2M □□□132C32	218
	36	1.1	43	1.1	63	1.0	2363	40.816	GST11-3M □□□132C32	224
	36	1.9	44	1.9	64	1.8	2327	40.185	GST14-3M □□□132C32	224
	34	1.7	41	1.7	60	1.7	2466	42.580	GST14-3M □□□132C32	224
	33	1.0	40	1.0	58	1.0	2548	44.000	GST11-3M □□□132C32	224
	33	1.1	39	1.1	58	1.1	2616	44.500	GST11-2M □□□132C32	218
	33	2.1	39	2.1	58	2.1	2616	44.500	GST14-2M □□□132C32	218
	30	1.7	36	1.7	53	1.7	2802	48.386	GST14-3M □□□132C32	224
	29	0.9	35	0.9	51	0.9	2895	50.000	GST11-3M □□□132C32	224
	29	1.5	35	1.5	52	1.5	2910	49.500	GST14-2M □□□132C32	218
	27	1.6	33	1.6	48	1.6	3077	53.148	GST14-3M □□□132C32	224
	26	1.5	31	1.5	46	1.5	3307	56.250	GST14-2M □□□132C32	218
	24	1.5	30	1.5	43	1.5	3435	59.321	GST14-3M □□□132C32	224
	21	1.2	25	1.2	37	1.2	3998	69.042	GST14-3M □□□132C32	224
	19	1.2	22	1.2	33	1.2	4543	78.457	GST14-3M □□□132C32	224
	16	1.0	19	1.0	27	1.0	5416	93.541	GST14-3M □□□132C32	224
	15	1.1	18	1.1	27	1.1	5568	96.157	GST14-3M □□□132C32	224
	14	1.0	17	1.0	24	1.0	6155	106.296	GST14-3M □□□132C32	224

50 Hz: P_N=11.0 kW
60 Hz: P_N=13.2 kW
87 Hz: P_N=19.3 kW

n_N	1460 r/min		1760 r/min		2565 r/min		M_2 [Nm]	i		
f_N	50 Hz		60 Hz		87 Hz					
P_N	11.0 kW		13.2 kW		19.3 kW					
	n_2 [r/min]	c	n_2 [r/min]	c	n_2 [r/min]	c				
	936	2.5	1128	2.4	1647	2.1	111	1.560	GST09-1M □□□160C22	212
	899	0.9	1083	0.9			115	1.625	GST07-1M □□□160C22	212
	730	0.9	880	0.8			142	2.000	GST07-1M □□□160C22	212
	713	2.3	860	2.2	1255	2.0	145	2.048	GST09-1M □□□160C22	212
	652	0.9	786	0.8			159	2.240	GST07-1M □□□160C22	212
	626	2.2	754	2.1	1101	1.9	165	2.333	GST09-1M □□□160C22	212
	520	2.1	626	2.0	915	1.8	199	2.810	GST09-1M □□□160C22	212
	479	1.7	577	1.6	843	1.4	213	3.048	GST07-2M □□□160C22	218
	436	1.6	525	1.5	767	1.3	234	3.350	GST07-2M □□□160C22	218
	424	1.8	511	1.7	746	1.5	244	3.444	GST09-1M □□□160C22	212
	360	3.1	434	2.9	634	2.6	283	4.056	GST09-2M □□□160C22	218
	346	1.4	417	1.3	608	1.1	295	4.225	GST07-2M □□□160C22	218
	328	3.0	395	2.8	577	2.5	311	4.457	GST09-2M □□□160C22	218
	315	1.3	379	1.2	554	1.1	324	4.643	GST07-2M □□□160C22	218
	281	1.2	339	1.1	494	1.0	363	5.200	GST07-2M □□□160C22	218
	274	2.7	331	2.5	483	2.2	372	5.324	GST09-2M □□□160C22	218
	256	1.1	308	1.1	450	0.9	399	5.714	GST07-2M □□□160C22	218
	250	2.5	301	2.4	439	2.1	408	5.850	GST09-2M □□□160C22	218
	228	1.0	275	1.0	402	0.9	447	6.400	GST07-2M □□□160C22	218
	219	2.3	264	2.2	386	1.9	465	6.667	GST09-2M □□□160C22	218
	204	1.0	246	0.9	359	0.8	499	7.150	GST07-2M □□□160C22	218
	200	2.2	241	2.1	352	1.8	510	7.305	GST09-2M □□□160C22	218
	182	2.0	219	1.9	320	1.7	560	8.027	GST09-2M □□□160C22	218
	180	1.0	217	0.9			567	8.125	GST07-2M □□□160C22	218
	166	0.9	200	0.8			614	8.800	GST07-2M □□□160C22	218
	162	1.8	195	1.7	285	1.5	629	9.010	GST09-2M □□□160C22	218
	142	1.6	171	1.6	250	1.4	717	10.267	GST09-2M □□□160C22	218
	130	3.0	157	2.9	230	2.5	782	11.200	GST11-2M □□□160C22	218
	125	1.5	151	1.4	220	1.2	814	11.667	GST09-2M □□□160C22	218
	118	1.5	142	1.4	208	1.2	863	12.362	GST09-2M □□□160C22	218
	116	2.9	140	2.7	204	2.4	878	12.571	GST11-2M □□□160C22	218
	104	1.3	125	1.2	183	1.1	981	14.048	GST09-2M □□□160C22	218
	102	2.6	123	2.5	180	2.2	997	14.286	GST11-2M □□□160C22	218
	96	1.3	116	1.3	170	1.2	1058	15.156	GST09-2M □□□160C22	218
	95	2.5	114	2.5	167	2.4	1075	15.400	GST11-2M □□□160C22	218
	85	1.1	102	1.1	149	1.1	1202	17.222	GST09-2M □□□160C22	218
	83	2.3	101	2.3	147	2.1	1222	17.500	GST11-2M □□□160C22	218
	72	2.0	87	2.0	127	1.9	1416	20.289	GST11-2M □□□160C22	218
	64	3.2	77	3.2	113	3.0	1590	22.778	GST14-2M □□□160C22	218
	63	1.8	76	1.8	112	1.7	1609	23.056	GST11-2M □□□160C22	218
	59	1.6	71	1.6	103	1.5	1741	24.933	GST11-2M □□□160C22	218

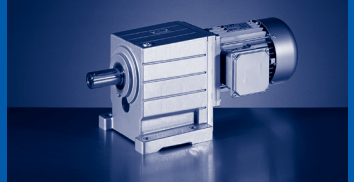

50 Hz: P_N=11.0 kW
60 Hz: P_N=13.2 kW
87 Hz: P_N=19.3 kW

n_N	1460 r/min		1760 r/min		2565 r/min		M_2 [Nm]	i		
f_N	50 Hz		60 Hz		87 Hz					
P_N	11.0 kW		13.2 kW		19.3 kW					
	n_2 [r/min]	c	n_2 [r/min]	c	n_2 [r/min]	c				
	59	3.1	72	3.1	105	2.9	1715	24.567	GST14-2M □□□160C22	218
	52	1.5	62	1.5	91	1.4	1978	28.333	GST11-2M □□□160C22	218
	52	2.8	63	2.8	92	2.6	1949	27.917	GST14-2M □□□160C22	218
	45	2.4	55	2.4	80	2.3	2252	32.267	GST14-2M □□□160C22	218
	40	2.3	48	2.3	70	2.1	2560	36.667	GST14-2M □□□160C22	218
	37	2.0	45	2.0	66	1.9	2734	39.160	GST14-2M □□□160C22	218
	36	1.6	44	1.6	64	1.5	2763	40.185	GST14-3M □□□160C22	224
	34	1.5	41	1.5	60	1.5	2928	42.580	GST14-3M □□□160C22	224
	33	1.9	40	1.9	58	1.9	3106	44.500	GST14-2M □□□160C22	218
	30	1.5	36	1.5	53	1.5	3327	48.386	GST14-3M □□□160C22	224
	28	1.3	33	1.3	48	1.3	3654	53.148	GST14-3M □□□160C22	224
	25	1.3	30	1.3	43	1.3	4079	59.321	GST14-3M □□□160C22	224
	21	1.0	26	1.0	37	1.0	4747	69.042	GST14-3M □□□160C22	224
	19	1.0	22	1.0	33	1.0	5395	78.457	GST14-3M □□□160C22	224
	15	0.9	18	0.9	27	0.9	6612	96.157	GST14-3M □□□160C22	224

50 Hz: P_N=15.0 kW
60 Hz: P_N=18.0 kW
87 Hz: P_N=26.4 kW

n_N	1460 r/min		1760 r/min		2565 r/min		M_2 [Nm]	i		
f_N	50 Hz		60 Hz		87 Hz					
P_N	15.0 kW		18.0 kW		26.4 kW					
	n_2 [r/min]	c	n_2 [r/min]	c	n_2 [r/min]	c				
	936	1.8	1128	1.7	1647	1.5	151	1.560	GST09-1M □□□160C32	212
	713	1.7	860	1.6	1255	1.4	198	2.048	GST09-1M □□□160C32	212
	626	1.6	754	1.6	1101	1.4	226	2.333	GST09-1M □□□160C32	212
	520	1.5	626	1.5	915	1.3	272	2.810	GST09-1M □□□160C32	212
	479	1.2	577	1.2	843	1.0	290	3.048	GST07-2M □□□160C32	218
	436	1.2	525	1.1	767	1.0	319	3.350	GST07-2M □□□160C32	218
	424	1.3	511	1.3	746	1.1	333	3.444	GST09-1M □□□160C32	212
	360	2.3	434	2.2	634	1.9	386	4.056	GST09-2M □□□160C32	218
	346	1.0	417	0.9	608	0.8	402	4.225	GST07-2M □□□160C32	218
	328	2.2	395	2.1	577	1.8	424	4.457	GST09-2M □□□160C32	218
	315	0.9	379	0.9			442	4.643	GST07-2M □□□160C32	218
	281	0.9	339	0.8			495	5.200	GST07-2M □□□160C32	218
	274	2.0	331	1.9	483	1.6	507	5.324	GST09-2M □□□160C32	218
	274	3.2	331	3.0	483	2.6	507	5.324	GST11-2M □□□160C32	218
	256	0.8					544	5.714	GST07-2M □□□160C32	218
	250	1.8	301	1.7	439	1.5	557	5.850	GST09-2M □□□160C32	218
	250	3.2	301	3.0	439	2.7	557	5.850	GST11-2M □□□160C32	218
	228	3.0	275	2.8	402	2.5	609	6.400	GST11-2M □□□160C32	218
	219	1.7	264	1.6	386	1.4	635	6.667	GST09-2M □□□160C32	218
	213	3.2	256	3.0	374	2.6	653	6.864	GST11-2M □□□160C32	218
	200	1.6	241	1.5	352	1.3	695	7.305	GST09-2M □□□160C32	218
	187	2.9	226	2.7	330	2.4	743	7.800	GST11-2M □□□160C32	218
	182	1.5	219	1.4	320	1.2	764	8.027	GST09-2M □□□160C32	218
	162	1.3	195	1.3	285	1.1	858	9.010	GST09-2M □□□160C32	218
	162	2.6	195	2.5	285	2.2	858	9.010	GST11-2M □□□160C32	218
	148	2.5	179	2.4	261	2.1	938	9.856	GST11-2M □□□160C32	218
	142	1.2	171	1.1	250	1.0	977	10.267	GST09-2M □□□160C32	218
	130	2.2	157	2.1	230	1.9	1066	11.200	GST11-2M □□□160C32	218
	125	1.1	151	1.0	220	0.9	1111	11.667	GST09-2M □□□160C32	218
	118	1.1	142	1.0	208	0.9	1177	12.362	GST09-2M □□□160C32	218
	116	2.1	140	2.0	204	1.8	1197	12.571	GST11-2M □□□160C32	218
	104	1.0	125	0.9	183	0.8	1337	14.048	GST09-2M □□□160C32	218
	104	3.2	125	3.0	183	2.7	1337	14.048	GST14-2M □□□160C32	218
	102	1.9	123	1.8	180	1.6	1360	14.286	GST11-2M □□□160C32	218
	96	0.9	116	0.9	170	0.9	1443	15.156	GST09-2M □□□160C32	218
	96	3.1	116	3.1	170	2.9	1443	15.156	GST14-2M □□□160C32	218
	95	1.8	114	1.8	167	1.8	1466	15.400	GST11-2M □□□160C32	218
	85	0.8	102	0.8			1639	17.222	GST09-2M □□□160C32	218
	85	2.8	102	2.8	149	2.6	1639	17.222	GST14-2M □□□160C32	218
	83	1.7	101	1.7	147	1.6	1666	17.500	GST11-2M □□□160C32	218
	73	2.6	88	2.6	128	2.4	1908	20.044	GST14-2M □□□160C32	218

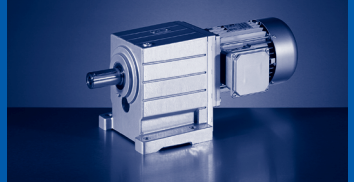

50 Hz: P_N=15.0 kW
60 Hz: P_N=18.0 kW
87 Hz: P_N=26.4 kW

n_N	1460 r/min		1760 r/min		2565 r/min		M_2 [Nm]	i		
f_N	50 Hz		60 Hz		87 Hz					
P_N	15.0 kW		18.0 kW		26.4 kW					
	n_2 [r/min]	c	n_2 [r/min]	c	n_2 [r/min]	c				
	72	1.4	87	1.4	127	1.4	1931	20.289	GST11-2M □□□160C32	218
	64	2.3	77	2.3	113	2.2	2168	22.778	GST14-2M □□□160C32	218
	63	1.3	76	1.3	112	1.3	2195	23.056	GST11-2M □□□160C32	218
	59	1.2	71	1.2	103	1.1	2373	24.933	GST11-2M □□□160C32	218
	59	2.2	72	2.2	105	2.1	2339	24.567	GST14-2M □□□160C32	218
	52	1.1	62	1.1	91	1.0	2697	28.333	GST11-2M □□□160C32	218
	52	2.0	63	2.0	92	1.9	2657	27.917	GST14-2M □□□160C32	218
	45	1.8	55	1.8	80	1.7	3071	32.267	GST14-2M □□□160C32	218
	40	1.7	48	1.7	70	1.6	3490	36.667	GST14-2M □□□160C32	218
	37	1.5	45	1.5	66	1.4	3728	39.160	GST14-2M □□□160C32	218
	36	1.2	44	1.2	64	1.1	3768	40.185	GST14-3M □□□160C32	224
	34	1.1	41	1.1	60	1.1	3992	42.580	GST14-3M □□□160C32	224
	33	1.4	40	1.4	58	1.4	4236	44.500	GST14-2M □□□160C32	218
	30	1.1	36	1.1	53	1.1	4537	48.386	GST14-3M □□□160C32	224
	28	1.0	33	1.0	48	1.0	4983	53.148	GST14-3M □□□160C32	224
	25	1.0	30	1.0	43	1.0	5562	59.321	GST14-3M □□□160C32	224

50 Hz: P_N=18.5 kW
60 Hz: P_N=22.2 kW
87 Hz: P_N=32.4 kW

n_N	1470 r/min		1770 r/min		2575 r/min		M_2 [Nm]	i		
f_N	50 Hz		60 Hz		87 Hz					
P_N	18.5 kW		22.2 kW		32.4 kW					
	n_2 [r/min]	c	n_2 [r/min]	c	n_2 [r/min]	c				
	942	1.5	1135	1.4	1654	1.3	185	1.560	GST09-1M □□□180C12	212
	718	1.4	864	1.3	1260	1.2	242	2.048	GST09-1M □□□180C12	212
	630	1.3	759	1.3	1106	1.1	276	2.333	GST09-1M □□□180C12	212
	523	1.3	630	1.2	918	1.1	333	2.810	GST09-1M □□□180C12	212
	427	1.1	514	1.0	749	0.9	408	3.444	GST09-1M □□□180C12	212
	362	1.9	436	1.8	636	1.6	473	4.056	GST09-2M □□□180C12	218
	362	2.8	436	2.7	636	2.3	473	4.056	GST11-2M □□□180C12	218
	330	1.8	397	1.7	579	1.5	520	4.457	GST09-2M □□□180C12	218
	330	2.8	397	2.7	579	2.3	520	4.457	GST11-2M □□□180C12	218
	283	2.8	340	2.7	496	2.3	606	5.200	GST14-2M □□□180C12	218
	276	1.6	333	1.5	485	1.3	621	5.324	GST09-2M □□□180C12	218
	276	2.6	333	2.4	485	2.1	621	5.324	GST11-2M □□□180C12	218
	257	2.8	310	2.7	452	2.3	666	5.714	GST14-2M □□□180C12	218
	251	1.5	303	1.4	441	1.3	682	5.850	GST09-2M □□□180C12	218
	251	2.6	303	2.5	441	2.2	682	5.850	GST11-2M □□□180C12	218
	234	2.8	282	2.7	411	2.3	733	6.286	GST14-2M □□□180C12	218
	230	2.4	277	2.3	403	2.0	746	6.400	GST11-2M □□□180C12	218
	221	1.4	266	1.3	387	1.1	777	6.667	GST09-2M □□□180C12	218
	214	2.6	258	2.4	376	2.2	800	6.864	GST11-2M □□□180C12	218
	201	1.3	242	1.2	353	1.1	852	7.305	GST09-2M □□□180C12	218
	189	2.3	227	2.2	331	1.9	910	7.800	GST11-2M □□□180C12	218
	183	1.2	221	1.2	321	1.0	936	8.027	GST09-2M □□□180C12	218
	183	2.8	221	2.7	321	2.3	936	8.027	GST14-2M □□□180C12	218
	167	2.8	201	2.7	293	2.3	1026	8.800	GST14-2M □□□180C12	218
	163	1.1	197	1.0	286	0.9	1051	9.010	GST09-2M □□□180C12	218
	163	2.2	197	2.0	286	1.8	1051	9.010	GST11-2M □□□180C12	218
	149	2.0	180	1.9	262	1.7	1149	9.856	GST11-2M □□□180C12	218
	149	2.7	180	2.5	262	2.2	1148	9.841	GST14-2M □□□180C12	218
	143	1.0	172	0.9	251	0.8	1197	10.267	GST09-2M □□□180C12	218
	134	2.8	161	2.7	235	2.3	1283	11.000	GST14-2M □□□180C12	218
	131	1.8	158	1.7	230	1.5	1306	11.200	GST11-2M □□□180C12	218
	126	0.9	152	0.8			1360	11.667	GST09-2M □□□180C12	218
	119	0.9	143	0.8			1441	12.362	GST09-2M □□□180C12	218
	119	2.8	143	2.7	209	2.3	1441	12.362	GST14-2M □□□180C12	218
	117	1.7	141	1.6	205	1.4	1466	12.571	GST11-2M □□□180C12	218
	105	2.6	126	2.5	184	2.2	1638	14.048	GST14-2M □□□180C12	218
	103	1.6	124	1.5	181	1.3	1666	14.286	GST11-2M □□□180C12	218
	97	2.5	117	2.5	170	2.4	1767	15.156	GST14-2M □□□180C12	218
	96	1.5	115	1.5	168	1.4	1796	15.400	GST11-2M □□□180C12	218
	85	2.3	103	2.3	150	2.2	2008	17.222	GST14-2M □□□180C12	218
	84	1.4	101	1.4	147	1.3	2041	17.500	GST11-2M □□□180C12	218

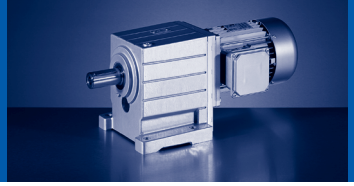

50 Hz: P_N=18.5 kW
60 Hz: P_N=22.2 kW
87 Hz: P_N=32.4 kW

n_N	1470 r/min		1770 r/min		2575 r/min		M_2 [Nm]	i		
f_N	50 Hz		60 Hz		87 Hz					
P_N	18.5 kW		22.2 kW		32.4 kW					
	n_2 [r/min]	c	n_2 [r/min]	c	n_2 [r/min]	c				
	73	1.2	87	1.2	127	1.1	2366	20.289	GST11-2M □□□180C12	218
	73	2.1	88	2.1	129	2.0	2337	20.044	GST14-2M □□□180C12	218
	65	1.9	78	1.9	113	1.8	2656	22.778	GST14-2M □□□180C12	218
	64	1.1	77	1.1	112	1.0	2688	23.056	GST11-2M □□□180C12	218
	60	1.8	72	1.8	105	1.7	2865	24.567	GST14-2M □□□180C12	218
	59	1.0	71	1.0	104	0.9	2907	24.933	GST11-2M □□□180C12	218
	53	1.7	63	1.7	92	1.6	3255	27.917	GST14-2M □□□180C12	218
	52	0.9	63	0.9	91	0.8	3304	28.333	GST11-2M □□□180C12	218
	46	1.4	55	1.4	80	1.4	3762	32.267	GST14-2M □□□180C12	218
	40	1.4	48	1.4	70	1.3	4275	36.667	GST14-2M □□□180C12	218
	38	1.2	45	1.2	66	1.1	4566	39.160	GST14-2M □□□180C12	218
	37	1.0	44	1.0	64	0.9	4615	40.185	GST14-3M □□□180C12	224
	35	0.9	42	0.9	61	0.9	4890	42.580	GST14-3M □□□180C12	224
	33	1.1	40	1.1	58	1.1	5189	44.500	GST14-2M □□□180C12	218
	30	0.9	37	0.9	53	0.9	5557	48.386	GST14-3M □□□180C12	224

50 Hz: P_N=22.0 kW
60 Hz: P_N=26.4 kW
87 Hz: P_N=38.7 kW

n_N	1465 r/min		1765 r/min		2560 r/min		M_2 [Nm]	i		
f_N	50 Hz		60 Hz		87 Hz					
P_N	22.0 kW		26.4 kW		38.7 kW					
	n_2 [r/min]	c	n_2 [r/min]	c	n_2 [r/min]	c				
	939	1.3	1131	1.2	1651	1.1	220	1.560	GST09-1M □□□180C32	212
	716	1.2	862	1.1	1258	1.0	289	2.048	GST09-1M □□□180C32	212
	628	1.1	756	1.1	1104	0.9	330	2.333	GST09-1M □□□180C32	212
	521	1.1	628	1.0	917	0.9	397	2.810	GST09-1M □□□180C32	212
	425	0.9	512	0.9			487	3.444	GST09-1M □□□180C32	212
	361	1.6	435	1.5	635	1.3	564	4.056	GST09-2M □□□180C32	218
	361	2.6	435	2.5	635	2.2	564	4.056	GST11-2M □□□180C32	218
	329	1.5	396	1.4	578	1.3	620	4.457	GST09-2M □□□180C32	218
	329	2.6	396	2.5	578	2.2	620	4.457	GST11-2M □□□180C32	218
	282	3.2	339	3.0	495	2.6	724	5.200	GST14-2M □□□180C32	218
	275	1.3	332	1.3	484	1.1	741	5.324	GST09-2M □□□180C32	218
	275	2.2	332	2.0	484	1.8	741	5.324	GST11-2M □□□180C32	218
	256	3.2	309	3.0	451	2.6	795	5.714	GST14-2M □□□180C32	218
	250	1.3	302	1.2	440	1.1	814	5.850	GST09-2M □□□180C32	218
	250	2.2	302	2.1	440	1.8	814	5.850	GST11-2M □□□180C32	218
	233	3.1	281	2.9	410	2.6	875	6.286	GST14-2M □□□180C32	218
	229	2.0	276	1.9	402	1.7	890	6.400	GST11-2M □□□180C32	218
	220	1.2	265	1.1	386	1.0	928	6.667	GST09-2M □□□180C32	218
	213	2.2	257	2.1	375	1.8	955	6.864	GST11-2M □□□180C32	218
	201	1.1	242	1.0	353	0.9	1016	7.305	GST09-2M □□□180C32	218
	188	2.0	226	1.8	330	1.6	1085	7.800	GST11-2M □□□180C32	218
	183	1.0	220	1.0	321	0.9	1117	8.027	GST09-2M □□□180C32	218
	183	2.9	220	2.7	321	2.4	1117	8.027	GST14-2M □□□180C32	218
	167	3.1	201	2.9	293	2.6	1224	8.800	GST14-2M □□□180C32	218
	163	0.9	196	0.9			1254	9.010	GST09-2M □□□180C32	218
	163	1.8	196	1.7	286	1.5	1254	9.010	GST11-2M □□□180C32	218
	149	1.7	179	1.6	261	1.4	1371	9.856	GST11-2M □□□180C32	218
	149	2.6	179	2.5	262	2.2	1369	9.841	GST14-2M □□□180C32	218
	143	0.8					1428	10.267	GST09-2M □□□180C32	218
	133	2.6	161	2.4	234	2.2	1531	11.000	GST14-2M □□□180C32	218
	131	1.5	158	1.5	230	1.3	1558	11.200	GST11-2M □□□180C32	218
	119	2.4	143	2.3	208	2.0	1720	12.362	GST14-2M □□□180C32	218
	117	1.4	140	1.4	205	1.2	1749	12.571	GST11-2M □□□180C32	218
	104	2.2	126	2.1	183	1.8	1955	14.048	GST14-2M □□□180C32	218
	103	1.3	124	1.2	180	1.1	1988	14.286	GST11-2M □□□180C32	218
	97	2.1	117	2.1	170	2.0	2109	15.156	GST14-2M □□□180C32	218
	95	1.3	115	1.3	167	1.2	2143	15.400	GST11-2M □□□180C32	218
	85	1.9	103	1.9	150	1.8	2396	17.222	GST14-2M □□□180C32	218
	84	1.1	101	1.1	147	1.1	2435	17.500	GST11-2M □□□180C32	218
	73	1.8	88	1.8	129	1.7	2789	20.044	GST14-2M □□□180C32	218
	72	1.0	87	1.0	127	0.9	2823	20.289	GST11-2M □□□180C32	218

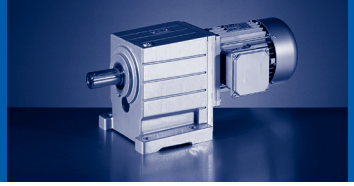

50 Hz: P_N=22.0 kW
60 Hz: P_N=26.4 kW
87 Hz: P_N=38.7 kW

n_N	1465 r/min		1765 r/min		2560 r/min		M_2 [Nm]	i		
f_N	50 Hz		60 Hz		87 Hz					
P_N	22.0 kW		26.4 kW		38.7 kW					
	n_2 [r/min]	c	n_2 [r/min]	c	n_2 [r/min]	c				
	64	0.9	77	0.9	112	0.9	3208	23.056	GST11-2M □□□180C32	218
	64	1.6	78	1.6	113	1.5	3169	22.778	GST14-2M □□□180C32	218
	60	1.5	72	1.5	105	1.5	3418	24.567	GST14-2M □□□180C32	218
	59	0.8	71	0.8			3469	24.933	GST11-2M □□□180C32	218
	53	1.4	63	1.4	92	1.3	3884	27.917	GST14-2M □□□180C32	218
	45	1.2	55	1.2	80	1.2	4489	32.267	GST14-2M □□□180C32	218
	40	1.1	48	1.1	70	1.1	5102	36.667	GST14-2M □□□180C32	218
	37	0.8	44	0.8			5507	40.185	GST14-3M □□□180C32	224
	37	1.0	45	1.0	66	1.0	5448	39.160	GST14-2M □□□180C32	218
	33	0.9	40	0.9	58	0.9	6191	44.500	GST14-2M □□□180C32	218

50 Hz: P_N=30.0 kW
60 Hz: P_N=36.0 kW
87 Hz: P_N=52.7 kW

n_N	1465 r/min		1765 r/min		2565 r/min		M_2 [Nm]	i		
f_N	50 Hz		60 Hz		87 Hz					
P_N	30.0 kW		36.0 kW		52.7 kW					
	n_2 [r/min]	c	n_2 [r/min]	c	n_2 [r/min]	c				
	939	0.9	1131	0.9			301	1.560	GST09-1M □□□180C42	212
	716	0.9	862	0.8			394	2.048	GST09-1M □□□180C42	212
	628	0.8					449	2.333	GST09-1M □□□180C42	212
	361	1.1	435	1.1			770	4.056	GST09-2M □□□180C42	218
	361	1.9	435	1.8			770	4.056	GST11-2M □□□180C42	218
	329	1.1	396	1.0			846	4.457	GST09-2M □□□180C42	218
	329	1.9	396	1.8			846	4.457	GST11-2M □□□180C42	218
	282	2.3	339	2.2			987	5.200	GST14-2M □□□180C42	218
	275	1.0	332	0.9			1010	5.324	GST09-2M □□□180C42	218
	275	1.6	332	1.5			1010	5.324	GST11-2M □□□180C42	218
	256	2.3	309	2.2			1084	5.714	GST14-2M □□□180C42	218
	250	0.9	302	0.9			1110	5.850	GST09-2M □□□180C42	218
	250	1.6	302	1.5			1110	5.850	GST11-2M □□□180C42	218
	233	2.3	281	2.2			1193	6.286	GST14-2M □□□180C42	218
	229	1.5	276	1.4			1214	6.400	GST11-2M □□□180C42	218
	220	0.8					1265	6.667	GST09-2M □□□180C42	218
	213	1.6	257	1.5			1302	6.864	GST11-2M □□□180C42	218
	188	1.4	226	1.4			1480	7.800	GST11-2M □□□180C42	218
	183	2.1	220	2.0			1523	8.027	GST14-2M □□□180C42	218
	167	2.2	201	2.1			1670	8.800	GST14-2M □□□180C42	218
	163	1.3	196	1.3			1709	9.010	GST11-2M □□□180C42	218
	149	1.2	179	1.2			1870	9.856	GST11-2M □□□180C42	218
	149	1.9	179	1.8			1867	9.841	GST14-2M □□□180C42	218
	133	1.9	161	1.8			2087	11.000	GST14-2M □□□180C42	218
	131	1.1	158	1.1			2125	11.200	GST11-2M □□□180C42	218
	119	1.8	143	1.7			2345	12.362	GST14-2M □□□180C42	218
	117	1.1	140	1.0			2385	12.571	GST11-2M □□□180C42	218
	104	1.6	126	1.5			2665	14.048	GST14-2M □□□180C42	218
	103	1.0	124	0.9			2710	14.286	GST11-2M □□□180C42	218
	97	1.6	117	1.6			2875	15.156	GST14-2M □□□180C42	218
	95	0.9	115	0.9			2922	15.400	GST11-2M □□□180C42	218
	85	1.4	103	1.4			3268	17.222	GST14-2M □□□180C42	218
	84	0.8	101	0.8			3320	17.500	GST11-2M □□□180C42	218
	73	1.3	88	1.3			3803	20.044	GST14-2M □□□180C42	218
	64	1.2	78	1.2			4322	22.778	GST14-2M □□□180C42	218
	60	1.1	72	1.1			4661	24.567	GST14-2M □□□180C42	218
	53	1.0	63	1.0			5297	27.917	GST14-2M □□□180C42	218
	45	0.9	55	0.9			6122	32.267	GST14-2M □□□180C42	218
	40	0.8	48	0.8			6957	36.667	GST14-2M □□□180C42	218

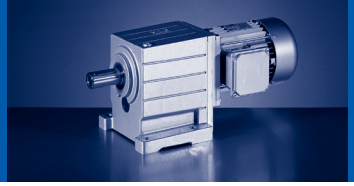

50 Hz: P_N=37.0 kW
60 Hz: P_N=45.0 kW

n_N	1475 r/min		1770 r/min				M_2 [Nm]	i		
f_N	50 Hz		60 Hz							
P_N	37.0 kW		45.0 kW							
	n_2 [r/min]	c	n_2 [r/min]	c						
	364	1.6	436	1.5			943	4.056	GST11-2M □□□225C12	218
	349	2.8	419	2.6			982	4.225	GST14-2M □□□225C12	218
	331	1.6	397	1.5			1036	4.457	GST11-2M □□□225C12	218
	318	2.7	381	2.6			1079	4.643	GST14-2M □□□225C12	218
	284	2.5	340	2.4			1209	5.200	GST14-2M □□□225C12	218
	277	1.3	333	1.2			1237	5.324	GST11-2M □□□225C12	218
	258	2.5	310	2.3			1328	5.714	GST14-2M □□□225C12	218
	252	1.3	303	1.2			1360	5.850	GST11-2M □□□225C12	218
	235	2.3	282	2.2			1461	6.286	GST14-2M □□□225C12	218
	231	1.2	277	1.2			1487	6.400	GST11-2M □□□225C12	218
	215	1.3	258	1.2			1595	6.864	GST11-2M □□□225C12	218
	206	2.1	248	2.0			1662	7.150	GST14-2M □□□225C12	218
	189	1.2	227	1.1			1813	7.800	GST11-2M □□□225C12	218
	184	2.0	221	1.9			1866	8.027	GST14-2M □□□225C12	218
	168	1.8	201	1.7			2045	8.800	GST14-2M □□□225C12	218
	164	1.1	197	1.0			2094	9.010	GST11-2M □□□225C12	218
	150	1.0	180	1.0			2291	9.856	GST11-2M □□□225C12	218
	150	1.7	180	1.6			2287	9.841	GST14-2M □□□225C12	218
	134	1.5	161	1.5			2557	11.000	GST14-2M □□□225C12	218
	132	0.9	158	0.9			2603	11.200	GST11-2M □□□225C12	218
	119	1.5	143	1.4			2873	12.362	GST14-2M □□□225C12	218
	117	0.9	141	0.8			2922	12.571	GST11-2M □□□225C12	218
	105	1.3	126	1.2			3265	14.048	GST14-2M □□□225C12	218
	97	1.3	117	1.3			3522	15.156	GST14-2M □□□225C12	218
	86	1.1	103	1.1			4003	17.222	GST14-2M □□□225C12	218
	74	1.1	88	1.1			4659	20.044	GST14-2M □□□225C12	218
	65	1.0	78	1.0			5294	22.778	GST14-2M □□□225C12	218

50 Hz: P_N=45.0 kW
60 Hz: P_N=54.0 kW

n_N	1480 r/min		1775 r/min				M_2 [Nm]	i		
f_N	50 Hz		60 Hz							
P_N	45.0 kW		54.0 kW							
	n_2 [r/min]	c	n_2 [r/min]	c						
	365	1.3	438	1.2			1143	4.056	GST11-2M □□□225C22	218
	350	2.3	420	2.2			1190	4.225	GST14-2M □□□225C22	218
	332	1.3	399	1.2			1256	4.457	GST11-2M □□□225C22	218
	319	2.2	383	2.1			1308	4.643	GST14-2M □□□225C22	218
	285	2.1	342	2.0			1465	5.200	GST14-2M □□□225C22	218
	278	1.1	334	1.0			1500	5.324	GST11-2M □□□225C22	218
	259	2.0	311	1.9			1610	5.714	GST14-2M □□□225C22	218
	253	1.1	304	1.0			1648	5.850	GST11-2M □□□225C22	218
	236	1.9	283	1.8			1771	6.286	GST14-2M □□□225C22	218
	231	1.0	278	0.9			1803	6.400	GST11-2M □□□225C22	218
	216	1.1	259	1.0			1934	6.864	GST11-2M □□□225C22	218
	207	1.7	248	1.6			2014	7.150	GST14-2M □□□225C22	218
	190	1.0	228	0.9			2197	7.800	GST11-2M □□□225C22	218
	184	1.7	221	1.6			2261	8.027	GST14-2M □□□225C22	218
	168	1.5	202	1.4			2479	8.800	GST14-2M □□□225C22	218
	164	0.9	197	0.8			2538	9.010	GST11-2M □□□225C22	218
	150	0.8					2777	9.856	GST11-2M □□□225C22	218
	150	1.4	181	1.3			2772	9.841	GST14-2M □□□225C22	218
	135	1.3	162	1.2			3099	11.000	GST14-2M □□□225C22	218
	120	1.2	144	1.1			3482	12.362	GST14-2M □□□225C22	218
	105	1.1	126	1.0			3957	14.048	GST14-2M □□□225C22	218
	98	1.1	117	1.1			4269	15.156	GST14-2M □□□225C22	218
	86	0.9	103	0.9			4852	17.222	GST14-2M □□□225C22	218
	74	0.9	89	0.9			5647	20.044	GST14-2M □□□225C22	218

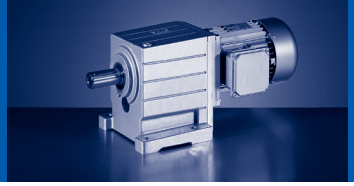

50 Hz: P_N=0.75 kW
60 Hz: P_N=0.92 kW
87 Hz: P_N=1.35 kW

n_N	1410 r/min		1710 r/min		2520 r/min		M_2 [Nm]	i		
f_N	50 Hz		60 Hz		87 Hz					
P_N	0.75 kW		0.92 kW		1.35 kW					
	n_2 [r/min]	c	n_2 [r/min]	c	n_2 [r/min]	c				
	881	2.4	1069	2.3	1575	2.0	8.0	1.600	GST04-1M □□□080C32	230
	689	2.2	835	2.1	1231	1.9	10	2.048	GST04-1M □□□080C32	230
	630	2.2	763	2.1	1125	1.9	11	2.240	GST04-1M □□□080C32	230
	494	1.8	599	1.7	882	1.5	14	2.857	GST04-1M □□□080C32	230
	477	2.7	579	2.6	853	2.3	15	2.956	GST04-2M □□□080C32	236
	423	2.5	513	2.4	756	2.1	16	3.333	GST04-2M □□□080C32	236
	403	1.4	489	1.4	720	1.2	18	3.500	GST04-1M □□□080C32	230
	403	3.1	489	3.0	720	2.6	18	3.500	GST05-1M □□□080C32	230
	348	2.3	422	2.2	622	1.9	20	4.053	GST04-2M □□□080C32	236
	321	1.1	389	1.1	573	1.0	22	4.400	GST04-1M □□□080C32	230
	310	2.4	375	2.3	553	2.0	23	4.556	GST05-1M □□□080C32	230
	308	2.1	374	2.0	551	1.8	23	4.571	GST04-2M □□□080C32	236
	272	2.0	330	1.9	486	1.7	26	5.187	GST04-2M □□□080C32	236
	249	0.9	302	0.8			28	5.667	GST04-1M □□□080C32	230
	249	1.9	302	1.8	445	1.6	28	5.667	GST05-1M □□□080C32	230
	249	2.9	302	2.8	445	2.4	28	5.667	GST06-1M □□□080C32	230
	241	1.9	292	1.8	431	1.6	29	5.850	GST04-2M □□□080C32	236
	220	1.8	267	1.7	394	1.5	32	6.400	GST04-2M □□□080C32	236
	200	1.6	243	1.6	358	1.4	35	7.040	GST04-2M □□□080C32	236
	195	3.0	236	2.9	348	2.6	36	7.238	GST05-2M □□□080C32	236
	192	1.3	233	1.2	344	1.1	37	7.333	GST05-1M □□□080C32	230
	192	2.6	233	2.5	344	2.2	37	7.333	GST06-1M □□□080C32	230
	192	2.9	233	2.8	344	2.4	37	7.333	GST07-1M □□□080C32	230
	176	1.5	214	1.4	315	1.3	39	8.000	GST04-2M □□□080C32	236
	173	2.9	210	2.7	309	2.4	40	8.163	GST05-2M □□□080C32	236
	158	1.0	192	0.9			45	8.900	GST05-1M □□□080C32	230
	158	1.9	192	1.8	283	1.6	45	8.900	GST06-1M □□□080C32	230
	158	2.5	192	2.4	283	2.1	45	8.900	GST07-1M □□□080C32	230
	157	1.4	190	1.4	280	1.2	44	9.010	GST04-2M □□□080C32	236
	157	2.7	190	2.6	280	2.3	44	9.010	GST05-2M □□□080C32	236
	143	1.3	174	1.3	256	1.1	49	9.856	GST04-2M □□□080C32	236
	141	2.5	171	2.4	252	2.1	49	10.000	GST05-2M □□□080C32	236
	126	1.1	153	1.0	225	0.9	55	11.200	GST04-2M □□□080C32	236
	126	2.3	153	2.2	225	1.9	55	11.200	GST05-2M □□□080C32	236
	125	1.1	152	1.1	224	0.9	56	11.250	GST06-1M □□□080C32	230
	125	2.0	152	1.9	224	1.7	56	11.250	GST07-1M □□□080C32	230
	112	1.1	136	1.1	201	0.9	62	12.571	GST04-2M □□□080C32	236
	108	2.1	131	2.1	194	1.8	64	13.016	GST05-2M □□□080C32	236
	99	0.9	120	0.8			70	14.286	GST04-2M □□□080C32	236
	98	2.0	119	1.9	176	1.7	71	14.356	GST05-2M □□□080C32	236
	92	0.9	111	0.9	164	0.9	76	15.400	GST04-2M □□□080C32	236

50 Hz: P_N=0.75 kW
60 Hz: P_N=0.92 kW
87 Hz: P_N=1.35 kW

n_N	1410 r/min		1710 r/min		2520 r/min		M_2 [Nm]	i		
f_N	50 Hz		60 Hz		87 Hz					
P_N	0.75 kW		0.92 kW		1.35 kW					
	n_2 [r/min]	c	n_2 [r/min]	c	n_2 [r/min]	c				
	87	1.9	106	1.9	156	1.8	80	16.190	GST05-2M □□□080C32	236
	81	1.7	98	1.7	144	1.6	86	17.500	GST05-2M □□□080C32	236
	70	1.6	85	1.6	126	1.5	99	20.044	GST05-2M □□□080C32	236
	62	1.3	75	1.3	111	1.2	112	22.778	GST05-2M □□□080C32	236
	62	2.8	75	2.8	111	2.7	112	22.778	GST06-2M □□□080C32	236
	57	1.3	69	1.3	101	1.3	123	24.933	GST05-2M □□□080C32	236
	57	2.9	69	2.9	101	2.8	123	24.933	GST06-2M □□□080C32	236
	50	1.1	60	1.1	89	1.0	140	28.333	GST05-2M □□□080C32	236
	50	2.3	60	2.3	89	2.2	140	28.333	GST06-2M □□□080C32	236
	44	1.0	53	1.0	78	1.0	159	32.267	GST05-2M □□□080C32	236
	44	2.3	53	2.3	78	2.2	159	32.267	GST06-2M □□□080C32	236
	44	2.9	53	2.9	78	2.8	159	32.267	GST07-2M □□□080C32	236
	39	0.8	47	0.8			181	36.667	GST05-2M □□□080C32	236
	39	1.8	47	1.8	69	1.7	181	36.667	GST06-2M □□□080C32	236
	39	2.9	47	2.9	69	2.8	181	36.667	GST07-2M □□□080C32	236
	36	0.9	44	0.9	64	0.8	193	39.160	GST05-2M □□□080C32	236
	36	1.7	44	1.7	64	1.6	190	39.200	GST06-3M □□□080C32	242
	36	1.9	44	1.9	64	1.8	193	39.160	GST06-2M □□□080C32	236
	36	2.5	44	2.5	64	2.4	193	39.160	GST07-2M □□□080C32	236
	32	1.5	38	1.5	57	1.5	219	44.500	GST06-2M □□□080C32	236
	32	1.6	39	1.6	57	1.6	214	44.000	GST06-3M □□□080C32	242
	32	2.5	38	2.5	57	2.5	219	44.500	GST07-2M □□□080C32	236
	29	1.1	35	1.1	51	1.1	244	49.500	GST06-2M □□□080C32	236
	29	2.0	35	2.0	51	2.0	244	49.500	GST07-2M □□□080C32	236
	28	1.3	34	1.3	49	1.3	248	51.022	GST06-3M □□□080C32	242
	28	2.8	34	2.8	49	2.8	248	51.022	GST07-3M □□□080C32	242
	26	1.3	32	1.3	47	1.3	262	53.900	GST06-3M □□□080C32	242
	26	2.7	32	2.7	47	2.7	262	53.900	GST07-3M □□□080C32	242
	25	1.1	30	1.1	45	1.1	277	56.250	GST06-2M □□□080C32	236
	25	2.0	30	2.0	45	2.0	277	56.250	GST07-2M □□□080C32	236
	22	2.2	26	2.2	39	2.2	316	65.079	GST07-3M □□□080C32	242
	21	1.1	25	1.1	37	1.1	329	67.760	GST06-3M □□□080C32	242
	20	1.1	24	1.1	36	1.1	341	70.156	GST06-3M □□□080C32	242
	20	2.1	24	2.1	36	2.1	341	70.156	GST07-3M □□□080C32	242
	18	1.8	21	1.8	32	1.8	387	79.762	GST07-3M □□□080C32	242
	17	0.9	21	0.9	31	0.9	393	80.952	GST06-3M □□□080C32	242
	16	0.9	20	0.9	29	0.9	424	87.267	GST06-3M □□□080C32	242
	16	1.7	20	1.7	29	1.7	417	85.983	GST07-3M □□□080C32	242
	14	1.5	18	1.5	26	1.5	474	97.708	GST07-3M □□□080C32	242
	13	1.3	15	1.3	23	1.3	543	111.915	GST07-3M □□□080C32	242
	12	2.9	15	2.9	22	2.9	551	113.585	GST09-3M □□□080C32	242

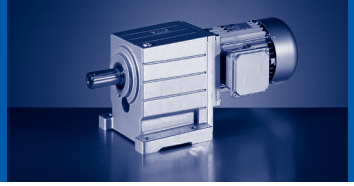

50 Hz: P_N=0.75 kW
60 Hz: P_N=0.92 kW
87 Hz: P_N=1.35 kW

n_N	1410 r/min		1710 r/min		2520 r/min		M_2 [Nm]	i		
f_N	50 Hz		60 Hz		87 Hz					
P_N	0.75 kW		0.92 kW		1.35 kW					
	n_2 [r/min]	c	n_2 [r/min]	c	n_2 [r/min]	c				
	11	1.2	13	1.2	20	1.2	617	127.176	GST07-3M □□□080C32	242
	11	2.6	13	2.6	20	2.6	627	129.074	GST09-3M □□□080C32	242
	10	1.0	12	1.0	18	1.0	676	139.211	GST07-3M □□□080C32	242
	10	2.4	12	2.4	18	2.4	686	141.289	GST09-3M □□□080C32	242
	8.9	0.9	11	0.9	16	0.9	768	158.194	GST07-3M □□□080C32	242
	8.8	2.1	11	2.1	16	2.1	779	160.556	GST09-3M □□□080C32	242
	7.8	0.8	9.5	0.8	14	0.8	875	180.156	GST07-3M □□□080C32	242
	7.7	1.8	9.4	1.8	14	1.8	888	182.844	GST09-3M □□□080C32	242
	6.8	1.6	8.2	1.6	12	1.6	1009	207.778	GST09-3M □□□080C32	242
	6.8	2.8	8.2	2.8	12	2.8	1009	207.778	GST11-3M □□□080C32	242
	6	1.4	7.2	1.4	11	1.4	1149	236.622	GST09-3M □□□080C32	242
	6	2.4	7.2	2.4	11	2.4	1149	236.622	GST11-3M □□□080C32	242
	5.6	1.3	6.8	1.3	10	1.3	1224	252.167	GST09-3M □□□080C32	242
	5.6	2.3	6.8	2.3	10	2.3	1224	252.167	GST11-3M □□□080C32	242
	5.2	1.2	6.4	1.2	9.4	1.2	1305	268.889	GST09-3M □□□080C32	242
	5.2	2.2	6.4	2.2	9.4	2.2	1305	268.889	GST11-3M □□□080C32	242
	4.3	1.0	5.2	1.0	7.7	1.0	1584	326.333	GST09-3M □□□080C32	242
	4.3	1.8	5.2	1.8	7.7	1.8	1584	326.333	GST11-3M □□□080C32	242
	3.9	0.9	4.7	0.9	6.9	0.9	1762	363.000	GST09-3M □□□080C32	242
	3.9	1.5	4.7	1.5	6.9	1.5	1762	363.000	GST11-3M □□□080C32	242
	3.4	0.8	4.2	0.8	6.1	0.8	2002	412.500	GST09-3M □□□080C32	242
	3.4	1.4	4.2	1.4	6.1	1.4	2002	412.500	GST11-3M □□□080C32	242

50 Hz: P_N=1.1 kW
60 Hz: P_N=1.3 kW
87 Hz: P_N=2.0 kW

n_N	1430 r/min		1730 r/min		2540 r/min		M_2 [Nm]	i		
f_N	50 Hz		60 Hz		87 Hz					
P_N	1.1 kW		1.3 kW		2.0 kW					
	n_2 [r/min]	c	n_2 [r/min]	c	n_2 [r/min]	c				
	894	1.7	1081	1.6	1588	1.4	12	1.600	GST04-1M □□□090C12	230
	698	1.5	845	1.5	1241	1.3	15	2.048	GST04-1M □□□090C12	230
	638	1.5	772	1.5	1134	1.3	16	2.240	GST04-1M □□□090C12	230
	501	1.2	606	1.2	889	1.0	21	2.857	GST04-1M □□□090C12	230
	501	2.6	606	2.4	889	2.2	21	2.857	GST05-1M □□□090C12	230
	484	1.9	585	1.8	859	1.6	21	2.956	GST04-2M □□□090C12	236
	484	3.0	585	2.9	859	2.5	21	2.956	GST05-2M □□□090C12	236
	429	1.8	519	1.7	762	1.5	24	3.333	GST04-2M □□□090C12	236
	409	1.0	494	0.9	726	0.8	25	3.500	GST04-1M □□□090C12	230
	409	2.1	494	2.0	726	1.8	25	3.500	GST05-1M □□□090C12	230
	353	1.6	427	1.5	627	1.3	29	4.053	GST04-2M □□□090C12	236
	353	2.8	427	2.7	627	2.4	29	4.053	GST05-2M □□□090C12	236
	314	1.6	380	1.6	558	1.4	33	4.556	GST05-1M □□□090C12	230
	314	3.2	380	3.0	558	2.7	33	4.556	GST06-1M □□□090C12	230
	313	1.5	378	1.4	556	1.2	33	4.571	GST04-2M □□□090C12	236
	313	2.8	378	2.7	556	2.4	33	4.571	GST05-2M □□□090C12	236
	276	1.4	334	1.3	490	1.1	37	5.187	GST04-2M □□□090C12	236
	276	2.4	334	2.3	490	2.0	37	5.187	GST05-2M □□□090C12	236
	252	1.3	305	1.3	448	1.1	41	5.667	GST05-1M □□□090C12	230
	252	2.6	305	2.4	448	2.2	41	5.667	GST06-1M □□□090C12	230
	244	1.3	296	1.2	434	1.1	42	5.850	GST04-2M □□□090C12	236
	244	2.4	296	2.3	434	2.0	42	5.850	GST05-2M □□□090C12	236
	223	1.2	270	1.2	397	1.0	46	6.400	GST04-2M □□□090C12	236
	223	2.3	270	2.2	397	1.9	46	6.400	GST05-2M □□□090C12	236
	203	1.1	246	1.1	361	1.0	50	7.040	GST04-2M □□□090C12	236
	198	2.1	239	2.0	351	1.8	52	7.238	GST05-2M □□□090C12	236
	195	1.9	236	1.8	346	1.6	53	7.333	GST06-1M □□□090C12	230
	179	1.0	216	1.0	318	0.9	57	8.000	GST04-2M □□□090C12	236
	175	2.0	212	1.9	311	1.7	58	8.163	GST05-2M □□□090C12	236
	161	1.3	194	1.3	285	1.1	64	8.900	GST06-1M □□□090C12	230
	161	2.8	194	2.6	285	2.3	64	8.900	GST07-1M □□□090C12	230
	159	1.0	192	0.9	282	0.8	64	9.010	GST04-2M □□□090C12	236
	159	1.9	192	1.8	282	1.6	64	9.010	GST05-2M □□□090C12	236
	145	0.9	176	0.9			70	9.856	GST04-2M □□□090C12	236
	143	1.7	173	1.7	254	1.5	71	10.000	GST05-2M □□□090C12	236
	128	1.6	155	1.5	227	1.3	80	11.200	GST05-2M □□□090C12	236
	127	1.7	154	1.6	226	1.4	81	11.250	GST07-1M □□□090C12	230
	127	2.7	154	2.6	226	2.2	81	11.250	GST09-1M □□□090C12	230
	110	1.5	133	1.4	195	1.2	93	13.016	GST05-2M □□□090C12	236
	100	1.4	121	1.3	177	1.2	102	14.356	GST05-2M □□□090C12	236
	100	3.0	121	2.9	178	2.5	102	14.286	GST06-2M □□□090C12	236

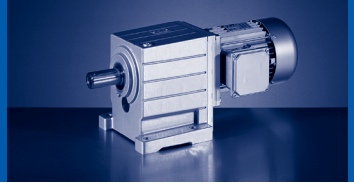

50 Hz: P_N=1.1 kW
60 Hz: P_N=1.3 kW
87 Hz: P_N=2.0 kW

n_N	1430 r/min		1730 r/min		2540 r/min		M_2 [Nm]	i		
f_N	50 Hz		60 Hz		87 Hz					
P_N	1.1 kW		1.3 kW		2.0 kW					
	n_2 [r/min]	c	n_2 [r/min]	c	n_2 [r/min]	c				
	93	2.9	112	2.9	165	2.8	110	15.400	GST06-2M □□□090C12	236
	88	1.3	107	1.3	157	1.2	115	16.190	GST05-2M □□□090C12	236
	82	1.1	99	1.1	145	1.1	125	17.500	GST05-2M □□□090C12	236
	82	2.5	99	2.5	145	2.4	125	17.500	GST06-2M □□□090C12	236
	71	1.1	86	1.1	127	1.1	143	20.044	GST05-2M □□□090C12	236
	71	2.5	86	2.5	127	2.3	143	20.044	GST06-2M □□□090C12	236
	63	0.9	76	0.9	112	0.9	162	22.778	GST05-2M □□□090C12	236
	63	1.9	76	1.9	112	1.9	162	22.778	GST06-2M □□□090C12	236
	57	0.9	69	0.9	102	0.9	178	24.933	GST05-2M □□□090C12	236
	57	2.0	69	2.0	102	1.9	178	24.933	GST06-2M □□□090C12	236
	51	1.6	61	1.6	90	1.5	202	28.333	GST06-2M □□□090C12	236
	44	1.6	54	1.6	79	1.5	230	32.267	GST06-2M □□□090C12	236
	44	3.1	54	3.1	79	2.9	230	32.267	GST07-2M □□□090C12	236
	39	1.2	47	1.2	69	1.2	261	36.667	GST06-2M □□□090C12	236
	39	2.7	47	2.7	69	2.6	261	36.667	GST07-2M □□□090C12	236
	37	1.2	44	1.2	65	1.1	275	39.200	GST06-3M □□□090C12	242
	37	1.3	44	1.3	65	1.3	279	39.160	GST06-2M □□□090C12	236
	37	2.5	44	2.5	65	2.4	275	39.200	GST07-3M □□□090C12	242
	37	2.5	44	2.5	65	2.4	279	39.160	GST07-2M □□□090C12	236
	33	1.1	39	1.1	58	1.1	309	44.000	GST06-3M □□□090C12	242
	33	2.3	39	2.3	58	2.3	309	44.000	GST07-3M □□□090C12	242
	32	1.0	39	1.0	57	1.0	317	44.500	GST06-2M □□□090C12	236
	32	2.2	39	2.2	57	2.2	317	44.500	GST07-2M □□□090C12	236
	29	1.7	35	1.7	51	1.7	353	49.500	GST07-2M □□□090C12	236
	29	2.7	35	2.7	51	2.7	353	49.500	GST09-2M □□□090C12	236
	28	0.9	34	0.9	50	0.9	358	51.022	GST06-3M □□□090C12	242
	28	2.0	34	2.0	50	2.0	358	51.022	GST07-3M □□□090C12	242
	27	0.9	32	0.9	47	0.9	378	53.900	GST06-3M □□□090C12	242
	27	1.9	32	1.9	47	1.9	378	53.900	GST07-3M □□□090C12	242
	25	1.7	31	1.7	45	1.7	401	56.250	GST07-2M □□□090C12	236
	25	2.7	31	2.7	45	2.7	401	56.250	GST09-2M □□□090C12	236
	22	1.6	27	1.6	39	1.6	457	65.079	GST07-3M □□□090C12	242
	20	1.4	25	1.4	36	1.4	493	70.156	GST07-3M □□□090C12	242
	20	2.9	24	2.9	35	2.9	505	71.867	GST09-3M □□□090C12	242
	18	1.3	22	1.3	32	1.3	560	79.762	GST07-3M □□□090C12	242
	18	2.8	21	2.8	31	2.8	573	81.667	GST09-3M □□□090C12	242
	17	1.2	20	1.2	30	1.2	604	85.983	GST07-3M □□□090C12	242
	15	1.0	18	1.0	26	1.0	686	97.708	GST07-3M □□□090C12	242
	15	2.5	19	2.5	27	2.5	657	93.541	GST09-3M □□□090C12	242
	14	2.3	17	2.3	26	2.3	696	99.167	GST09-3M □□□090C12	242
	13	0.9	16	0.9	23	0.9	786	111.915	GST07-3M □□□090C12	242

50 Hz: P_N=1.1 kW
60 Hz: P_N=1.3 kW
87 Hz: P_N=2.0 kW

n_N	1430 r/min		1730 r/min		2540 r/min		M_2 [Nm]	i		
f_N	50 Hz		60 Hz		87 Hz					
P_N	1.1 kW		1.3 kW		2.0 kW					
	n_2 [r/min]	c	n_2 [r/min]	c	n_2 [r/min]	c				
	13	2.0	15	2.0	22	2.0	797	113.585	GST09-3M □□□090C12	242
	11	1.8	13	1.8	20	1.8	906	129.074	GST09-3M □□□090C12	242
	11	3.1	13	3.1	20	3.1	906	129.074	GST11-3M □□□090C12	242
	10	1.6	12	1.6	18	1.6	992	141.289	GST09-3M □□□090C12	242
	9.7	2.6	12	2.6	17	2.6	1032	146.993	GST11-3M □□□090C12	242
	9	2.5	11	2.5	16	2.5	1111	158.194	GST11-3M □□□090C12	242
	8.9	1.4	11	1.4	16	1.4	1127	160.556	GST09-3M □□□090C12	242
	7.9	2.1	9.6	2.1	14	2.1	1265	180.156	GST11-3M □□□090C12	242
	7.8	1.3	9.5	1.3	14	1.3	1284	182.844	GST09-3M □□□090C12	242
	6.9	1.1	8.3	1.1	12	1.1	1459	207.778	GST09-3M □□□090C12	242
	6.9	1.9	8.3	1.9	12	1.9	1459	207.778	GST11-3M □□□090C12	242
	6	1.0	7.3	1.0	11	1.0	1661	236.622	GST09-3M □□□090C12	242
	6	1.6	7.3	1.6	11	1.6	1661	236.622	GST11-3M □□□090C12	242
	5.7	0.9	6.9	0.9	10	0.9	1770	252.167	GST09-3M □□□090C12	242
	5.7	1.6	6.9	1.6	10	1.6	1770	252.167	GST11-3M □□□090C12	242
	5.3	0.9	6.4	0.9	9.5	0.9	1888	268.889	GST09-3M □□□090C12	242
	5.3	1.5	6.4	1.5	9.5	1.5	1888	268.889	GST11-3M □□□090C12	242
	5.3	3.1	6.4	3.1	9.5	3.1	1888	268.889	GST14-3M □□□090C12	242
	4.4	1.2	5.3	1.2	7.8	1.2	2291	326.333	GST11-3M □□□090C12	242
	4.4	2.6	5.3	2.6	7.8	2.6	2291	326.333	GST14-3M □□□090C12	242
	3.9	1.1	4.8	1.1	7	1.1	2548	363.000	GST11-3M □□□090C12	242
	3.9	2.3	4.8	2.3	7	2.3	2548	363.000	GST14-3M □□□090C12	242
	3.5	1.0	4.2	1.0	6.2	1.0	2896	412.500	GST11-3M □□□090C12	242
	3.5	2.0	4.2	2.0	6.2	2.0	2896	412.500	GST14-3M □□□090C12	242

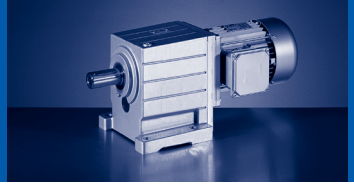

50 Hz: P_N=1.5 kW
60 Hz: P_N=1.8 kW
87 Hz: P_N=2.7 kW

n_N	1435 r/min		1735 r/min		2545 r/min		M_2 [Nm]	i		
f_N	50 Hz		60 Hz		87 Hz					
P_N	1.5 kW		1.8 kW		2.7 kW					
	n_2 [r/min]	c	n_2 [r/min]	c	n_2 [r/min]	c				
	897	1.2	1084	1.2	1591	1.0	16	1.600	GST04-1M □□□090C32	230
	897	2.8	1084	2.7	1591	2.4	16	1.600	GST05-1M □□□090C32	230
	701	1.1	847	1.1	1243	1.0	20	2.048	GST04-1M □□□090C32	230
	701	2.6	847	2.5	1243	2.2	20	2.048	GST05-1M □□□090C32	230
	641	1.1	775	1.1	1136	0.9	22	2.240	GST04-1M □□□090C32	230
	641	2.4	775	2.3	1136	2.0	22	2.240	GST05-1M □□□090C32	230
	502	0.9	607	0.9			28	2.857	GST04-1M □□□090C32	230
	502	1.9	607	1.8	891	1.6	28	2.857	GST05-1M □□□090C32	230
	486	1.4	587	1.3	861	1.2	29	2.956	GST04-2M □□□090C32	236
	486	2.2	587	2.1	861	1.9	29	2.956	GST05-2M □□□090C32	236
	431	1.3	521	1.2	764	1.1	32	3.333	GST04-2M □□□090C32	236
	431	2.4	521	2.3	764	2.0	32	3.333	GST05-2M □□□090C32	236
	410	1.6	496	1.5	727	1.3	34	3.500	GST05-1M □□□090C32	230
	410	3.0	496	2.9	727	2.6	34	3.500	GST06-1M □□□090C32	230
	354	1.2	428	1.1	628	1.0	39	4.053	GST04-2M □□□090C32	236
	354	2.1	428	2.0	628	1.7	39	4.053	GST05-2M □□□090C32	236
	315	1.2	381	1.2	559	1.0	45	4.556	GST05-1M □□□090C32	230
	315	2.3	381	2.2	559	2.0	45	4.556	GST06-1M □□□090C32	230
	314	1.1	380	1.0	557	0.9	44	4.571	GST04-2M □□□090C32	236
	314	2.1	380	2.0	557	1.7	44	4.571	GST05-2M □□□090C32	236
	277	1.0	335	1.0	491	0.8	50	5.187	GST04-2M □□□090C32	236
	277	1.8	335	1.7	491	1.5	50	5.187	GST05-2M □□□090C32	236
	257	2.9	311	2.8	456	2.5	55	5.583	GST07-1M □□□090C32	230
	253	1.0	306	0.9	449	0.8	56	5.667	GST05-1M □□□090C32	230
	253	1.9	306	1.8	449	1.6	56	5.667	GST06-1M □□□090C32	230
	245	0.9	297	0.9			57	5.850	GST04-2M □□□090C32	236
	245	1.8	297	1.7	435	1.5	57	5.850	GST05-2M □□□090C32	236
	224	0.9	271	0.9			62	6.400	GST04-2M □□□090C32	236
	224	1.7	271	1.6	398	1.4	62	6.400	GST05-2M □□□090C32	236
	204	0.8					68	7.040	GST04-2M □□□090C32	236
	198	1.5	240	1.5	352	1.3	70	7.238	GST05-2M □□□090C32	236
	196	1.4	237	1.3	347	1.2	72	7.333	GST06-1M □□□090C32	230
	196	2.4	237	2.3	347	2.0	72	7.333	GST07-1M □□□090C32	230
	196	2.9	237	2.8	347	2.5	72	7.333	GST09-1M □□□090C32	230
	176	1.5	213	1.4	312	1.2	79	8.163	GST05-2M □□□090C32	236
	176	3.2	213	3.0	312	2.7	79	8.163	GST06-2M □□□090C32	236
	161	1.0	195	0.9	286	0.8	88	8.900	GST06-1M □□□090C32	230
	161	2.0	195	1.9	286	1.7	88	8.900	GST07-1M □□□090C32	230
	161	2.6	195	2.4	286	2.1	88	8.900	GST09-1M □□□090C32	230
	159	1.4	193	1.3	283	1.1	87	9.010	GST05-2M □□□090C32	236
	159	3.0	193	2.9	283	2.5	87	9.010	GST06-2M □□□090C32	236

50 Hz: P_N=1.5 kW
60 Hz: P_N=1.8 kW
87 Hz: P_N=2.7 kW

n_N	1435 r/min		1735 r/min		2545 r/min		M_2 [Nm]	i		
f_N	50 Hz		60 Hz		87 Hz					
P_N	1.5 kW		1.8 kW		2.7 kW					
	n_2 [r/min]	c	n_2 [r/min]	c	n_2 [r/min]	c				
	144	1.3	174	1.2	255	1.1	97	10.000	GST05-2M □□□090C32	236
	144	2.8	174	2.7	255	2.3	97	10.000	GST06-2M □□□090C32	236
	128	1.2	155	1.1	227	1.0	109	11.200	GST05-2M □□□090C32	236
	128	1.2	154	1.2	226	1.0	111	11.250	GST07-1M □□□090C32	230
	128	2.0	154	1.9	226	1.7	111	11.250	GST09-1M □□□090C32	230
	128	2.6	155	2.5	227	2.2	109	11.200	GST06-2M □□□090C32	236
	114	2.4	138	2.3	202	2.0	122	12.571	GST06-2M □□□090C32	236
	110	1.1	133	1.0	196	0.9	126	13.016	GST05-2M □□□090C32	236
	100	1.0	121	1.0	177	0.8	139	14.356	GST05-2M □□□090C32	236
	100	2.2	121	2.1	178	1.9	138	14.286	GST06-2M □□□090C32	236
	93	2.1	113	2.1	165	2.0	149	15.400	GST06-2M □□□090C32	236
	89	1.0	107	1.0	157	0.9	157	16.190	GST05-2M □□□090C32	236
	82	0.8	99	0.8			170	17.500	GST05-2M □□□090C32	236
	82	1.9	99	1.9	145	1.8	170	17.500	GST06-2M □□□090C32	236
	72	0.8	87	0.8			194	20.044	GST05-2M □□□090C32	236
	72	1.8	87	1.8	127	1.7	194	20.044	GST06-2M □□□090C32	236
	63	1.4	76	1.4	112	1.4	221	22.778	GST06-2M □□□090C32	236
	63	3.1	76	3.1	112	3.0	221	22.778	GST07-2M □□□090C32	236
	58	1.5	70	1.5	102	1.4	242	24.933	GST06-2M □□□090C32	236
	58	2.9	71	2.9	104	2.8	238	24.567	GST07-2M □□□090C32	236
	51	1.2	61	1.2	90	1.1	274	28.333	GST06-2M □□□090C32	236
	51	2.6	62	2.6	91	2.4	270	27.917	GST07-2M □□□090C32	236
	45	1.2	54	1.2	79	1.1	313	32.267	GST06-2M □□□090C32	236
	45	2.3	54	2.3	79	2.2	313	32.267	GST07-2M □□□090C32	236
	45	2.9	54	2.9	79	2.8	313	32.267	GST09-2M □□□090C32	236
	39	0.9	47	0.9	69	0.9	355	36.667	GST06-2M □□□090C32	236
	39	2.0	47	2.0	69	1.9	355	36.667	GST07-2M □□□090C32	236
	39	2.9	47	2.9	69	2.8	355	36.667	GST09-2M □□□090C32	236
	37	0.9	44	0.9	65	0.8	374	39.200	GST06-3M □□□090C32	242
	37	1.0	44	1.0	65	0.9	379	39.160	GST06-2M □□□090C32	236
	37	1.9	44	1.9	65	1.8	379	39.160	GST07-2M □□□090C32	236
	37	1.9	44	1.9	65	1.8	374	39.200	GST07-3M □□□090C32	242
	37	2.6	44	2.6	65	2.4	379	39.160	GST09-2M □□□090C32	236
	33	1.7	39	1.7	58	1.7	420	44.000	GST07-3M □□□090C32	242
	33	3.1	40	3.1	59	3.1	413	43.267	GST09-3M □□□090C32	242
	32	1.6	39	1.6	57	1.6	431	44.500	GST07-2M □□□090C32	236
	32	2.6	39	2.6	57	2.6	431	44.500	GST09-2M □□□090C32	236
	29	1.3	35	1.3	51	1.3	479	49.500	GST07-2M □□□090C32	236
	29	2.0	35	2.0	51	2.0	479	49.500	GST09-2M □□□090C32	236
	29	3.1	35	3.1	52	3.1	469	49.167	GST09-3M □□□090C32	242
	28	1.4	34	1.4	50	1.4	487	51.022	GST07-3M □□□090C32	242

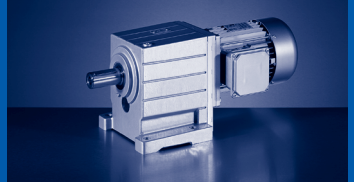

50 Hz: P_N=1.5 kW
60 Hz: P_N=1.8 kW
87 Hz: P_N=2.7 kW

n_N	1435 r/min		1735 r/min		2545 r/min		M_2 [Nm]	i		
f_N	50 Hz		60 Hz		87 Hz					
P_N	1.5 kW		1.8 kW		2.7 kW					
	n_2 [r/min]	c	n_2 [r/min]	c	n_2 [r/min]	c				
	27	1.4	32	1.4	47	1.4	514	53.900	GST07-3M □□□090C32	242
	27	2.7	33	2.7	48	2.7	506	53.044	GST09-3M □□□090C32	242
	26	1.3	31	1.3	45	1.3	545	56.250	GST07-2M □□□090C32	236
	26	2.0	31	2.0	45	2.0	545	56.250	GST09-2M □□□090C32	236
	24	2.7	29	2.7	42	2.7	575	60.278	GST09-3M □□□090C32	242
	22	1.1	27	1.1	39	1.1	621	65.079	GST07-3M □□□090C32	242
	21	1.1	25	1.1	36	1.1	669	70.156	GST07-3M □□□090C32	242
	20	2.2	24	2.2	35	2.2	686	71.867	GST09-3M □□□090C32	242
	18	0.9	22	0.9	32	0.9	761	79.762	GST07-3M □□□090C32	242
	18	2.0	21	2.0	31	2.0	779	81.667	GST09-3M □□□090C32	242
	17	0.9	20	0.9	30	0.9	820	85.983	GST07-3M □□□090C32	242
	15	1.7	18	1.7	26	1.7	946	99.167	GST09-3M □□□090C32	242
	15	1.8	19	1.8	27	1.8	892	93.541	GST09-3M □□□090C32	242
	13	1.5	15	1.5	22	1.5	1084	113.585	GST09-3M □□□090C32	242
	11	1.3	13	1.3	20	1.3	1231	129.074	GST09-3M □□□090C32	242
	11	2.3	13	2.3	20	2.3	1231	129.074	GST11-3M □□□090C32	242
	10	1.2	12	1.2	18	1.2	1348	141.289	GST09-3M □□□090C32	242
	9.8	1.9	12	1.9	17	1.9	1402	146.993	GST11-3M □□□090C32	242
	9.1	1.9	11	1.9	16	1.9	1509	158.194	GST11-3M □□□090C32	242
	8.9	1.1	11	1.1	16	1.1	1532	160.556	GST09-3M □□□090C32	242
	8	1.6	9.6	1.6	14	1.6	1719	180.156	GST11-3M □□□090C32	242
	7.9	0.9	9.5	0.9	14	0.9	1744	182.844	GST09-3M □□□090C32	242
	7	2.9	8.5	2.9	12	2.9	1953	204.722	GST14-3M □□□090C32	242
	6.9	0.8	8.4	0.8	12	0.8	1982	207.778	GST09-3M □□□090C32	242
	6.9	1.4	8.4	1.4	12	1.4	1982	207.778	GST11-3M □□□090C32	242
	6.1	1.2	7.3	1.2	11	1.2	2257	236.622	GST11-3M □□□090C32	242
	6.1	2.6	7.3	2.6	11	2.6	2257	236.622	GST14-3M □□□090C32	242
	5.8	2.5	7	2.5	10	2.5	2370	248.458	GST14-3M □□□090C32	242
	5.7	1.2	6.9	1.2	10	1.2	2406	252.167	GST11-3M □□□090C32	242
	5.3	1.1	6.5	1.1	9.5	1.1	2565	268.889	GST11-3M □□□090C32	242
	5.3	2.3	6.5	2.3	9.5	2.3	2565	268.889	GST14-3M □□□090C32	242
	4.4	0.9	5.3	0.9	7.8	0.9	3113	326.333	GST11-3M □□□090C32	242
	4.4	1.9	5.3	1.9	7.8	1.9	3113	326.333	GST14-3M □□□090C32	242
	4	1.7	4.8	1.7	7	1.7	3463	363.000	GST14-3M □□□090C32	242
	3.5	1.5	4.2	1.5	6.2	1.5	3935	412.500	GST14-3M □□□090C32	242

50 Hz: P_N=2.2 kW
60 Hz: P_N=2.6 kW
87 Hz: P_N=3.9 kW

n_N	1445 r/min		1745 r/min		2555 r/min		M_2 [Nm]	i		
f_N	50 Hz		60 Hz		87 Hz					
P_N	2.2 kW		2.6 kW		3.9 kW					
	n_2 [r/min]	c	n_2 [r/min]	c	n_2 [r/min]	c				
	903	2.0	1091	1.9	1597	1.6	23	1.600	GST05-1M □□□100C12	230
	903	2.7	1091	2.6	1597	2.2	23	1.600	GST06-1M □□□100C12	230
	706	1.8	852	1.7	1248	1.5	29	2.048	GST05-1M □□□100C12	230
	706	2.5	852	2.4	1248	2.1	29	2.048	GST06-1M □□□100C12	230
	645	1.7	779	1.6	1141	1.4	32	2.240	GST05-1M □□□100C12	230
	645	2.5	779	2.3	1141	2.1	32	2.240	GST06-1M □□□100C12	230
	506	1.3	611	1.2	894	1.1	41	2.857	GST05-1M □□□100C12	230
	506	2.3	611	2.2	894	1.9	41	2.857	GST06-1M □□□100C12	230
	489	1.5	590	1.4	865	1.3	42	2.956	GST05-2M □□□100C12	236
	434	1.7	524	1.6	767	1.4	47	3.333	GST05-2M □□□100C12	236
	413	1.1	499	1.0	730	0.9	50	3.500	GST05-1M □□□100C12	230
	413	2.1	499	2.0	730	1.8	50	3.500	GST06-1M □□□100C12	230
	357	1.4	431	1.4	630	1.2	57	4.053	GST05-2M □□□100C12	236
	317	1.6	383	1.5	561	1.4	65	4.556	GST06-1M □□□100C12	230
	317	2.9	383	2.7	561	2.4	65	4.556	GST07-1M □□□100C12	230
	316	1.4	382	1.4	559	1.2	65	4.571	GST05-2M □□□100C12	236
	316	3.1	382	2.9	559	2.6	65	4.571	GST06-2M □□□100C12	236
	279	1.2	336	1.2	493	1.0	73	5.187	GST05-2M □□□100C12	236
	271	2.8	328	2.6	480	2.3	75	5.324	GST06-2M □□□100C12	236
	259	2.5	313	2.3	458	2.1	80	5.583	GST07-1M □□□100C12	230
	255	1.3	308	1.2	451	1.1	81	5.667	GST06-1M □□□100C12	230
	247	1.2	298	1.2	437	1.0	83	5.850	GST05-2M □□□100C12	236
	247	2.7	298	2.6	437	2.3	83	5.850	GST06-2M □□□100C12	236
	226	1.2	273	1.1	399	1.0	90	6.400	GST05-2M □□□100C12	236
	226	2.5	273	2.4	399	2.1	90	6.400	GST06-2M □□□100C12	236
	205	2.4	248	2.3	363	2.0	99	7.040	GST06-2M □□□100C12	236
	200	1.1	241	1.0	353	0.9	102	7.238	GST05-2M □□□100C12	236
	197	1.9	238	1.8	348	1.6	105	7.333	GST07-1M □□□100C12	230
	197	2.8	238	2.6	348	2.3	105	7.333	GST09-1M □□□100C12	230
	177	1.0	214	1.0	313	0.8	115	8.163	GST05-2M □□□100C12	236
	177	2.2	214	2.1	313	1.8	115	8.163	GST06-2M □□□100C12	236
	162	1.4	196	1.4	287	1.2	128	8.900	GST07-1M □□□100C12	230
	162	2.3	196	2.2	287	1.9	128	8.900	GST09-1M □□□100C12	230
	160	0.9	194	0.9			127	9.010	GST05-2M □□□100C12	236
	160	2.1	194	2.0	284	1.7	127	9.010	GST06-2M □□□100C12	236
	145	0.9	175	0.8			141	10.000	GST05-2M □□□100C12	236
	145	1.9	175	1.8	256	1.6	141	10.000	GST06-2M □□□100C12	236
	129	0.8					158	11.200	GST05-2M □□□100C12	236
	129	1.8	156	1.7	228	1.5	158	11.200	GST06-2M □□□100C12	236
	128	1.8	155	1.7	227	1.5	161	11.250	GST09-1M □□□100C12	230
	115	1.7	139	1.6	203	1.4	177	12.571	GST06-2M □□□100C12	236

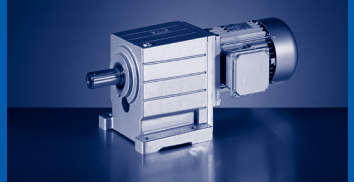

50 Hz: P_N=2.2 kW
60 Hz: P_N=2.6 kW
87 Hz: P_N=3.9 kW

n_N	1445 r/min		1745 r/min		2555 r/min		M_2 [Nm]	i		
f_N	50 Hz		60 Hz		87 Hz					
P_N	2.2 kW		2.6 kW		3.9 kW					
	n_2 [r/min]	c	n_2 [r/min]	c	n_2 [r/min]	c				
	101	1.5	122	1.5	179	1.3	202	14.286	GST06-2M □□□100C12	236
	101	3.2	122	3.0	179	2.7	202	14.286	GST07-2M □□□100C12	236
	94	1.5	113	1.5	166	1.4	217	15.400	GST06-2M □□□100C12	236
	94	3.0	113	3.0	166	2.8	217	15.400	GST07-2M □□□100C12	236
	83	1.3	100	1.3	146	1.2	247	17.500	GST06-2M □□□100C12	236
	83	2.8	100	2.8	146	2.6	247	17.500	GST07-2M □□□100C12	236
	72	1.2	87	1.2	128	1.2	283	20.044	GST06-2M □□□100C12	236
	72	2.5	87	2.5	128	2.3	283	20.044	GST07-2M □□□100C12	236
	63	1.0	77	1.0	112	0.9	321	22.778	GST06-2M □□□100C12	236
	63	2.1	77	2.1	112	2.0	321	22.778	GST07-2M □□□100C12	236
	59	2.0	71	2.0	104	1.9	347	24.567	GST07-2M □□□100C12	236
	58	1.0	70	1.0	103	1.0	352	24.933	GST06-2M □□□100C12	236
	52	1.8	63	1.8	92	1.7	394	27.917	GST07-2M □□□100C12	236
	45	1.6	54	1.6	79	1.5	455	32.267	GST07-2M □□□100C12	236
	45	2.8	54	2.8	79	2.6	455	32.267	GST09-2M □□□100C12	236
	39	1.4	48	1.4	70	1.3	517	36.667	GST07-2M □□□100C12	236
	39	2.8	48	2.8	70	2.6	517	36.667	GST09-2M □□□100C12	236
	37	1.3	45	1.3	65	1.2	552	39.160	GST07-2M □□□100C12	236
	37	1.3	45	1.3	65	1.2	545	39.200	GST07-3M □□□100C12	242
	37	2.3	45	2.3	65	2.2	552	39.160	GST09-2M □□□100C12	236
	37	2.9	45	2.9	65	2.8	552	39.160	GST11-2M □□□100C12	236
	36	2.4	44	2.4	64	2.3	558	40.136	GST09-3M □□□100C12	242
	33	1.1	39	1.1	57	1.1	628	44.500	GST07-2M □□□100C12	236
	33	1.2	40	1.2	58	1.2	611	44.000	GST07-3M □□□100C12	242
	33	2.2	40	2.2	59	2.2	601	43.267	GST09-3M □□□100C12	242
	33	2.3	39	2.3	57	2.3	628	44.500	GST09-2M □□□100C12	236
	33	2.9	39	2.9	57	2.9	628	44.500	GST11-2M □□□100C12	236
	29	1.8	35	1.8	52	1.8	698	49.500	GST09-2M □□□100C12	236
	29	2.2	36	2.2	52	2.2	683	49.167	GST09-3M □□□100C12	242
	29	2.3	35	2.3	52	2.3	698	49.500	GST11-2M □□□100C12	236
	28	1.0	34	1.0	50	1.0	709	51.022	GST07-3M □□□100C12	242
	27	0.9	32	0.9	47	0.9	749	53.900	GST07-3M □□□100C12	242
	27	1.9	33	1.9	48	1.9	737	53.044	GST09-3M □□□100C12	242
	26	1.8	31	1.8	45	1.8	794	56.250	GST09-2M □□□100C12	236
	26	2.3	31	2.3	45	2.3	794	56.250	GST11-2M □□□100C12	236
	25	3.2	30	3.2	44	3.2	805	57.968	GST11-3M □□□100C12	242
	24	1.9	29	1.9	42	1.9	838	60.278	GST09-3M □□□100C12	242
	24	3.2	29	3.2	42	3.2	851	61.250	GST11-3M □□□100C12	242
	20	1.5	24	1.5	36	1.5	999	71.867	GST09-3M □□□100C12	242
	20	2.7	25	2.7	36	2.7	987	71.011	GST11-3M □□□100C12	242
	18	1.4	21	1.4	31	1.4	1135	81.667	GST09-3M □□□100C12	242

50 Hz: P_N=2.2 kW
60 Hz: P_N=2.6 kW
87 Hz: P_N=3.9 kW

n_N	1445 r/min		1745 r/min		2555 r/min		M_2 [Nm]	i		
f_N	50 Hz		60 Hz		87 Hz					
P_N	2.2 kW		2.6 kW		3.9 kW					
	n_2 [r/min]	c	n_2 [r/min]	c	n_2 [r/min]	c				
	18	2.5	22	2.5	32	2.5	1121	80.694	GST11-3M □□□100C12	242
	17	2.2	20	2.2	29	2.2	1213	87.267	GST11-3M □□□100C12	242
	15	1.2	19	1.2	27	1.2	1300	93.541	GST09-3M □□□100C12	242
	15	1.2	18	1.2	26	1.2	1378	99.167	GST09-3M □□□100C12	242
	15	2.0	18	2.0	26	2.0	1378	99.167	GST11-3M □□□100C12	242
	13	1.0	15	1.0	23	1.0	1578	113.585	GST09-3M □□□100C12	242
	13	1.7	16	1.7	23	1.7	1569	112.933	GST11-3M □□□100C12	242
	11	0.9	14	0.9	20	0.9	1793	129.074	GST09-3M □□□100C12	242
	11	1.6	14	1.6	20	1.6	1793	129.074	GST11-3M □□□100C12	242
	10	0.8	12	0.8	18	0.8	1963	141.289	GST09-3M □□□100C12	242
	10	3.0	13	3.0	18	3.0	1934	139.211	GST14-3M □□□100C12	242
	9.8	1.3	12	1.3	17	1.3	2042	146.993	GST11-3M □□□100C12	242
	9.1	1.3	11	1.3	16	1.3	2198	158.194	GST11-3M □□□100C12	242
	9.1	2.7	11	2.7	16	2.7	2198	158.194	GST14-3M □□□100C12	242
	8.4	2.5	10	2.5	15	2.5	2378	171.111	GST14-3M □□□100C12	242
	8	1.1	9.7	1.1	14	1.1	2503	180.156	GST11-3M □□□100C12	242
	7.1	2.1	8.5	2.1	13	2.1	2845	204.722	GST14-3M □□□100C12	242
	7	1.0	8.4	1.0	12	1.0	2887	207.778	GST11-3M □□□100C12	242
	6.1	0.8	7.4	0.8	11	0.8	3288	236.622	GST11-3M □□□100C12	242
	6.1	1.8	7.4	1.8	11	1.8	3288	236.622	GST14-3M □□□100C12	242
	5.8	1.7	7	1.7	10	1.7	3452	248.458	GST14-3M □□□100C12	242
	5.7	0.8	6.9	0.8	10	0.8	3504	252.167	GST11-3M □□□100C12	242
	5.4	1.6	6.5	1.6	9.5	1.6	3736	268.889	GST14-3M □□□100C12	242
	4.4	1.3	5.4	1.3	7.8	1.3	4534	326.333	GST14-3M □□□100C12	242
	4	1.2	4.8	1.2	7	1.2	5044	363.000	GST14-3M □□□100C12	242
	3.5	1.0	4.2	1.0	6.2	1.0	5731	412.500	GST14-3M □□□100C12	242

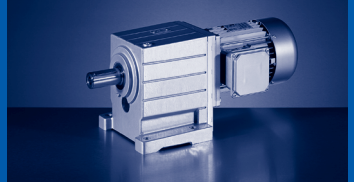

50 Hz: P_N=3.0 kW
60 Hz: P_N=3.6 kW
87 Hz: P_N=5.4 kW

n_N	1445 r/min		1745 r/min		2555 r/min		M_2 [Nm]	i		
f_N	50 Hz		60 Hz		87 Hz					
P_N	3.0 kW		3.6 kW		5.4 kW					
	n_2 [r/min]	c	n_2 [r/min]	c	n_2 [r/min]	c				
	903	1.4	1091	1.4	1597	1.2	31	1.600	GST05-1M □□□100C32	230
	903	2.0	1091	1.9	1597	1.7	31	1.600	GST06-1M □□□100C32	230
	723	3.2	873	3.0	1278	2.7	39	2.000	GST07-1M □□□100C32	230
	706	1.3	852	1.3	1248	1.1	40	2.048	GST05-1M □□□100C32	230
	706	1.8	852	1.7	1248	1.5	40	2.048	GST06-1M □□□100C32	230
	645	1.2	779	1.2	1141	1.0	44	2.240	GST05-1M □□□100C32	230
	645	1.8	779	1.7	1141	1.5	44	2.240	GST06-1M □□□100C32	230
	645	3.1	779	2.9	1141	2.6	44	2.240	GST07-1M □□□100C32	230
	506	1.0	611	0.9			56	2.857	GST05-1M □□□100C32	230
	506	1.7	611	1.6	894	1.4	56	2.857	GST06-1M □□□100C32	230
	506	2.8	611	2.7	894	2.4	56	2.857	GST07-1M □□□100C32	230
	489	1.1	590	1.1	865	0.9	57	2.956	GST05-2M □□□100C32	236
	476	2.9	575	2.7	842	2.4	58	3.033	GST06-2M □□□100C32	236
	434	1.2	524	1.2	767	1.0	64	3.333	GST05-2M □□□100C32	236
	434	2.7	524	2.6	767	2.3	64	3.333	GST06-2M □□□100C32	236
	413	1.5	499	1.5	730	1.3	68	3.500	GST06-1M □□□100C32	230
	413	2.5	499	2.4	730	2.1	68	3.500	GST07-1M □□□100C32	230
	357	1.0	431	1.0	630	0.9	78	4.053	GST05-2M □□□100C32	236
	347	2.4	420	2.3	614	2.0	80	4.160	GST06-2M □□□100C32	236
	317	1.2	383	1.1	561	1.0	89	4.556	GST06-1M □□□100C32	230
	317	2.1	383	2.0	561	1.8	89	4.556	GST07-1M □□□100C32	230
	316	1.0	382	1.0	559	0.9	88	4.571	GST05-2M □□□100C32	236
	316	2.3	382	2.2	559	1.9	88	4.571	GST06-2M □□□100C32	236
	310	3.0	374	2.8	548	2.5	91	4.667	GST09-1M □□□100C32	230
	279	0.9	336	0.9			100	5.187	GST05-2M □□□100C32	236
	271	2.0	328	1.9	480	1.7	102	5.324	GST06-2M □□□100C32	236
	259	1.8	313	1.7	458	1.5	109	5.583	GST07-1M □□□100C32	230
	255	1.0	308	0.9			111	5.667	GST06-1M □□□100C32	230
	255	2.5	308	2.4	451	2.1	111	5.667	GST09-1M □□□100C32	230
	247	0.9	298	0.9			113	5.850	GST05-2M □□□100C32	236
	247	2.0	298	1.9	437	1.7	113	5.850	GST06-2M □□□100C32	236
	226	0.9	273	0.8			123	6.400	GST05-2M □□□100C32	236
	226	1.9	273	1.8	399	1.6	123	6.400	GST06-2M □□□100C32	236
	205	1.7	248	1.7	363	1.5	135	7.040	GST06-2M □□□100C32	236
	197	1.4	238	1.3	348	1.2	143	7.333	GST07-1M □□□100C32	230
	197	2.0	238	1.9	348	1.7	143	7.333	GST09-1M □□□100C32	230
	177	1.6	214	1.5	313	1.3	157	8.163	GST06-2M □□□100C32	236
	164	3.1	198	3.0	290	2.6	169	8.800	GST07-2M □□□100C32	236
	162	1.1	196	1.0	287	0.9	174	8.900	GST07-1M □□□100C32	230
	162	1.7	196	1.6	287	1.4	174	8.900	GST09-1M □□□100C32	230
	160	1.5	194	1.4	284	1.3	173	9.010	GST06-2M □□□100C32	236

50 Hz: P_N=3.0 kW
60 Hz: P_N=3.6 kW
87 Hz: P_N=5.4 kW

n_N	1445 r/min		1745 r/min		2555 r/min		M_2 [Nm]	i		
f_N	50 Hz		60 Hz		87 Hz					
P_N	3.0 kW		3.6 kW		5.4 kW					
	n_2 [r/min]	c	n_2 [r/min]	c	n_2 [r/min]	c				
	147	2.9	177	2.8	259	2.4	190	9.856	GST07-2M □□□100C32	236
	145	1.4	175	1.3	256	1.2	192	10.000	GST06-2M □□□100C32	236
	129	1.3	156	1.2	228	1.1	215	11.200	GST06-2M □□□100C32	236
	129	2.8	156	2.6	228	2.3	215	11.200	GST07-2M □□□100C32	236
	128	1.3	155	1.3	227	1.1	220	11.250	GST09-1M □□□100C32	230
	115	1.2	139	1.2	203	1.0	242	12.571	GST06-2M □□□100C32	236
	115	2.5	139	2.4	203	2.1	242	12.571	GST07-2M □□□100C32	236
	101	1.1	122	1.1	179	0.9	275	14.286	GST06-2M □□□100C32	236
	101	2.3	122	2.2	179	2.0	275	14.286	GST07-2M □□□100C32	236
	94	1.1	113	1.1	166	1.0	296	15.400	GST06-2M □□□100C32	236
	94	2.2	113	2.2	166	2.1	296	15.400	GST07-2M □□□100C32	236
	83	0.9	100	0.9	146	0.9	337	17.500	GST06-2M □□□100C32	236
	83	2.0	100	2.0	146	1.9	337	17.500	GST07-2M □□□100C32	236
	72	0.9	87	0.9	128	0.9	386	20.044	GST06-2M □□□100C32	236
	72	1.8	87	1.8	128	1.7	386	20.044	GST07-2M □□□100C32	236
	70	3.0	85	3.0	124	2.8	395	20.533	GST09-2M □□□100C32	236
	63	1.6	77	1.6	112	1.5	438	22.778	GST07-2M □□□100C32	236
	62	3.0	75	3.0	110	2.8	449	23.333	GST09-2M □□□100C32	236
	59	1.5	71	1.5	104	1.4	473	24.567	GST07-2M □□□100C32	236
	58	2.5	70	2.5	103	2.4	480	24.933	GST09-2M □□□100C32	236
	52	1.3	63	1.3	92	1.2	537	27.917	GST07-2M □□□100C32	236
	51	2.5	62	2.5	90	2.4	545	28.333	GST09-2M □□□100C32	236
	45	1.1	54	1.1	79	1.1	621	32.267	GST07-2M □□□100C32	236
	45	2.0	54	2.0	79	1.9	621	32.267	GST09-2M □□□100C32	236
	45	2.5	54	2.5	79	2.4	621	32.267	GST11-2M □□□100C32	236
	39	1.0	48	1.0	70	1.0	705	36.667	GST07-2M □□□100C32	236
	39	2.0	48	2.0	70	1.9	705	36.667	GST09-2M □□□100C32	236
	39	2.5	48	2.5	70	2.4	705	36.667	GST11-2M □□□100C32	236
	37	0.9	45	0.9	65	0.9	753	39.160	GST07-2M □□□100C32	236
	37	0.9	45	0.9	65	0.9	743	39.200	GST07-3M □□□100C32	242
	37	1.7	45	1.7	65	1.6	753	39.160	GST09-2M □□□100C32	236
	37	2.1	45	2.1	65	2.0	753	39.160	GST11-2M □□□100C32	236
	36	1.8	44	1.8	64	1.7	760	40.136	GST09-3M □□□100C32	242
	33	0.8	39	0.8	57	0.8	856	44.500	GST07-2M □□□100C32	236
	33	0.9	40	0.9	58	0.9	834	44.000	GST07-3M □□□100C32	242
	33	1.6	40	1.6	59	1.6	820	43.267	GST09-3M □□□100C32	242
	33	1.7	39	1.7	57	1.7	856	44.500	GST09-2M □□□100C32	236
	33	2.1	39	2.1	57	2.1	856	44.500	GST11-2M □□□100C32	236
	33	2.9	40	2.9	58	2.9	834	44.000	GST11-3M □□□100C32	242
	29	1.4	35	1.4	52	1.4	952	49.500	GST09-2M □□□100C32	236
	29	1.6	36	1.6	52	1.6	932	49.167	GST09-3M □□□100C32	242

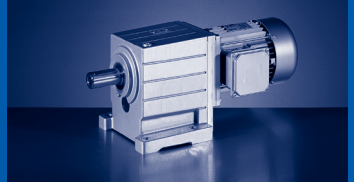

50 Hz: P_N=3.0 kW
60 Hz: P_N=3.6 kW
87 Hz: P_N=5.4 kW

n_N	1445 r/min		1745 r/min		2555 r/min		M_2 [Nm]	i		
f_N	50 Hz		60 Hz		87 Hz					
P_N	3.0 kW		3.6 kW		5.4 kW					
	n_2 [r/min]	c	n_2 [r/min]	c	n_2 [r/min]	c				
	29	1.7	35	1.7	52	1.7	952	49.500	GST11-2M □□□100C32	236
	29	2.9	35	2.9	51	2.9	947	50.000	GST11-3M □□□100C32	242
	27	1.4	33	1.4	48	1.4	1005	53.044	GST09-3M □□□100C32	242
	26	1.4	31	1.4	45	1.4	1082	56.250	GST09-2M □□□100C32	236
	26	1.7	31	1.7	45	1.7	1082	56.250	GST11-2M □□□100C32	236
	25	2.4	30	2.4	44	2.4	1098	57.968	GST11-3M □□□100C32	242
	24	1.4	29	1.4	42	1.4	1142	60.278	GST09-3M □□□100C32	242
	24	2.4	29	2.4	42	2.4	1161	61.250	GST11-3M □□□100C32	242
	20	1.1	24	1.1	36	1.1	1362	71.867	GST09-3M □□□100C32	242
	20	2.0	25	2.0	36	2.0	1345	71.011	GST11-3M □□□100C32	242
	18	1.0	21	1.0	31	1.0	1547	81.667	GST09-3M □□□100C32	242
	18	1.8	22	1.8	32	1.8	1529	80.694	GST11-3M □□□100C32	242
	17	1.6	20	1.6	29	1.6	1653	87.267	GST11-3M □□□100C32	242
	15	0.9	19	0.9	27	0.9	1772	93.541	GST09-3M □□□100C32	242
	15	0.9	18	0.9	26	0.9	1879	99.167	GST09-3M □□□100C32	242
	15	1.5	18	1.5	26	1.5	1879	99.167	GST11-3M □□□100C32	242
	15	3.0	19	3.0	27	3.0	1772	93.541	GST14-3M □□□100C32	242
	14	2.9	16	2.9	24	2.9	2014	106.296	GST14-3M □□□100C32	242
	13	1.3	16	1.3	23	1.3	2140	112.933	GST11-3M □□□100C32	242
	11	1.2	14	1.2	20	1.2	2446	129.074	GST11-3M □□□100C32	242
	11	2.4	13	2.4	20	2.4	2468	130.278	GST14-3M □□□100C32	242
	10	2.2	13	2.2	18	2.2	2638	139.211	GST14-3M □□□100C32	242
	9.8	1.0	12	1.0	17	1.0	2785	146.993	GST11-3M □□□100C32	242
	9.1	0.9	11	0.9	16	0.9	2997	158.194	GST11-3M □□□100C32	242
	9.1	2.0	11	2.0	16	2.0	2997	158.194	GST14-3M □□□100C32	242
	8.4	1.8	10	1.8	15	1.8	3242	171.111	GST14-3M □□□100C32	242
	7.1	1.5	8.5	1.5	13	1.5	3879	204.722	GST14-3M □□□100C32	242
	6.1	1.3	7.4	1.3	11	1.3	4483	236.622	GST14-3M □□□100C32	242
	5.8	1.3	7	1.3	10	1.3	4708	248.458	GST14-3M □□□100C32	242
	5.4	1.2	6.5	1.2	9.5	1.2	5095	268.889	GST14-3M □□□100C32	242
	4.4	1.0	5.4	1.0	7.8	1.0	6183	326.333	GST14-3M □□□100C32	242
	4	0.8	4.8	0.8	7	0.8	6878	363.000	GST14-3M □□□100C32	242

50 Hz: P_N=4.0 kW
60 Hz: P_N=4.8 kW
87 Hz: P_N=7.1 kW

n_N	1455 r/min		1755 r/min		2565 r/min		M_2 [Nm]	i		
f_N	50 Hz		60 Hz		87 Hz					
P_N	4.0 kW		4.8 kW		7.1 kW					
	n_2 [r/min]	c	n_2 [r/min]	c	n_2 [r/min]	c				
	909	1.5	1097	1.4	1603	1.2	41	1.600	GST06-1M □□□112C22	230
	895	2.5	1080	2.4	1579	2.1	42	1.625	GST07-1M □□□112C22	230
	728	2.4	878	2.3	1283	2.0	52	2.000	GST07-1M □□□112C22	230
	711	1.4	857	1.3	1253	1.1	53	2.048	GST06-1M □□□112C22	230
	650	1.4	784	1.3	1145	1.1	58	2.240	GST06-1M □□□112C22	230
	650	2.3	784	2.2	1145	1.9	58	2.240	GST07-1M □□□112C22	230
	509	1.3	614	1.2	898	1.1	74	2.857	GST06-1M □□□112C22	230
	509	2.2	614	2.0	898	1.8	74	2.857	GST07-1M □□□112C22	230
	480	2.2	579	2.0	846	1.8	77	3.033	GST06-2M □□□112C22	236
	437	2.1	527	1.9	770	1.7	85	3.333	GST06-2M □□□112C22	236
	416	1.2	501	1.1	733	1.0	91	3.500	GST06-1M □□□112C22	230
	416	1.9	501	1.8	733	1.6	91	3.500	GST07-1M □□□112C22	230
	350	1.8	422	1.7	617	1.5	106	4.160	GST06-2M □□□112C22	236
	319	1.6	385	1.5	563	1.3	118	4.556	GST07-1M □□□112C22	230
	318	1.7	384	1.6	561	1.4	116	4.571	GST06-2M □□□112C22	236
	312	2.6	376	2.4	550	2.1	121	4.667	GST09-1M □□□112C22	230
	280	3.2	338	3.1	493	2.7	132	5.200	GST07-2M □□□112C22	236
	273	1.5	330	1.5	482	1.3	136	5.324	GST06-2M □□□112C22	236
	261	1.4	314	1.3	459	1.1	144	5.583	GST07-1M □□□112C22	230
	257	2.2	310	2.1	453	1.8	147	5.667	GST09-1M □□□112C22	230
	255	3.1	307	2.9	449	2.6	146	5.714	GST07-2M □□□112C22	236
	249	1.5	300	1.4	438	1.2	149	5.850	GST06-2M □□□112C22	236
	227	1.4	274	1.3	401	1.2	163	6.400	GST06-2M □□□112C22	236
	227	2.8	274	2.7	401	2.4	163	6.400	GST07-2M □□□112C22	236
	207	1.3	249	1.3	364	1.1	179	7.040	GST06-2M □□□112C22	236
	204	2.7	246	2.6	359	2.2	182	7.150	GST07-2M □□□112C22	236
	198	1.8	239	1.7	350	1.5	190	7.333	GST09-1M □□□112C22	230
	179	2.6	216	2.5	316	2.2	207	8.125	GST07-2M □□□112C22	236
	178	1.2	215	1.2	314	1.0	208	8.163	GST06-2M □□□112C22	236
	165	2.4	199	2.2	292	2.0	224	8.800	GST07-2M □□□112C22	236
	164	1.5	197	1.4	288	1.2	230	8.900	GST09-1M □□□112C22	230
	162	1.1	195	1.1	285	1.0	230	9.010	GST06-2M □□□112C22	236
	148	2.2	178	2.1	260	1.8	251	9.856	GST07-2M □□□112C22	236
	146	1.1	176	1.0	257	0.9	255	10.000	GST06-2M □□□112C22	236
	130	1.0	157	0.9	229	0.8	285	11.200	GST06-2M □□□112C22	236
	130	2.1	157	2.0	229	1.8	285	11.200	GST07-2M □□□112C22	236
	116	0.9	140	0.9			320	12.571	GST06-2M □□□112C22	236
	116	1.9	140	1.8	204	1.6	320	12.571	GST07-2M □□□112C22	236
	102	0.8					364	14.286	GST06-2M □□□112C22	236
	102	1.8	123	1.7	180	1.5	364	14.286	GST07-2M □□□112C22	236
	95	0.8	114	0.8			392	15.400	GST06-2M □□□112C22	236

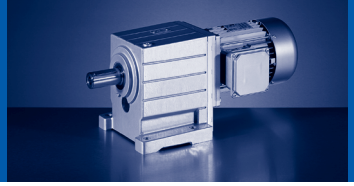

50 Hz: P_N=4.0 kW
60 Hz: P_N=4.8 kW
87 Hz: P_N=7.1 kW

n_N	1455 r/min		1755 r/min		2565 r/min		M_2 [Nm]	i		
f_N	50 Hz		60 Hz		87 Hz					
P_N	4.0 kW		4.8 kW		7.1 kW					
	n_2 [r/min]	c	n_2 [r/min]	c	n_2 [r/min]	c				
	95	1.6	114	1.6	167	1.6	392	15.400	GST07-2M □□□112C22	236
	85	3.1	102	3.1	149	3.0	439	17.222	GST09-2M □□□112C22	236
	83	1.5	100	1.5	147	1.5	446	17.500	GST07-2M □□□112C22	236
	73	1.4	88	1.4	128	1.3	511	20.044	GST07-2M □□□112C22	236
	71	2.6	86	2.6	125	2.4	523	20.533	GST09-2M □□□112C22	236
	64	1.2	77	1.2	113	1.1	580	22.778	GST07-2M □□□112C22	236
	62	2.5	75	2.5	110	2.4	594	23.333	GST09-2M □□□112C22	236
	59	1.1	71	1.1	104	1.1	626	24.567	GST07-2M □□□112C22	236
	58	2.2	70	2.2	103	2.1	635	24.933	GST09-2M □□□112C22	236
	58	2.7	70	2.7	103	2.6	635	24.933	GST11-2M □□□112C22	236
	52	1.0	63	1.0	92	0.9	711	27.917	GST07-2M □□□112C22	236
	51	2.1	62	2.1	91	2.0	722	28.333	GST09-2M □□□112C22	236
	51	2.7	62	2.7	91	2.6	722	28.333	GST11-2M □□□112C22	236
	45	1.7	54	1.7	80	1.7	822	32.267	GST09-2M □□□112C22	236
	45	2.2	54	2.2	80	2.1	822	32.267	GST11-2M □□□112C22	236
	45	2.7	54	2.7	80	2.6	822	32.267	GST14-2M □□□112C22	236
	40	1.6	48	1.6	70	1.6	934	36.667	GST09-2M □□□112C22	236
	40	2.2	48	2.2	70	2.1	934	36.667	GST11-2M □□□112C22	236
	40	2.7	48	2.7	70	2.6	934	36.667	GST14-2M □□□112C22	236
	37	1.5	45	1.5	66	1.4	997	39.160	GST09-2M □□□112C22	236
	37	1.8	45	1.8	66	1.7	997	39.160	GST11-2M □□□112C22	236
	37	2.3	45	2.3	66	2.2	997	39.160	GST14-2M □□□112C22	236
	36	1.3	44	1.3	64	1.3	1007	40.136	GST09-3M □□□112C22	242
	36	2.5	43	2.5	63	2.4	1024	40.816	GST11-3M □□□112C22	242
	34	1.2	41	1.2	59	1.2	1086	43.267	GST09-3M □□□112C22	242
	33	1.4	39	1.4	58	1.4	1133	44.500	GST09-2M □□□112C22	236
	33	1.8	39	1.8	58	1.8	1133	44.500	GST11-2M □□□112C22	236
	33	2.2	40	2.2	58	2.2	1104	44.000	GST11-3M □□□112C22	242
	33	2.3	39	2.3	58	2.3	1133	44.500	GST14-2M □□□112C22	236
	30	1.2	36	1.2	52	1.2	1234	49.167	GST09-3M □□□112C22	242
	29	1.5	36	1.5	52	1.5	1261	49.500	GST11-2M □□□112C22	236
	29	1.8	36	1.8	52	1.8	1261	49.500	GST14-2M □□□112C22	236
	29	2.2	35	2.2	51	2.2	1254	50.000	GST11-3M □□□112C22	242
	27	1.0	33	1.0	48	1.0	1331	53.044	GST09-3M □□□112C22	242
	26	1.5	31	1.5	46	1.5	1433	56.250	GST11-2M □□□112C22	236
	26	1.8	31	1.8	46	1.8	1433	56.250	GST14-2M □□□112C22	236
	25	1.8	30	1.8	44	1.8	1454	57.968	GST11-3M □□□112C22	242
	24	1.0	29	1.0	43	1.0	1512	60.278	GST09-3M □□□112C22	242
	24	1.8	29	1.8	42	1.8	1537	61.250	GST11-3M □□□112C22	242
	21	1.5	25	1.5	36	1.5	1782	71.011	GST11-3M □□□112C22	242
	21	2.8	25	2.8	37	2.8	1732	69.042	GST14-3M □□□112C22	242

50 Hz: P_N=4.0 kW
60 Hz: P_N=4.8 kW
87 Hz: P_N=7.1 kW

n_N	1455 r/min		1755 r/min		2565 r/min		M_2 [Nm]	i		
f_N	50 Hz		60 Hz		87 Hz					
P_N	4.0 kW		4.8 kW		7.1 kW					
	n_2 [r/min]	c	n_2 [r/min]	c	n_2 [r/min]	c				
	20	0.8	24	0.8	36	0.8	1803	71.867	GST09-3M □□□112C22	242
	19	2.8	22	2.8	33	2.8	1968	78.457	GST14-3M □□□112C22	242
	18	1.4	22	1.4	32	1.4	2025	80.694	GST11-3M □□□112C22	242
	17	1.2	20	1.2	29	1.2	2189	87.267	GST11-3M □□□112C22	242
	16	2.4	19	2.4	27	2.4	2347	93.541	GST14-3M □□□112C22	242
	15	1.1	18	1.1	26	1.1	2488	99.167	GST11-3M □□□112C22	242
	15	2.4	18	2.4	27	2.4	2413	96.157	GST14-3M □□□112C22	242
	14	2.2	17	2.2	24	2.2	2667	106.296	GST14-3M □□□112C22	242
	13	1.0	16	1.0	23	1.0	2833	112.933	GST11-3M □□□112C22	242
	11	0.9	14	0.9	20	0.9	3238	129.074	GST11-3M □□□112C22	242
	11	1.6	13	1.6	18	1.6	3493	139.211	GST14-3M □□□112C22	242
	11	1.8	14	1.8	20	1.8	3269	130.278	GST14-3M □□□112C22	242
	9.2	1.5	11	1.5	16	1.5	3969	158.194	GST14-3M □□□112C22	242
	8.5	1.4	10	1.4	15	1.4	4293	171.111	GST14-3M □□□112C22	242
	7.1	1.2	8.6	1.2	13	1.2	5136	204.722	GST14-3M □□□112C22	242
	6.2	1.0	7.4	1.0	11	1.0	5937	236.622	GST14-3M □□□112C22	242
	5.9	1.0	7.1	1.0	10	1.0	6234	248.458	GST14-3M □□□112C22	242
	5.4	0.9	6.5	0.9	9.5	0.9	6746	268.889	GST14-3M □□□112C22	242

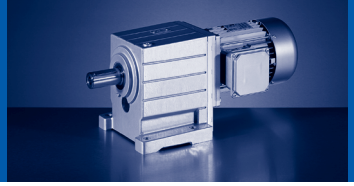

50 Hz: P_N=5.5 kW
60 Hz: P_N=6.6 kW
87 Hz: P_N=9.7 kW

n_N	1470 r/min		1770 r/min		2580 r/min		M_2 [Nm]	i		
f_N	50 Hz		60 Hz		87 Hz					
P_N	5.5 kW		6.6 kW		9.7 kW					
	n_2 [r/min]	c	n_2 [r/min]	c	n_2 [r/min]	c				
	905	1.9	1089	1.8	1588	1.6	57	1.625	GST07-1M □□□132C12	230
	735	1.8	885	1.7	1290	1.5	70	2.000	GST07-1M □□□132C12	230
	656	1.7	790	1.6	1152	1.4	79	2.240	GST07-1M □□□132C12	230
	515	1.6	620	1.5	903	1.3	101	2.857	GST07-1M □□□132C12	230
	485	1.6	584	1.5	851	1.3	105	3.033	GST06-2M□□□132C12	236
	482	3.3	581	3.2	846	2.8	106	3.048	GST07-2M □□□132C12	236
	441	1.5	531	1.4	774	1.3	116	3.333	GST06-2M□□□132C12	236
	439	3.2	528	3.0	770	2.6	116	3.350	GST07-2M □□□132C12	236
	420	1.4	506	1.3	737	1.2	123	3.500	GST07-1M □□□132C12	230
	353	1.3	426	1.3	620	1.1	144	4.160	GST06-2M□□□132C12	236
	348	2.7	419	2.6	611	2.3	147	4.225	GST07-2M □□□132C12	236
	322	1.3	387	1.2	564	1.1	159	4.571	GST06-2M□□□132C12	236
	317	2.6	381	2.4	556	2.2	161	4.643	GST07-2M □□□132C12	236
	315	2.3	379	2.2	553	1.9	164	4.667	GST09-1M □□□132C12	230
	283	2.4	340	2.2	496	2.0	180	5.200	GST07-2M □□□132C12	236
	276	1.1	333	1.1	485	0.9	185	5.324	GST06-2M□□□132C12	236
	259	2.3	312	2.2	455	2.0	199	5.667	GST09-1M □□□132C12	230
	257	2.3	310	2.1	452	1.9	198	5.714	GST07-2M □□□132C12	236
	251	1.1	303	1.0	441	0.9	203	5.850	GST06-2M□□□132C12	236
	230	1.0	277	1.0	403	0.9	222	6.400	GST06-2M□□□132C12	236
	230	2.1	277	2.0	403	1.7	222	6.400	GST07-2M □□□132C12	236
	209	1.0	251	0.9	367	0.8	244	7.040	GST06-2M□□□132C12	236
	206	2.0	248	1.9	361	1.6	248	7.150	GST07-2M □□□132C12	236
	181	1.9	218	1.8	318	1.6	282	8.125	GST07-2M □□□132C12	236
	180	0.9	217	0.8			283	8.163	GST06-2M□□□132C12	236
	167	1.7	201	1.6	293	1.4	305	8.800	GST07-2M □□□132C12	236
	163	0.8					312	9.010	GST06-2M□□□132C12	236
	149	1.6	180	1.5	262	1.3	342	9.856	GST07-2M □□□132C12	236
	131	1.5	158	1.5	230	1.3	388	11.200	GST07-2M □□□132C12	236
	126	3.0	152	2.8	221	2.5	404	11.667	GST09-2M □□□132C12	236
	119	2.9	143	2.8	209	2.4	429	12.362	GST09-2M □□□132C12	236
	117	1.4	141	1.3	205	1.2	436	12.571	GST07-2M □□□132C12	236
	105	2.6	126	2.5	184	2.2	487	14.048	GST09-2M □□□132C12	236
	103	1.3	124	1.2	181	1.1	495	14.286	GST07-2M □□□132C12	236
	97	2.6	117	2.6	170	2.4	525	15.156	GST09-2M □□□132C12	236
	96	1.2	115	1.2	168	1.1	534	15.400	GST07-2M □□□132C12	236
	85	2.3	103	2.3	150	2.2	597	17.222	GST09-2M □□□132C12	236
	84	1.1	101	1.1	147	1.1	607	17.500	GST07-2M □□□132C12	236
	72	2.1	86	2.1	126	2.0	712	20.533	GST09-2M □□□132C12	236
	63	1.9	76	1.9	111	1.8	809	23.333	GST09-2M □□□132C12	236
	59	1.8	71	1.8	104	1.7	864	24.933	GST09-2M □□□132C12	236

50 Hz: P_N=5.5 kW
60 Hz: P_N=6.6 kW
87 Hz: P_N=9.7 kW

n_N	1470 r/min		1770 r/min		2580 r/min		M_2 [Nm]	i		
f_N	50 Hz		60 Hz		87 Hz					
P_N	5.5 kW		6.6 kW		9.7 kW					
	n_2 [r/min]	c	n_2 [r/min]	c	n_2 [r/min]	c				
	59	3.2	71	3.2	104	3.1	864	24.933	GST11-2M □□□132C12	236
	52	1.6	63	1.6	91	1.5	982	28.333	GST09-2M □□□132C12	236
	52	3.0	63	3.0	91	2.8	982	28.333	GST11-2M □□□132C12	236
	46	2.5	55	2.5	80	2.4	1119	32.267	GST11-2M □□□132C12	236
	40	2.3	48	2.3	70	2.2	1271	36.667	GST11-2M □□□132C12	236
	38	2.1	45	2.1	66	2.0	1358	39.160	GST11-2M □□□132C12	236
	36	1.8	43	1.8	63	1.7	1394	40.816	GST11-3M □□□132C12	242
	35	2.9	42	2.9	61	2.9	1454	42.580	GST14-3M □□□132C12	242
	33	1.6	40	1.6	59	1.6	1502	44.000	GST11-3M □□□132C12	242
	33	1.9	40	1.9	58	1.9	1543	44.500	GST11-2M □□□132C12	236
	30	2.5	36	2.5	52	2.5	1716	49.500	GST14-2M □□□132C12	236
	30	2.9	37	2.9	53	2.9	1652	48.386	GST14-3M □□□132C12	242
	29	1.6	35	1.6	52	1.6	1707	50.000	GST11-3M □□□132C12	242
	28	2.6	33	2.6	49	2.6	1815	53.148	GST14-3M □□□132C12	242
	26	2.5	32	2.5	46	2.5	1950	56.250	GST14-2M □□□132C12	236
	25	1.3	31	1.3	45	1.3	1979	57.968	GST11-3M □□□132C12	242
	25	2.6	30	2.6	44	2.6	2026	59.321	GST14-3M □□□132C12	242
	24	1.3	29	1.3	42	1.3	2091	61.250	GST11-3M □□□132C12	242
	21	1.1	25	1.1	36	1.1	2425	71.011	GST11-3M □□□132C12	242
	21	2.1	26	2.1	37	2.1	2357	69.042	GST14-3M □□□132C12	242
	19	2.1	23	2.1	33	2.1	2679	78.457	GST14-3M □□□132C12	242
	18	1.0	22	1.0	32	1.0	2755	80.694	GST11-3M □□□132C12	242
	17	0.9	20	0.9	30	0.9	2980	87.267	GST11-3M □□□132C12	242
	16	1.7	19	1.7	28	1.7	3194	93.541	GST14-3M □□□132C12	242
	15	0.8	18	0.8	26	0.8	3386	99.167	GST11-3M □□□132C12	242
	15	1.8	18	1.8	27	1.8	3283	96.157	GST14-3M □□□132C12	242
	14	1.6	17	1.6	24	1.6	3630	106.296	GST14-3M □□□132C12	242
	11	1.2	13	1.2	19	1.2	4753	139.211	GST14-3M □□□132C12	242
	11	1.3	14	1.3	20	1.3	4448	130.278	GST14-3M □□□132C12	242
	9.3	1.1	11	1.1	16	1.1	5402	158.194	GST14-3M □□□132C12	242
	8.6	1.0	10	1.0	15	1.0	5843	171.111	GST14-3M □□□132C12	242

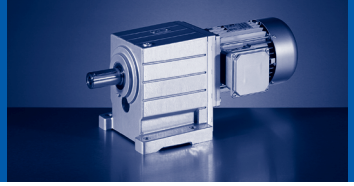

50 Hz: P_N=7.5 kW
60 Hz: P_N=9.0 kW
87 Hz: P_N=13.2 kW

n_N	1460 r/min		1760 r/min		2570 r/min		M_2 [Nm]	i		
f_N	50 Hz		60 Hz		87 Hz					
P_N	7.5 kW		9.0 kW		13.2 kW					
	n_2 [r/min]	c	n_2 [r/min]	c	n_2 [r/min]	c				
	899	1.4	1083	1.3	1582	1.1	79	1.625	GST07-1M □□□132C22	230
	730	1.3	880	1.2	1285	1.1	97	2.000	GST07-1M □□□132C22	230
	652	1.2	786	1.2	1147	1.0	108	2.240	GST07-1M □□□132C22	230
	520	3.1	626	2.9	915	2.6	136	2.810	GST09-1M □□□132C22	230
	511	1.2	616	1.1	900	1.0	138	2.857	GST07-1M □□□132C22	230
	481	1.2	580	1.1	847	1.0	144	3.033	GST06-2M□□□132C22	236
	479	2.4	577	2.3	843	2.0	145	3.048	GST07-2M □□□132C22	236
	438	1.1	528	1.0	771	0.9	159	3.333	GST06-2M□□□132C22	236
	436	2.3	525	2.2	767	1.9	159	3.350	GST07-2M □□□132C22	236
	424	2.7	511	2.5	746	2.2	166	3.444	GST09-1M □□□132C22	230
	417	1.0	503	1.0	734	0.9	169	3.500	GST07-1M □□□132C22	230
	351	1.0	423	0.9	618	0.8	198	4.160	GST06-2M□□□132C22	236
	346	2.0	417	1.9	608	1.7	201	4.225	GST07-2M □□□132C22	236
	319	0.9	385	0.9			218	4.571	GST06-2M□□□132C22	236
	315	1.9	379	1.8	554	1.6	221	4.643	GST07-2M □□□132C22	236
	313	1.7	377	1.6	551	1.4	226	4.667	GST09-1M □□□132C22	230
	281	1.7	339	1.6	494	1.4	248	5.200	GST07-2M □□□132C22	236
	274	0.8					253	5.324	GST06-2M□□□132C22	236
	258	1.7	311	1.6	454	1.4	274	5.667	GST09-1M □□□132C22	230
	256	1.7	308	1.6	450	1.4	272	5.714	GST07-2M □□□132C22	236
	228	1.5	275	1.4	402	1.3	305	6.400	GST07-2M □□□132C22	236
	204	1.4	246	1.4	359	1.2	340	7.150	GST07-2M □□□132C22	236
	200	3.2	241	3.0	352	2.7	348	7.305	GST09-2M □□□132C22	236
	182	3.0	219	2.8	320	2.5	382	8.027	GST09-2M □□□132C22	236
	180	1.4	217	1.3	316	1.2	387	8.125	GST07-2M □□□132C22	236
	166	1.3	200	1.2	292	1.1	419	8.800	GST07-2M □□□132C22	236
	162	2.6	195	2.5	285	2.2	429	9.010	GST09-2M □□□132C22	236
	148	1.2	179	1.1	261	1.0	469	9.856	GST07-2M □□□132C22	236
	142	2.4	171	2.3	250	2.0	489	10.267	GST09-2M □□□132C22	236
	130	1.1	157	1.1	230	0.9	533	11.200	GST07-2M □□□132C22	236
	125	2.2	151	2.1	220	1.8	555	11.667	GST09-2M □□□132C22	236
	118	2.1	142	2.0	208	1.8	588	12.362	GST09-2M □□□132C22	236
	116	1.0	140	1.0	204	0.8	598	12.571	GST07-2M □□□132C22	236
	104	1.9	125	1.8	183	1.6	669	14.048	GST09-2M □□□132C22	236
	102	0.9	123	0.9			680	14.286	GST07-2M □□□132C22	236
	96	1.9	116	1.9	170	1.8	721	15.156	GST09-2M □□□132C22	236
	95	0.9	114	0.9	167	0.8	733	15.400	GST07-2M □□□132C22	236
	85	1.7	102	1.7	149	1.6	820	17.222	GST09-2M □□□132C22	236
	83	0.8	101	0.8			833	17.500	GST07-2M □□□132C22	236
	72	2.9	87	2.9	127	2.7	966	20.289	GST11-2M □□□132C22	236
	71	1.5	86	1.5	125	1.4	977	20.533	GST09-2M □□□132C22	236

50 Hz: P_N=7.5 kW
60 Hz: P_N=9.0 kW
87 Hz: P_N=13.2 kW

n_N	1460 r/min		1760 r/min		2570 r/min		M_2 [Nm]	i		
f_N	50 Hz		60 Hz		87 Hz					
P_N	7.5 kW		9.0 kW		13.2 kW					
	n_2 [r/min]	c	n_2 [r/min]	c	n_2 [r/min]	c				
	63	1.4	75	1.4	110	1.3	1111	23.333	GST09-2M □□□132C22	236
	63	2.7	76	2.7	112	2.5	1097	23.056	GST11-2M □□□132C22	236
	59	1.3	71	1.3	103	1.3	1187	24.933	GST09-2M □□□132C22	236
	59	2.3	71	2.3	103	2.2	1187	24.933	GST11-2M □□□132C22	236
	52	1.1	62	1.1	91	1.1	1349	28.333	GST09-2M □□□132C22	236
	52	2.2	62	2.2	91	2.1	1349	28.333	GST11-2M □□□132C22	236
	45	1.8	55	1.8	80	1.7	1536	32.267	GST11-2M □□□132C22	236
	45	3.1	55	3.1	80	2.9	1536	32.267	GST14-2M □□□132C22	236
	40	1.7	48	1.7	70	1.6	1745	36.667	GST11-2M □□□132C22	236
	40	3.1	48	3.1	70	2.9	1745	36.667	GST14-2M □□□132C22	236
	37	1.5	45	1.5	66	1.4	1864	39.160	GST11-2M □□□132C22	236
	37	2.6	45	2.6	66	2.5	1864	39.160	GST14-2M □□□132C22	236
	36	1.3	43	1.3	63	1.3	1914	40.816	GST11-3M □□□132C22	242
	36	2.4	44	2.4	64	2.3	1884	40.185	GST14-3M □□□132C22	242
	34	2.1	41	2.1	60	2.1	1996	42.580	GST14-3M □□□132C22	242
	33	1.2	40	1.2	58	1.2	2063	44.000	GST11-3M □□□132C22	242
	33	1.4	40	1.4	58	1.4	2118	44.500	GST11-2M □□□132C22	236
	33	2.6	40	2.6	58	2.6	2118	44.500	GST14-2M □□□132C22	236
	30	1.9	36	1.9	52	1.9	2356	49.500	GST14-2M □□□132C22	236
	30	2.1	36	2.1	53	2.1	2268	48.386	GST14-3M □□□132C22	242
	29	1.2	35	1.2	51	1.2	2344	50.000	GST11-3M □□□132C22	242
	28	1.9	33	1.9	48	1.9	2492	53.148	GST14-3M □□□132C22	242
	26	1.9	31	1.9	46	1.9	2677	56.250	GST14-2M □□□132C22	236
	25	1.0	30	1.0	44	1.0	2718	57.968	GST11-3M □□□132C22	242
	25	1.9	30	1.9	43	1.9	2781	59.321	GST14-3M □□□132C22	242
	24	1.0	29	1.0	42	1.0	2871	61.250	GST11-3M □□□132C22	242
	21	1.5	26	1.5	37	1.5	3237	69.042	GST14-3M □□□132C22	242
	19	1.5	22	1.5	33	1.5	3678	78.457	GST14-3M □□□132C22	242
	16	1.3	19	1.3	28	1.3	4385	93.541	GST14-3M □□□132C22	242
	15	1.3	18	1.3	27	1.3	4508	96.157	GST14-3M □□□132C22	242
	14	1.2	17	1.2	24	1.2	4983	106.296	GST14-3M □□□132C22	242
	11	0.9	13	0.9	19	0.9	6526	139.211	GST14-3M □□□132C22	242
	11	1.0	14	1.0	20	1.0	6107	130.278	GST14-3M □□□132C22	242

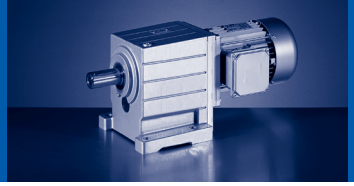

50 Hz: P_N=11.0 kW
60 Hz: P_N=13.2 kW
87 Hz: P_N=19.4 kW

n_N	1470 r/min		1770 r/min		2580 r/min		M_2 [Nm]	i		
f_N	50 Hz		60 Hz		87 Hz					
P_N	11.0 kW		13.2 kW		19.4 kW					
	n_2 [r/min]	c	n_2 [r/min]	c	n_2 [r/min]	c				
	942	2.5	1135	2.4	1654	2.1	110	1.560	GST09-1M □□□160C22	230
	905	0.9	1089	0.9			114	1.625	GST07-1M □□□160C22	230
	735	0.9	885	0.8			141	2.000	GST07-1M □□□160C22	230
	718	2.4	864	2.2	1260	2.0	144	2.048	GST09-1M □□□160C22	230
	656	0.9	790	0.8			158	2.240	GST07-1M □□□160C22	230
	630	2.3	759	2.1	1106	1.9	164	2.333	GST09-1M □□□160C22	230
	523	2.1	630	2.0	918	1.8	198	2.810	GST09-1M □□□160C22	230
	482	1.7	581	1.6	846	1.4	211	3.048	GST07-2M □□□160C22	236
	439	1.6	528	1.5	770	1.3	232	3.350	GST07-2M □□□160C22	236
	427	1.8	514	1.7	749	1.5	242	3.444	GST09-1M □□□160C22	230
	362	3.1	436	3.0	636	2.6	281	4.056	GST09-2M □□□160C22	236
	348	1.4	419	1.3	611	1.1	293	4.225	GST07-2M □□□160C22	236
	330	3.0	397	2.9	579	2.5	309	4.457	GST09-2M □□□160C22	236
	317	1.3	381	1.2	556	1.1	322	4.643	GST07-2M □□□160C22	236
	283	1.2	340	1.1	496	1.0	361	5.200	GST07-2M □□□160C22	236
	276	2.7	333	2.6	485	2.3	369	5.324	GST09-2M □□□160C22	236
	257	1.1	310	1.1	452	0.9	396	5.714	GST07-2M □□□160C22	236
	251	2.5	303	2.4	441	2.1	406	5.850	GST09-2M □□□160C22	236
	230	1.0	277	1.0	403	0.9	444	6.400	GST07-2M □□□160C22	236
	221	2.3	266	2.2	387	1.9	462	6.667	GST09-2M □□□160C22	236
	206	1.0	248	0.9	361	0.8	496	7.150	GST07-2M □□□160C22	236
	201	2.2	242	2.1	353	1.8	506	7.305	GST09-2M □□□160C22	236
	183	2.0	221	1.9	321	1.7	557	8.027	GST09-2M □□□160C22	236
	181	1.0	218	0.9			563	8.125	GST07-2M □□□160C22	236
	167	0.9	201	0.8			610	8.800	GST07-2M □□□160C22	236
	163	1.8	197	1.7	286	1.5	625	9.010	GST09-2M □□□160C22	236
	149	0.8					683	9.856	GST07-2M □□□160C22	236
	143	1.7	172	1.6	251	1.4	712	10.267	GST09-2M □□□160C22	236
	131	3.1	158	2.9	230	2.6	777	11.200	GST11-2M □□□160C22	236
	126	1.5	152	1.4	221	1.2	809	11.667	GST09-2M □□□160C22	236
	119	1.5	143	1.4	209	1.2	857	12.362	GST09-2M □□□160C22	236
	117	2.9	141	2.7	205	2.4	872	12.571	GST11-2M □□□160C22	236
	105	1.3	126	1.3	184	1.1	974	14.048	GST09-2M □□□160C22	236
	103	2.6	124	2.5	181	2.2	990	14.286	GST11-2M □□□160C22	236
	97	1.3	117	1.3	170	1.2	1051	15.156	GST09-2M □□□160C22	236
	96	2.5	115	2.5	168	2.4	1068	15.400	GST11-2M □□□160C22	236
	85	1.2	103	1.2	150	1.1	1194	17.222	GST09-2M □□□160C22	236
	84	2.3	101	2.3	147	2.2	1213	17.500	GST11-2M □□□160C22	236
	73	2.0	87	2.0	127	1.9	1407	20.289	GST11-2M □□□160C22	236
	65	3.2	78	3.2	113	3.0	1579	22.778	GST14-2M □□□160C22	236
	64	1.8	77	1.8	112	1.7	1598	23.056	GST11-2M □□□160C22	236

50 Hz: P_N=11.0 kW
60 Hz: P_N=13.2 kW
87 Hz: P_N=19.4 kW

n_N	1470 r/min		1770 r/min		2580 r/min		M_2 [Nm]	i		
f_N	50 Hz		60 Hz		87 Hz					
P_N	11.0 kW		13.2 kW		19.4 kW					
	n_2 [r/min]	c	n_2 [r/min]	c	n_2 [r/min]	c				
	60	3.1	72	3.1	105	2.9	1703	24.567	GST14-2M □□□160C22	236
	59	1.6	71	1.6	104	1.5	1729	24.933	GST11-2M □□□160C22	236
	53	2.8	63	2.8	92	2.6	1936	27.917	GST14-2M □□□160C22	236
	52	1.5	63	1.5	91	1.4	1964	28.333	GST11-2M □□□160C22	236
	46	2.4	55	2.4	80	2.3	2237	32.267	GST14-2M □□□160C22	236
	40	2.3	48	2.3	70	2.2	2542	36.667	GST14-2M □□□160C22	236
	38	2.0	45	2.0	66	1.9	2715	39.160	GST14-2M □□□160C22	236
	37	1.6	44	1.6	64	1.6	2744	40.185	GST14-3M □□□160C22	242
	35	1.5	42	1.5	61	1.5	2908	42.580	GST14-3M □□□160C22	242
	33	1.9	40	1.9	58	1.9	3085	44.500	GST14-2M □□□160C22	236
	30	1.5	37	1.5	53	1.5	3304	48.386	GST14-3M □□□160C22	242
	28	1.3	33	1.3	49	1.3	3630	53.148	GST14-3M □□□160C22	242
	25	1.3	30	1.3	44	1.3	4051	59.321	GST14-3M □□□160C22	242
	21	1.0	26	1.0	37	1.0	4715	69.042	GST14-3M □□□160C22	242
	19	1.0	23	1.0	33	1.0	5358	78.457	GST14-3M □□□160C22	242
	15	0.9	18	0.9	27	0.9	6567	96.157	GST14-3M □□□160C22	242

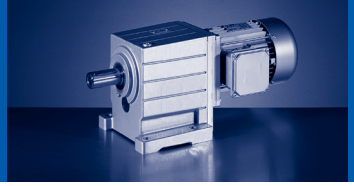

50 Hz: P_N=15.0 kW
60 Hz: P_N=18.0 kW
87 Hz: P_N=26.4 kW

n_N	1470 r/min		1770 r/min		2580 r/min		M_2 [Nm]	i		
f_N	50 Hz		60 Hz		87 Hz					
P_N	15.0 kW		18.0 kW		26.4 kW					
	n_2 [r/min]	c	n_2 [r/min]	c	n_2 [r/min]	c				
	942	1.9	1135	1.8	1654	1.5	150	1.560	GST09-1M □□□160C32	230
	718	1.7	864	1.6	1260	1.4	197	2.048	GST09-1M □□□160C32	230
	630	1.7	759	1.6	1106	1.4	224	2.333	GST09-1M □□□160C32	230
	523	1.6	630	1.5	918	1.3	270	2.810	GST09-1M □□□160C32	230
	482	1.2	581	1.2	846	1.0	288	3.048	GST07-2M □□□160C32	236
	439	1.2	528	1.1	770	1.0	317	3.350	GST07-2M □□□160C32	236
	427	1.3	514	1.3	749	1.1	331	3.444	GST09-1M □□□160C32	230
	362	2.3	436	2.2	636	1.9	384	4.056	GST09-2M □□□160C32	236
	348	1.0	419	0.9	611	0.8	399	4.225	GST07-2M □□□160C32	236
	330	2.2	397	2.1	579	1.8	421	4.457	GST09-2M □□□160C32	236
	317	0.9	381	0.9			439	4.643	GST07-2M □□□160C32	236
	283	0.9	340	0.8			492	5.200	GST07-2M □□□160C32	236
	276	2.0	333	1.9	485	1.7	503	5.324	GST09-2M □□□160C32	236
	276	3.2	333	3.0	485	2.6	503	5.324	GST11-2M □□□160C32	236
	257	0.8					540	5.714	GST07-2M □□□160C32	236
	251	1.8	303	1.7	441	1.5	553	5.850	GST09-2M □□□160C32	236
	251	3.2	303	3.0	441	2.7	553	5.850	GST11-2M □□□160C32	236
	230	3.0	277	2.8	403	2.5	605	6.400	GST11-2M □□□160C32	236
	221	1.7	266	1.6	387	1.4	630	6.667	GST09-2M □□□160C32	236
	214	3.2	258	3.0	376	2.7	649	6.864	GST11-2M □□□160C32	236
	201	1.6	242	1.5	353	1.3	691	7.305	GST09-2M □□□160C32	236
	189	2.9	227	2.7	331	2.4	737	7.800	GST11-2M □□□160C32	236
	183	1.5	221	1.4	321	1.3	759	8.027	GST09-2M □□□160C32	236
	163	1.3	197	1.3	286	1.1	852	9.010	GST09-2M □□□160C32	236
	163	2.7	197	2.5	286	2.2	852	9.010	GST11-2M □□□160C32	236
	149	2.5	180	2.4	262	2.1	932	9.856	GST11-2M □□□160C32	236
	143	1.2	172	1.2	251	1.0	971	10.267	GST09-2M □□□160C32	236
	131	2.3	158	2.1	230	1.9	1059	11.200	GST11-2M □□□160C32	236
	126	1.1	152	1.0	221	0.9	1103	11.667	GST09-2M □□□160C32	236
	119	1.1	143	1.0	209	0.9	1169	12.362	GST09-2M □□□160C32	236
	117	2.1	141	2.0	205	1.8	1189	12.571	GST11-2M □□□160C32	236
	105	1.0	126	0.9	184	0.8	1328	14.048	GST09-2M □□□160C32	236
	105	3.2	126	3.0	184	2.7	1328	14.048	GST14-2M □□□160C32	236
	103	1.9	124	1.8	181	1.6	1351	14.286	GST11-2M □□□160C32	236
	97	0.9	117	0.9	170	0.9	1433	15.156	GST09-2M □□□160C32	236
	97	3.1	117	3.1	170	3.0	1433	15.156	GST14-2M □□□160C32	236
	96	1.9	115	1.9	168	1.8	1456	15.400	GST11-2M □□□160C32	236
	85	0.8	103	0.8			1628	17.222	GST09-2M □□□160C32	236
	85	2.8	103	2.8	150	2.7	1628	17.222	GST14-2M □□□160C32	236
	84	1.7	101	1.7	147	1.6	1655	17.500	GST11-2M □□□160C32	236
	73	1.4	87	1.4	127	1.4	1918	20.289	GST11-2M □□□160C32	236

50 Hz: P_N=15.0 kW
60 Hz: P_N=18.0 kW
87 Hz: P_N=26.4 kW

n_N	1470 r/min		1770 r/min		2580 r/min		M_2 [Nm]	i		
f_N	50 Hz		60 Hz		87 Hz					
P_N	15.0 kW		18.0 kW		26.4 kW					
	n_2 [r/min]	c	n_2 [r/min]	c	n_2 [r/min]	c				
	73	2.6	88	2.6	129	2.5	1895	20.044	GST14-2M □□□160C32	236
	65	2.3	78	2.3	113	2.2	2153	22.778	GST14-2M □□□160C32	236
	64	1.3	77	1.3	112	1.3	2180	23.056	GST11-2M □□□160C32	236
	60	2.3	72	2.3	105	2.1	2323	24.567	GST14-2M □□□160C32	236
	59	1.2	71	1.2	104	1.1	2357	24.933	GST11-2M □□□160C32	236
	53	2.0	63	2.0	92	1.9	2639	27.917	GST14-2M □□□160C32	236
	52	1.1	63	1.1	91	1.0	2679	28.333	GST11-2M □□□160C32	236
	46	1.8	55	1.8	80	1.7	3051	32.267	GST14-2M □□□160C32	236
	40	1.7	48	1.7	70	1.6	3467	36.667	GST14-2M □□□160C32	236
	38	1.5	45	1.5	66	1.4	3702	39.160	GST14-2M □□□160C32	236
	37	1.2	44	1.2	64	1.1	3742	40.185	GST14-3M □□□160C32	242
	35	1.1	42	1.1	61	1.1	3965	42.580	GST14-3M □□□160C32	242
	33	1.4	40	1.4	58	1.4	4207	44.500	GST14-2M □□□160C32	236
	30	1.1	37	1.1	53	1.1	4506	48.386	GST14-3M □□□160C32	242
	28	1.0	33	1.0	49	1.0	4949	53.148	GST14-3M □□□160C32	242
	25	1.0	30	1.0	44	1.0	5524	59.321	GST14-3M □□□160C32	242

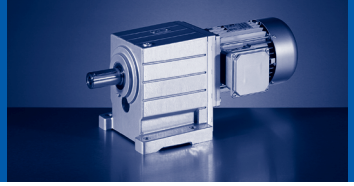

50 Hz: P_N=18.5 kW
60 Hz: P_N=22.2 kW
87 Hz: P_N=32.5 kW

n_N	1475 r/min		1775 r/min		2585 r/min		M_2 [Nm]	i		
f_N	50 Hz		60 Hz		87 Hz					
P_N	18.5 kW		22.2 kW		32.5 kW					
	n_2 [r/min]	c	n_2 [r/min]	c	n_2 [r/min]	c				
	946	1.5	1138	1.4	1657	1.3	184	1.560	GST09-1M □□□180C12	230
	720	1.4	867	1.3	1262	1.2	242	2.048	GST09-1M □□□180C12	230
	632	1.3	761	1.3	1108	1.1	275	2.333	GST09-1M □□□180C12	230
	525	1.3	632	1.2	920	1.1	332	2.810	GST09-1M □□□180C12	230
	428	1.1	515	1.0	751	0.9	406	3.444	GST09-1M □□□180C12	230
	364	1.9	438	1.8	637	1.6	471	4.056	GST09-2M □□□180C12	236
	364	2.8	438	2.7	637	2.4	471	4.056	GST11-2M □□□180C12	236
	331	1.8	398	1.7	580	1.5	518	4.457	GST09-2M □□□180C12	236
	331	2.8	398	2.7	580	2.4	518	4.457	GST11-2M □□□180C12	236
	284	2.8	341	2.7	497	2.4	604	5.200	GST14-2M □□□180C12	236
	277	1.6	333	1.5	486	1.3	619	5.324	GST09-2M □□□180C12	236
	277	2.6	333	2.4	486	2.2	619	5.324	GST11-2M □□□180C12	236
	258	2.8	311	2.7	452	2.4	664	5.714	GST14-2M □□□180C12	236
	252	1.5	303	1.4	442	1.3	680	5.850	GST09-2M □□□180C12	236
	252	2.6	303	2.5	442	2.2	680	5.850	GST11-2M □□□180C12	236
	235	2.8	282	2.7	411	2.4	730	6.286	GST14-2M □□□180C12	236
	231	2.4	277	2.3	404	2.0	744	6.400	GST11-2M □□□180C12	236
	221	1.4	266	1.3	388	1.2	775	6.667	GST09-2M □□□180C12	236
	215	2.6	259	2.5	377	2.2	798	6.864	GST11-2M □□□180C12	236
	202	1.3	243	1.2	354	1.1	849	7.305	GST09-2M □□□180C12	236
	189	2.3	228	2.2	331	1.9	906	7.800	GST11-2M □□□180C12	236
	184	1.2	221	1.2	322	1.0	933	8.027	GST09-2M □□□180C12	236
	184	2.8	221	2.7	322	2.4	933	8.027	GST14-2M □□□180C12	236
	168	2.8	202	2.7	294	2.4	1023	8.800	GST14-2M □□□180C12	236
	164	1.1	197	1.0	287	0.9	1047	9.010	GST09-2M □□□180C12	236
	164	2.2	197	2.0	287	1.8	1047	9.010	GST11-2M □□□180C12	236
	150	2.0	180	1.9	262	1.7	1145	9.856	GST11-2M □□□180C12	236
	150	2.7	180	2.5	263	2.2	1144	9.841	GST14-2M □□□180C12	236
	144	1.0	173	0.9	252	0.8	1193	10.267	GST09-2M □□□180C12	236
	134	2.8	161	2.7	235	2.4	1278	11.000	GST14-2M □□□180C12	236
	132	1.8	159	1.7	231	1.5	1302	11.200	GST11-2M □□□180C12	236
	126	0.9	152	0.8			1356	11.667	GST09-2M □□□180C12	236
	119	0.9	144	0.8			1437	12.362	GST09-2M □□□180C12	236
	119	2.8	144	2.7	209	2.4	1437	12.362	GST14-2M □□□180C12	236
	117	1.7	141	1.6	206	1.4	1461	12.571	GST11-2M □□□180C12	236
	105	2.6	126	2.5	184	2.2	1632	14.048	GST14-2M □□□180C12	236
	103	1.6	124	1.5	181	1.3	1660	14.286	GST11-2M □□□180C12	236
	97	2.5	117	2.5	171	2.4	1761	15.156	GST14-2M □□□180C12	236
	96	1.5	115	1.5	168	1.4	1790	15.400	GST11-2M □□□180C12	236
	86	2.3	103	2.3	150	2.2	2001	17.222	GST14-2M □□□180C12	236
	84	1.4	101	1.4	148	1.3	2034	17.500	GST11-2M □□□180C12	236

50 Hz: P_N=18.5 kW
60 Hz: P_N=22.2 kW
87 Hz: P_N=32.5 kW

n_N	1475 r/min		1775 r/min		2585 r/min		M_2 [Nm]	i		
f_N	50 Hz		60 Hz		87 Hz					
P_N	18.5 kW		22.2 kW		32.5 kW					
	n_2 [r/min]	c	n_2 [r/min]	c	n_2 [r/min]	c				
	74	2.1	89	2.1	129	2.0	2329	20.044	GST14-2M □□□180C12	236
	73	1.2	88	1.2	127	1.1	2358	20.289	GST11-2M □□□180C12	236
	65	1.9	78	1.9	114	1.8	2647	22.778	GST14-2M □□□180C12	236
	64	1.1	77	1.1	112	1.0	2679	23.056	GST11-2M □□□180C12	236
	60	1.8	72	1.8	105	1.7	2855	24.567	GST14-2M □□□180C12	236
	59	1.0	71	1.0	104	0.9	2897	24.933	GST11-2M □□□180C12	236
	53	1.7	64	1.7	93	1.6	3244	27.917	GST14-2M □□□180C12	236
	52	0.9	63	0.9	91	0.8	3293	28.333	GST11-2M □□□180C12	236
	46	1.4	55	1.4	80	1.4	3750	32.267	GST14-2M □□□180C12	236
	40	1.4	48	1.4	71	1.3	4261	36.667	GST14-2M □□□180C12	236
	38	1.2	45	1.2	66	1.1	4551	39.160	GST14-2M □□□180C12	236
	37	1.0	44	1.0	64	0.9	4600	40.185	GST14-3M □□□180C12	242
	35	0.9	42	0.9	61	0.9	4874	42.580	GST14-3M □□□180C12	242
	33	1.1	40	1.1	58	1.1	5171	44.500	GST14-2M □□□180C12	236
	31	0.9	37	0.9	53	0.9	5538	48.386	GST14-3M □□□180C12	242

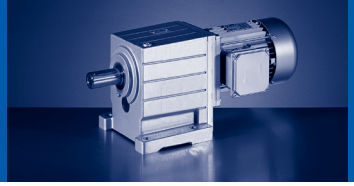

50 Hz: P_N=22.0 kW
60 Hz: P_N=26.4 kW
87 Hz: P_N=38.7 kW

n_N	1470 r/min		1770 r/min		2580 r/min		M_2 [Nm]	i		
f_N	50 Hz		60 Hz		87 Hz					
P_N	22.0 kW		26.4 kW		38.7 kW					
	n_2 [r/min]	c	n_2 [r/min]	c	n_2 [r/min]	c				
	942	1.3	1135	1.2	1654	1.1	220	1.560	GST09-1M □□□180C32	230
	718	1.2	864	1.1	1260	1.0	288	2.048	GST09-1M □□□180C32	230
	630	1.1	759	1.1	1106	0.9	329	2.333	GST09-1M □□□180C32	230
	523	1.1	630	1.0	918	0.9	396	2.810	GST09-1M □□□180C32	230
	427	0.9	514	0.9			485	3.444	GST09-1M □□□180C32	230
	362	1.6	436	1.5	636	1.3	562	4.056	GST09-2M □□□180C32	236
	362	2.7	436	2.5	636	2.2	562	4.056	GST11-2M □□□180C32	236
	330	1.5	397	1.4	579	1.3	618	4.457	GST09-2M □□□180C32	236
	330	2.6	397	2.5	579	2.2	618	4.457	GST11-2M □□□180C32	236
	283	3.2	340	3.0	496	2.6	721	5.200	GST14-2M □□□180C32	236
	276	1.4	333	1.3	485	1.1	738	5.324	GST09-2M □□□180C32	236
	276	2.2	333	2.0	485	1.8	738	5.324	GST11-2M □□□180C32	236
	257	3.2	310	3.0	452	2.6	792	5.714	GST14-2M □□□180C32	236
	251	1.3	303	1.2	441	1.1	811	5.850	GST09-2M □□□180C32	236
	251	2.2	303	2.1	441	1.8	811	5.850	GST11-2M □□□180C32	236
	234	3.1	282	2.9	411	2.6	872	6.286	GST14-2M □□□180C32	236
	230	2.0	277	1.9	403	1.7	887	6.400	GST11-2M □□□180C32	236
	221	1.2	266	1.1	387	1.0	924	6.667	GST09-2M □□□180C32	236
	214	2.2	258	2.1	376	1.8	952	6.864	GST11-2M □□□180C32	236
	201	1.1	242	1.0	353	0.9	1013	7.305	GST09-2M □□□180C32	236
	189	2.0	227	1.9	331	1.6	1082	7.800	GST11-2M □□□180C32	236
	183	1.0	221	1.0	321	0.9	1113	8.027	GST09-2M □□□180C32	236
	183	2.9	221	2.8	321	2.4	1113	8.027	GST14-2M □□□180C32	236
	167	3.1	201	2.9	293	2.6	1220	8.800	GST14-2M □□□180C32	236
	163	0.9	197	0.9			1249	9.010	GST09-2M □□□180C32	236
	163	1.8	197	1.7	286	1.5	1249	9.010	GST11-2M □□□180C32	236
	149	1.7	180	1.6	262	1.4	1367	9.856	GST11-2M □□□180C32	236
	149	2.6	180	2.5	262	2.2	1365	9.841	GST14-2M □□□180C32	236
	143	0.8					1424	10.267	GST09-2M □□□180C32	236
	134	2.6	161	2.4	235	2.2	1525	11.000	GST14-2M □□□180C32	236
	131	1.5	158	1.5	230	1.3	1553	11.200	GST11-2M □□□180C32	236
	119	2.4	143	2.3	209	2.0	1714	12.362	GST14-2M □□□180C32	236
	117	1.5	141	1.4	205	1.2	1743	12.571	GST11-2M □□□180C32	236
	105	2.2	126	2.1	184	1.8	1948	14.048	GST14-2M □□□180C32	236
	103	1.3	124	1.2	181	1.1	1981	14.286	GST11-2M □□□180C32	236
	97	2.1	117	2.1	170	2.0	2102	15.156	GST14-2M □□□180C32	236
	96	1.3	115	1.3	168	1.2	2135	15.400	GST11-2M □□□180C32	236
	85	1.9	103	1.9	150	1.8	2388	17.222	GST14-2M □□□180C32	236
	84	1.1	101	1.1	147	1.1	2427	17.500	GST11-2M □□□180C32	236
	73	1.0	87	1.0	127	0.9	2813	20.289	GST11-2M □□□180C32	236
	73	1.8	88	1.8	129	1.7	2779	20.044	GST14-2M □□□180C32	236

50 Hz: P_N=22.0 kW
60 Hz: P_N=26.4 kW
87 Hz: P_N=38.7 kW

n_N	1470 r/min		1770 r/min		2580 r/min		M_2 [Nm]	i		
f_N	50 Hz		60 Hz		87 Hz					
P_N	22.0 kW		26.4 kW		38.7 kW					
	n_2 [r/min]	c	n_2 [r/min]	c	n_2 [r/min]	c				
	65	1.6	78	1.6	113	1.5	3158	22.778	GST14-2M □□□180C32	236
	64	0.9	77	0.9	112	0.9	3197	23.056	GST11-2M □□□180C32	236
	60	1.5	72	1.5	105	1.5	3406	24.567	GST14-2M □□□180C32	236
	59	0.8	71	0.8			3457	24.933	GST11-2M □□□180C32	236
	53	1.4	63	1.4	92	1.3	3871	27.917	GST14-2M □□□180C32	236
	46	1.2	55	1.2	80	1.2	4474	32.267	GST14-2M □□□180C32	236
	40	1.1	48	1.1	70	1.1	5084	36.667	GST14-2M □□□180C32	236
	38	1.0	45	1.0	66	1.0	5430	39.160	GST14-2M □□□180C32	236
	37	0.8	44	0.8			5489	40.185	GST14-3M □□□180C32	242
	33	0.9	40	0.9	58	0.9	6170	44.500	GST14-2M □□□180C32	236

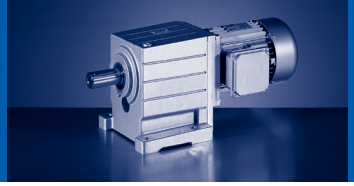

50 Hz: P_N=30.0 kW
60 Hz: P_N=36.0 kW
87 Hz: P_N=52.7 kW

n_N	1465 r/min		1765 r/min		2575 r/min		M_2 [Nm]	i		
f_N	50 Hz		60 Hz		87 Hz					
P_N	30.0 kW		36.0 kW		52.7 kW					
	n_2 [r/min]	c	n_2 [r/min]	c	n_2 [r/min]	c				
	939	0.9	1131	0.9			301	1.560	GST09-1M □□□180C42	230
	716	0.9	862	0.8			394	2.048	GST09-1M □□□180C42	230
	628	0.8					449	2.333	GST09-1M □□□180C42	230
	361	1.1	435	1.1			770	4.056	GST09-2M □□□180C42	236
	361	1.9	435	1.8			770	4.056	GST11-2M □□□180C42	236
	329	1.1	396	1.0			846	4.457	GST09-2M □□□180C42	236
	329	1.9	396	1.8			846	4.457	GST11-2M □□□180C42	236
	282	2.3	339	2.2			987	5.200	GST14-2M □□□180C42	236
	275	1.0	332	0.9			1010	5.324	GST09-2M □□□180C42	236
	275	1.6	332	1.5			1010	5.324	GST11-2M □□□180C42	236
	256	2.3	309	2.2			1084	5.714	GST14-2M □□□180C42	236
	250	0.9	302	0.9			1110	5.850	GST09-2M □□□180C42	236
	250	1.6	302	1.5			1110	5.850	GST11-2M □□□180C42	236
	233	2.3	281	2.2			1193	6.286	GST14-2M □□□180C42	236
	229	1.5	276	1.4			1214	6.400	GST11-2M □□□180C42	236
	220	0.8					1265	6.667	GST09-2M □□□180C42	236
	213	1.6	257	1.5			1302	6.864	GST11-2M □□□180C42	236
	188	1.4	226	1.4			1480	7.800	GST11-2M □□□180C42	236
	183	2.1	220	2.0			1523	8.027	GST14-2M □□□180C42	236
	167	2.2	201	2.1			1670	8.800	GST14-2M □□□180C42	236
	163	1.3	196	1.3			1709	9.010	GST11-2M □□□180C42	236
	149	1.2	179	1.2			1870	9.856	GST11-2M □□□180C42	236
	149	1.9	179	1.8			1867	9.841	GST14-2M □□□180C42	236
	133	1.9	161	1.8			2087	11.000	GST14-2M □□□180C42	236
	131	1.1	158	1.1			2125	11.200	GST11-2M □□□180C42	236
	119	1.8	143	1.7			2345	12.362	GST14-2M □□□180C42	236
	117	1.1	140	1.0			2385	12.571	GST11-2M □□□180C42	236
	104	1.6	126	1.5			2665	14.048	GST14-2M □□□180C42	236
	103	1.0	124	0.9			2710	14.286	GST11-2M □□□180C42	236
	97	1.6	117	1.6			2875	15.156	GST14-2M □□□180C42	236
	95	0.9	115	0.9			2922	15.400	GST11-2M □□□180C42	236
	85	1.4	103	1.4			3268	17.222	GST14-2M □□□180C42	236
	84	0.8	101	0.8			3320	17.500	GST11-2M □□□180C42	236
	73	1.3	88	1.3			3803	20.044	GST14-2M □□□180C42	236
	64	1.2	78	1.2			4322	22.778	GST14-2M □□□180C42	236
	60	1.1	72	1.1			4661	24.567	GST14-2M □□□180C42	236
	53	1.0	63	1.0			5297	27.917	GST14-2M □□□180C42	236
	45	0.9	55	0.9			6122	32.267	GST14-2M □□□180C42	236
	40	0.8	48	0.8			6957	36.667	GST14-2M □□□180C42	236

50 Hz: P_N=37.0 kW
60 Hz: P_N=45.0 kW
87 Hz: P_N=64.0 kW

n_N	1483 r/min		1783 r/min		2593 r/min		M_2 [Nm]	i		
f_N	50 Hz		60 Hz		87 Hz					
P_N	37.0 kW		45.0 kW		64.0 kW					
	n_2 [r/min]	c	n_2 [r/min]	c	n_2 [r/min]	c				
	366	1.6	440	1.5			938	4.056	GST11-2M □□□225C12	236
	351	2.8	422	2.6			977	4.225	GST14-2M □□□225C12	236
	333	1.6	400	1.5			1030	4.457	GST11-2M □□□225C12	236
	319	2.7	384	2.6			1073	4.643	GST14-2M □□□225C12	236
	285	2.5	343	2.4			1202	5.200	GST14-2M □□□225C12	236
	279	1.3	335	1.2			1231	5.324	GST11-2M □□□225C12	236
	260	2.5	312	2.3			1321	5.714	GST14-2M □□□225C12	236
	254	1.3	305	1.2			1352	5.850	GST11-2M □□□225C12	236
	236	2.3	284	2.2			1453	6.286	GST14-2M □□□225C12	236
	232	1.2	279	1.2			1479	6.400	GST11-2M □□□225C12	236
	216	1.3	260	1.2			1587	6.864	GST11-2M □□□225C12	236
	207	2.1	249	2.0			1653	7.150	GST14-2M □□□225C12	236
	190	1.2	229	1.1			1803	7.800	GST11-2M □□□225C12	236
	185	2.0	222	1.9			1856	8.027	GST14-2M □□□225C12	236
	169	1.8	203	1.7			2034	8.800	GST14-2M □□□225C12	236
	165	1.1	198	1.0			2083	9.010	GST11-2M □□□225C12	236
	151	1.0	181	1.0			2278	9.856	GST11-2M □□□225C12	236
	151	1.7	181	1.6			2275	9.841	GST14-2M □□□225C12	236
	135	1.6	162	1.5			2543	11.000	GST14-2M □□□225C12	236
	132	0.9	159	0.9			2589	11.200	GST11-2M □□□225C12	236
	120	1.5	144	1.4			2858	12.362	GST14-2M □□□225C12	236
	118	0.9	142	0.8			2906	12.571	GST11-2M □□□225C12	236
	106	1.3	127	1.2			3247	14.048	GST14-2M □□□225C12	236
	98	1.3	118	1.3			3503	15.156	GST14-2M □□□225C12	236
	86	1.2	104	1.2			3981	17.222	GST14-2M □□□225C12	236
	74	1.1	89	1.1			4633	20.044	GST14-2M □□□225C12	236
	65	1.0	78	1.0			5265	22.778	GST14-2M □□□225C12	236

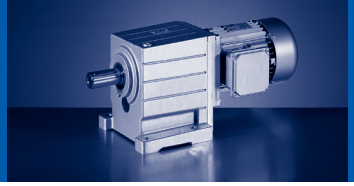

50 Hz: P_N=45.0 kW
60 Hz: P_N=54.0 kW
87 Hz: P_N=78.0 kW

n_N	1480 r/min		1780 r/min		2590 r/min		M_2 [Nm]	i		
f_N	50 Hz		60 Hz		87 Hz					
P_N	45.0 kW		54.0 kW		78.0 kW					
	n_2 [r/min]	c	n_2 [r/min]	c	n_2 [r/min]	c				
	365	1.3	439	1.2			1143	4.056	GST11-2M □□□225C22	236
	350	2.3	421	2.2			1190	4.225	GST14-2M □□□225C22	236
	332	1.3	399	1.2			1256	4.457	GST11-2M □□□225C22	236
	319	2.2	383	2.1			1308	4.643	GST14-2M □□□225C22	236
	285	2.1	342	2.0			1465	5.200	GST14-2M □□□225C22	236
	278	1.1	334	1.0			1500	5.324	GST11-2M □□□225C22	236
	259	2.0	312	1.9			1610	5.714	GST14-2M □□□225C22	236
	253	1.1	304	1.0			1648	5.850	GST11-2M □□□225C22	236
	236	1.9	283	1.8			1771	6.286	GST14-2M □□□225C22	236
	231	1.0	278	0.9			1803	6.400	GST11-2M □□□225C22	236
	216	1.1	259	1.0			1934	6.864	GST11-2M □□□225C22	236
	207	1.7	249	1.6			2014	7.150	GST14-2M □□□225C22	236
	190	1.0	228	0.9			2197	7.800	GST11-2M □□□225C22	236
	184	1.7	222	1.6			2261	8.027	GST14-2M □□□225C22	236
	168	1.5	202	1.4			2479	8.800	GST14-2M □□□225C22	236
	164	0.9	198	0.8			2538	9.010	GST11-2M □□□225C22	236
	150	0.8					2777	9.856	GST11-2M □□□225C22	236
	150	1.4	181	1.3			2772	9.841	GST14-2M □□□225C22	236
	135	1.3	162	1.2			3099	11.000	GST14-2M □□□225C22	236
	120	1.2	144	1.1			3482	12.362	GST14-2M □□□225C22	236
	105	1.1	127	1.0			3957	14.048	GST14-2M □□□225C22	236
	98	1.1	117	1.1			4269	15.156	GST14-2M □□□225C22	236
	86	0.9	103	0.9			4852	17.222	GST14-2M □□□225C22	236
	74	0.9	89	0.9			5647	20.044	GST14-2M □□□225C22	236

GST□□-1M VBR

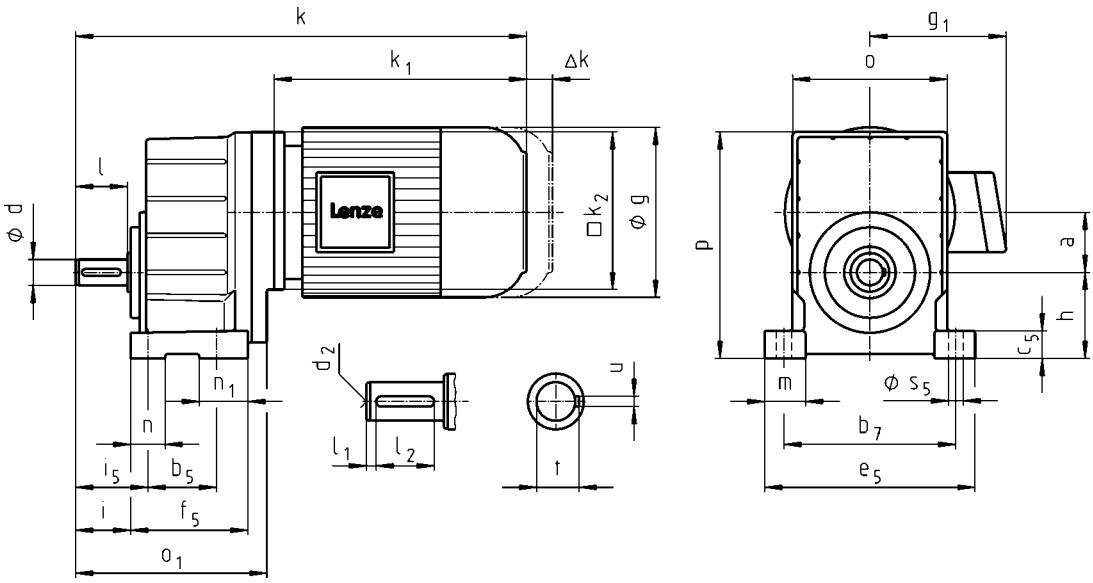

		063C11 063C12 063C31 063C32	063C42	071C11	071C13 071C31 071C32 071C33 071C42	080C11 080C13 080C31 080C32 080C33 080C42	090C11 090C31	090C32
g		123		139		156	176	
g_1	MDEMAXX	100		109		141	146	
	MDEMABR	107		118		132	137	
k_1	MDEMAXX	187		207		224.5	274	248
k_2		120				145	180	
Δ k	MDEMABR	40		52		73	68	
	MDFMAXX	128						
	MDFMABR	170		165		183	181	
		k						
GST04		331		351		373	433	407
GST05			352	372		394	454	428
GST06			375		395	417	477	451
GST07						446	506	480
GST09							549	523

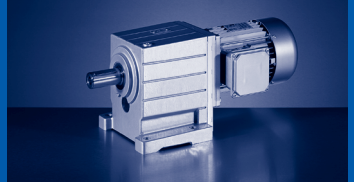

		100C12 100C31 100C32 100C41	112C22 112C31	112C32 112C41	132C21 132C22 132C32	160C22	160C32	180C12 180C32	180C42
g		194	218		258	310		348	
g_1	MDEMAXX	157	167		195	210		230	
	MDEMABR	147	158		187	210		230	
k_1	MDEMAXX	309	319	363	403	457.5	501.5	561	618
k_2		180	222		265	300			
Δ k	MDEMABR	76	90		109.5	105		113	
	MDFMAXX	109	102		115	149			155
	MDFMABR	170	183		201.5	179		215	
		k							
GST05		489							
GST06		512	528	572					
GST07		541	557	601	649	708			
GST09		584	600	644	692	751	795	855	912

	a	h[1)]	o[1)]	p[1)]
GST04	36	50	100	138
GST05	45	63	115	168
GST06	56	80	145	211
GST07	70	100	180	264
GST09	89	125	222	329

	d	d_2	l	l_1	l_2	u	t	i	i_5	o_1	b_5	b_7	c_5	e_5	f_5	m	n	n_1	s_5
	k6																		
GST04	16	M5	32	6	20	5	18	35	45	134	55	105	17	128	80	24	20	25	9
GST05	20	M6	40	6	28	6	22.5	43	56	165	70	125	22	154	99	32	26	29	11
GST06	25	M10	50	4	40	8	28	53	68	191	72	160	27	194	115	37	30	43	13.5
GST07	30	M10	60	7.5	45	8	33	64	84	223	80	200	35	245	137	48	40	57	18
GST09	40	M16	80	8.5	63	12	43	84	107	271	105	245	43	296	161	51	45	56	18

[1)] k_2 !

GST□□-1M VCR

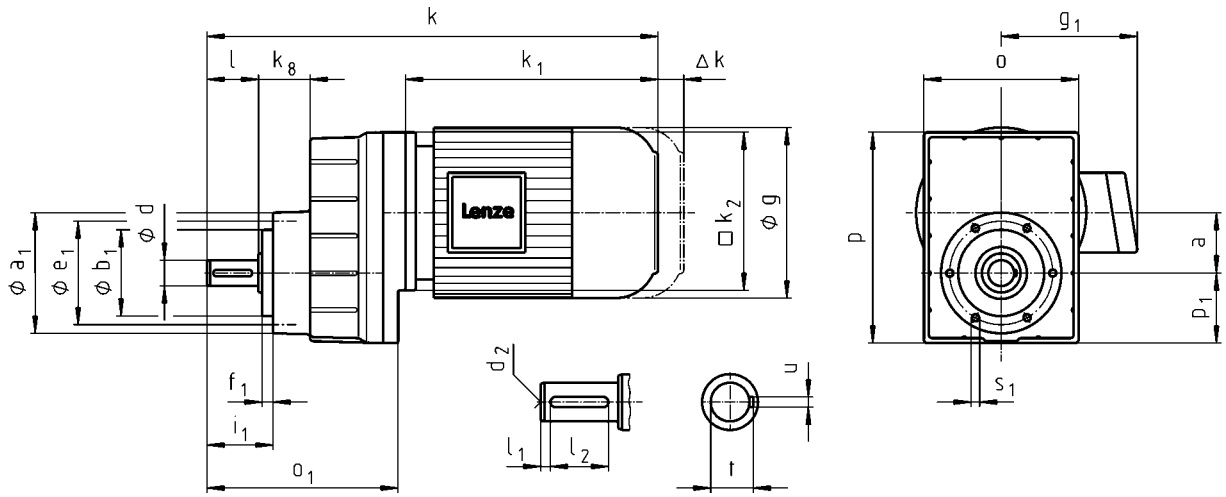

		063C11 063C12 063C31 063C32	063C42	071C11	071C13 071C31 071C32 071C33 071C42	080C11 080C13 080C31 080C32 080C33 080C42	090C11 090C31	090C32
g		123		139		156	176	
g_1	MDEMAXX	100		109		141	146	
	MDEMABR	107		118		132	137	
k_1	MDEMAXX	187		207		224.5	274	248
k_2		120				145	180	
Δ k	MDEMABR	40		52		73	68	
	MDFMAXX	128						
	MDFMABR	170		165		183	181	
		k						
GST04		331		351		373	433	407
GST05			352	372		394	454	428
GST06			375		395	417	477	451
GST07						446	506	480
GST09							549	523

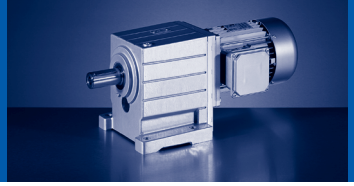

		100C12 100C31 100C32 100C41	112C22 112C31	112C32 112C41	132C21 132C22 132C32	160C22	160C32	180C12 180C32	180C42
g		194	218		258	310		348	
g_1	MDEMAXX	157	167		195	210		230	
	MDEMABR	147	158		187	210		230	
k_1	MDEMAXX	309	319	363	403	457.5	501.5	561	618
k_2		180	222		265	300			
Δ k	MDEMABR	76	90		109.5	105		113	
	MDFMAXX	109	102		115	149			155
	MDFMABR	170	183		201.5	179		215	
		k							
GST05		489							
GST06		512	528	572					
GST07		541	557	601	649	708			
GST09		584	600	644	692	751	795	855	912

	a	k_8	o[1)]	p[1)]	p_1
GST04	36	35	100	129	41
GST05	45	43	115	156	51
GST06	56	48	145	194	63
GST07	70	60	180	245	82
GST09	89	74	222	304	101

	d	d_2	l	l_1	l_2	u	t	i_1	o_1	a_1	b_1	e_1	f_1	s_1
	k6										h7			
GST04	16	M5	32	6	20	5	18	43	134	72	48	61	8	M5x10
GST05	20	M6	40	6	28	6	22.5	52	165	88	58	74	9	M6x10
GST06	25	M10	50	4	40	8	28	64	191	109	70	90	11	M8x14
GST07	30	M10	60	7.5	45	8	33	77	223	140	100	120	13	M10x18
GST09	40	M16	80	8.5	63	12	43	100	271	174	120	145	15	M12x20

[1)] k_2 !

GST□□-1M VCK

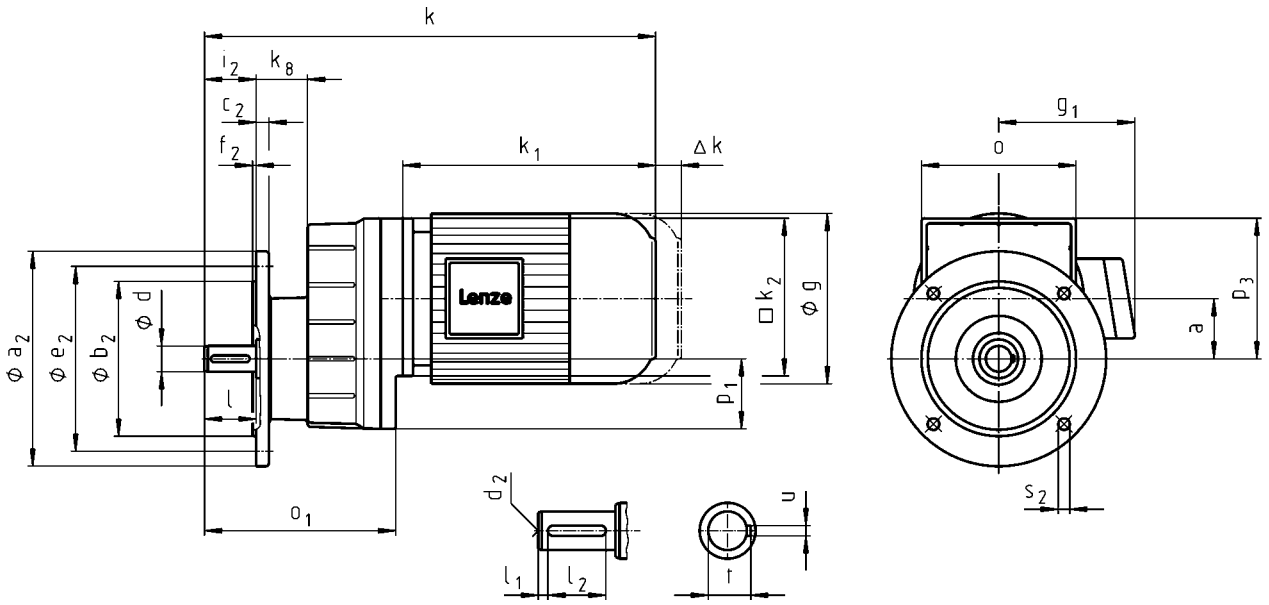

		063C11 063C12 063C31 063C32	063C42	071C11	071C13 071C31 071C32 071C33 071C42	080C11 080C13 080C31 080C32 080C33 080C42	090C11 090C31	090C32
g		123		139		156	176	
g_1	MDEMAXX	100		109		141	146	
	MDEMABR	107		118		132	137	
k_1	MDEMAXX	187		207		224.5	274	248
k_2		120				145	180	
Δk	MDEMABR	40		52		73	68	
	MDFMAXX	128						
	MDFMABR	170		165		183	181	
		k						
GST04		331		351		373	433	407
GST05			352	372		394	454	428
GST06			375		395	417	477	451
GST07						446	506	480
GST09							549	523

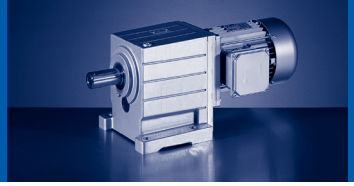

		100C12 100C31 100C32 100C41	112C22 112C31	112C32 112C41	132C21 132C22 132C32	160C22	160C32	180C12 180C32	180C42
g		194	218		258	310		348	
g_1	MDEMAXX	157	167		195	210		230	
	MDEMABR	147	158		187	210		230	
k_1	MDEMAXX	309	319	363	403	457.5	501.5	561	618
k_2		180	222		265	300			
Δ k	MDEMABR	76	90		109.5	105		113	
	MDFMAXX	109	102		115	149			155
	MDFMABR	170	183		201.5	179		215	
		k							
GST05		489							
GST06		512	528	572					
GST07		541	557	601	649	708			
GST09		584	600	644	692	751	795	855	912

	a	k_8	o[1]	p_1	p_3[1]
GST04	36	35	100	41	88
GST05	45	43	115	51	105
GST06	56	48	145	63	131
GST07	70	60	180	82	164
GST09	89	74	222	101	204

	d	d_2	l	l_1	l_2	u	t	i_2	o_1	a_2	b_2	c_2	e_2	f_2	s_2
	k6										j7				
GST04	16	M5	32	6	20	5	18	32	134	120 140 160	80 95 110	10 10 10	100 115 130	3 3 3.5	7 9 9
GST05	20	M6	40	6	28	6	22.5	40	165	120 140 160 200	80 95 110 130	10 10 10 12	100 115 130 165	3 3 3.5 3.5	7 9 9 11
GST06	25	M10	50	4	40	8	28	50	191	160 200	110 130	12 12	130 165	3.5 3.5	9 11
GST07	30	M10	60	7.5	45	8	33	60	223	200 250	130 180	14 15	165 215	3.5 4	11 13.5
GST09	40	M16	80	8.5	63	12	43	80	271	250 300	180 230	16 18	215 265	4 4	13.5 13.5

[1] k_2 !

GST□□-2M VBR

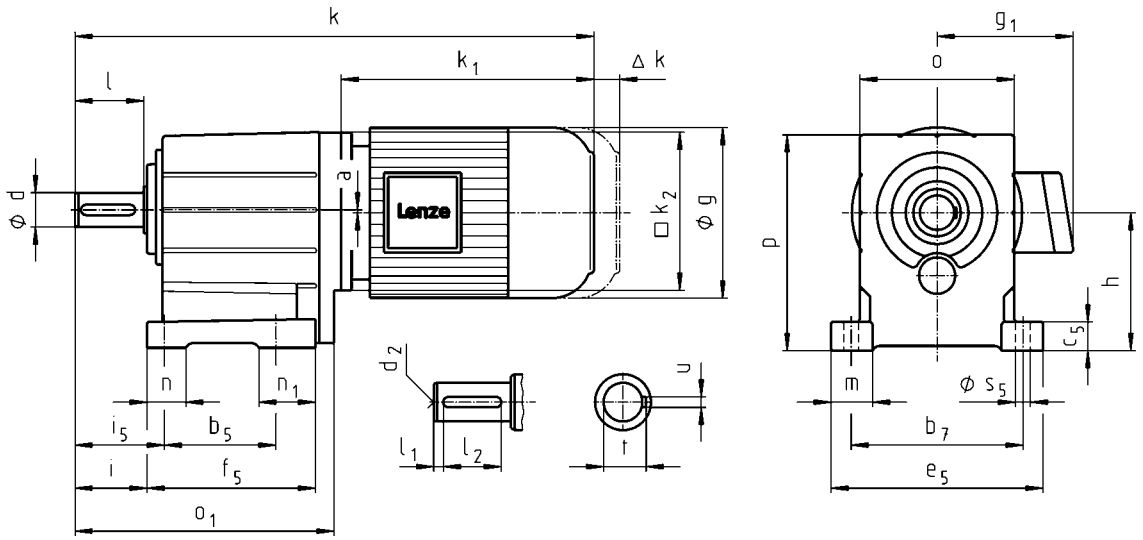

		063C02	063C11	063C12	063C22	063C31	063C32	063C42	071C11	071C13 071C31	071C32	071C33	071C42	080C11	080C13 080C31 080C32 080C33 080C42
g		123							139					156	
g_1	MDEMAXX MDSMAXX	100							109					141	
	MDEMABR MDSMABR	107							118					132	
k_1	MDEMAXX MDSMAXX	156	187		156	187			207					224.5	
k_2		100	120		100	120								145	
Δ k	MDEMABR MDSMABR	71	40		71	40			52					73	
	MDFMAXX		128			128									
	MDFMABR		170			170			165					183	
		k													
GST03		298		329	298		329				349		349		
GST04			371			371			391					413	
GST05								401	421					443	
GST06								427		447				469	
GST07															525

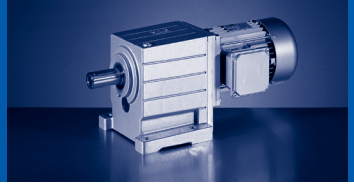

		090C11	090C31	090C32	100C12	100C31	100C32 100C41	112C22 112C31	112C32 112C41	132C21 132C22 132C32	160C22	160C32	180C12 180C32	180C42	225C12 225C22
g		176			194			218		258	310		348		447
g_1	MDEMAXX MDSMAXX	146			157			167		195	210		230		346
	MDEMABR MDSMABR	137			147			158		187	210		230		346
k_1	MDEMAXX MDSMAXX	274		248	309			319	363	403	457.5	501.5	561	618	848
k_2		180						222		265	300				
Δ k	MDEMABR MDSMABR	68			76			90		109.5	105		113		
	MDFMAXX	128			109			102		115	149			155	213
	MDFMABR	181			170			183		201.5	179		215		213
		k													
GST04		473		447											
GST05		503		477	538										
GST06		529		503	564			580	624						
GST07		585		559	620			636	680	728	787	831			
GST09			648	622	683			699	743	791	850	894	954	1011	
GST11					740		740	756	800	848	907	951	1011	1068	1298
GST14								846	890	938	997	1041	1101	1158	1388

	a	h[1]	o[1]	p[1]
GST03	2	65	90	101
GST04	0	80	100	132
GST05	1	100	115	158.5
GST06	2	125	145	198
GST07	3	160	180	251
GST09	4	200	222	311
GST11	4	250	270	385
GST14	6	315	328	479

	d	d	d_2	l	l_1	l_2	u	t	i	i_5	o_1	b_5	b_7	c_5	e_5	f_5	m	n	n_1	s_5
	k6	m6																		
GST03	14 20		M5 M6	28 40	4 5	20 28	5 6	16 22.5	34 46	40 52	127 139	60	91	11	105	84	20			6.6
GST04	20		M6	40	5	28	6	22.5	43	53	174	76	105	18	129	112	24.5	20	36	9
GST05	25		M10	50	4	40	8	28	53	66	214	90	125	23	155	139	32.5	26	49	11
GST06	30		M10	60	6	45	8	33	64	79	243	106	160	28	196	157	38	35	52	13.5
GST07	40		M16	80	7	63	12	43	84	104	302	130	200	34	247	196	48.5	45	66	18
GST09	50		M16	100	8	80	14	53.5	105	127.5	370	165	245	44	298	239	54	48	74	18
GST11		60	M20	120	8	100	18	64	125	155	433	200	300	54	368	280	69	65	80	22
GST14		80	M20	160	15	125	22	85	165	200	533	250	380	65	460	340	85	85	91	26

[1] k_2 !

GST□□-2M VCR

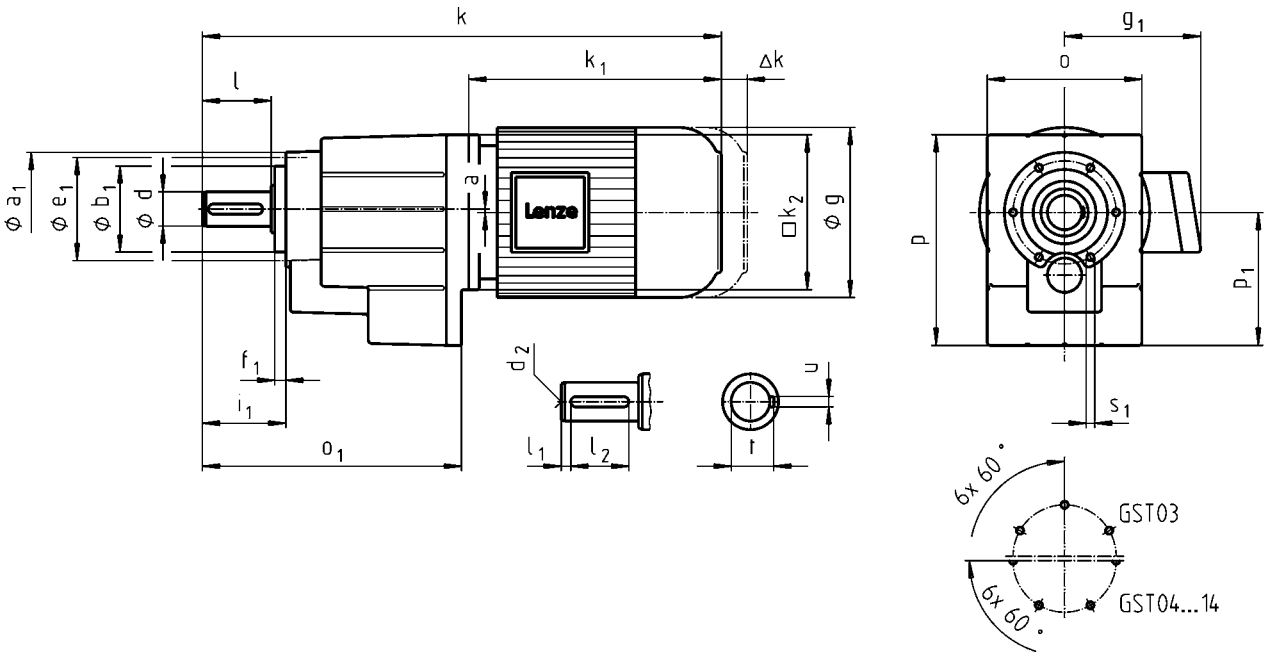

		063C02	063C11	063C12	063C22	063C31	063C32	063C42	071C11	071C13 071C31	071C32	071C33	071C42	080C11	080C13 080C31 080C32 080C33 080C42
g		123							139					156	
g_1	MDEMAXX MDSMAXX	100							109					141	
	MDEMABR MDSMABR	107							118					132	
k_1	MDEMAXX MDSMAXX	156	187		156	187			207					224.5	
k_2		100	120		100	120								145	
Δ k	MDEMABR MDSMABR	71	40		71	40			52					73	
	MDFMAXX		128			128									
	MDFMABR		170			170			165					183	
		k													
GST03		298		329	298		329				349		349		
GST04			371			371			391					413	
GST05								401	421					443	
GST06								427		447				469	
GST07															525

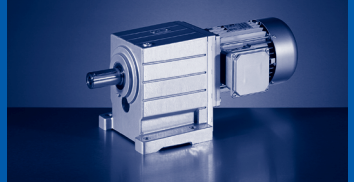

		090C11	090C31	090C32	100C12	100C31	100C32 100C41	112C22 112C31	112C32 112C41	132C21 132C22 132C32	160C22	160C32	180C12 180C32	180C42	225C12 225C22
g		176			194			218		258	310		348		447
g_1	MDEMAXX MDSMAXX	146			157			167		195	210		230		346
	MDEMABR MDSMABR	137			147			158		187	210		230		346
k_1	MDEMAXX MDSMAXX	274		248	309			319	363	403	457.5	501.5	561	618	848
k_2		180						222		265	300				
Δ k	MDEMABR MDSMABR	68			76			90		109.5	105		113		
	MDFMAXX	128			109			102		115	149			155	213
	MDFMABR	181			170			183		201.5	179		215		213
		k													
GST04		473		447											
GST05		503		477	538										
GST06		529		503	564			580	624						
GST07		585		559	620			636	680	728	787	831			
GST09			648	622	683			699	743	791	850	894	954	1011	
GST11					740		740	756	800	848	907	951	1011	1068	1298
GST14								846	890	938	997	1041	1101	1158	1388

	a	o[1)]	p[1)]	p_1
GST03	2	90	100	64
GST04	0	100	129	77
GST05	1	115	156	98
GST06	2	145	194	121
GST07	3	180	245	155
GST09	4	222	304	194
GST11	4	270	378	243
GST14	6	328	470	306

	d	d	d_2	l	l_1	l_2	u	t	i_1	o_1	a_1	b_1	e_1	f_1	s_1
	k6	m6										h7			
GST03	14 20		M5 M6	28 40	4 5	20 28	5 6	16 22.5	39 51	127 139	71	48	61	8	M5x10
GST04	20		M6	40	5	28	6	22.5	51	174	72	48	61	8	M5x10
GST05	25		M10	50	4	40	8	28	62	214	88	58	74	9	M6x12
GST06	30		M10	60	6	45	8	33	74	243	109	70	90	10	M8x14
GST07	40		M16	80	7	63	12	43	97	302	140	100	120	13	M10x18
GST09	50		M16	100	8	80	14	53.5	120	370	174	120	145	15	M12x20
GST11		60	M20	120	8	100	18	64	143	433	215	150	185	18	M16x26
GST14		80	M20	160	15	125	22	85	187	533	265	195	230	22	M20x34

[1)] k_2 !

GST□□-2M VCK

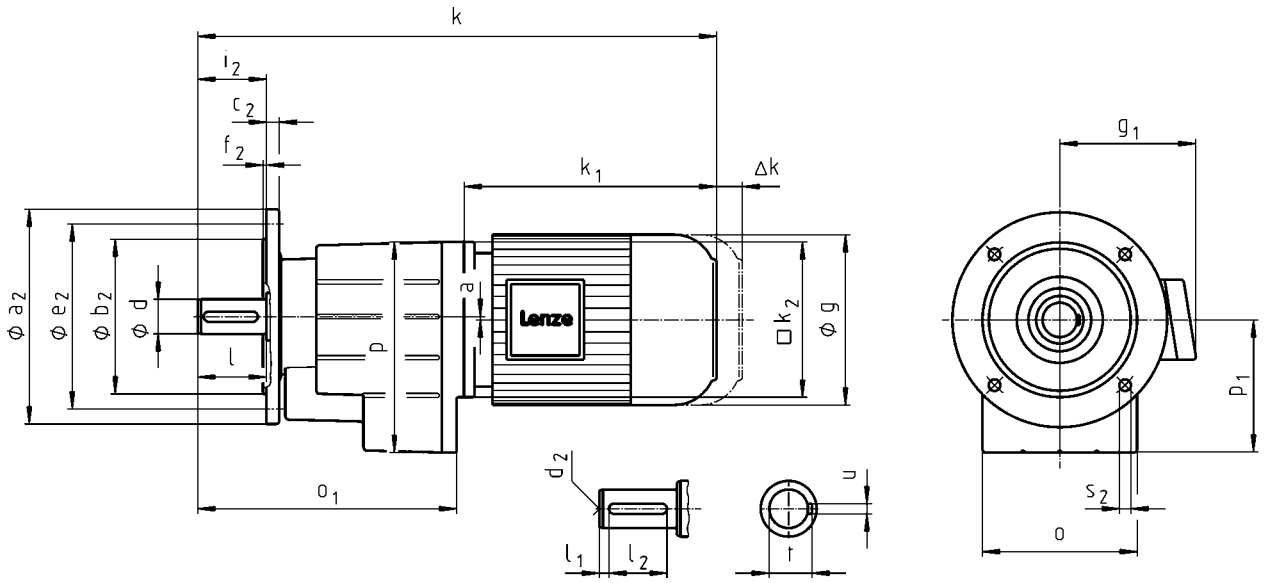

		063C02	063C11	063C12	063C22	063C31	063C32	063C42	071C11	071C13 071C31	071C32	071C33	071C42	080C11	080C13 080C31 080C32 080C33 080C42
g		123							139					156	
g_1	MDEMAXX MDSMAXX	100							109					141	
	MDEMABR MDSMABR	107							118					132	
k_1	MDEMAXX MDSMAXX	156	187		156	187			207					224.5	
k_2		100	120		100	120								145	
Δ k	MDEMABR MDSMABR	71	40		71	40			52					73	
	MDFMAXX	128				128									
	MDFMABR	170				170			165					183	
		k													
GST03		298		329	298		329				349		349		
GST04			371			371			391					413	
GST05								401	421					443	
GST06								427		447				469	
GST07															525

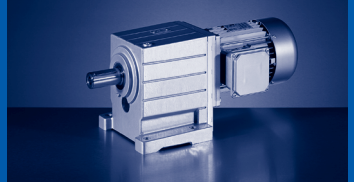

		090C11	090C31	090C32	100C12	100C31	100C32 100C41	112C22 112C31	112C32 112C41	132C21 132C22 132C32	160C22	160C32	180C12 180C32	180C42	225C12 225C22
g		176			194			218		258	310		348		447
g_1	MDEMAXX MDSMAXX	146			157			167		195	210		230		346
	MDEMABR MDSMABR	137			147			158		187	210		230		346
k_1	MDEMAXX MDSMAXX	274		248	309			319	363	403	457.5	501.5	561	618	848
k_2		180						222		265	300				
Δ k	MDEMABR MDSMABR	68			76			90		109.5	105		113		
	MDFMAXX	128			109			102		115	149			155	213
	MDFMABR	181			170			183		201.5	179		215		213
		k													
GST04		473		447											
GST05		503		477	538										
GST06		529		503	564			580	624						
GST07		585		559	620			636	680	728	787	831			
GST09			648	622	683			699	743	791	850	894	954	1011	
GST11					740		740	756	800	848	907	951	1011	1068	1298
GST14								846	890	938	997	1041	1101	1158	1388

	a	o[1)]	p[1)]	p_1
GST03	2	90	100	64
GST04	0	100	129	77
GST05	1	115	156	98
GST06	2	145	194	121
GST07	3	180	245	155
GST09	4	222	304	194
GST11	4	270	378	243
GST14	6	328	470	306

	d	d	d_2	l	l_1	l_2	u	t	i_2	o_1	a_2	b_2	c_2	e_2	f_2	s_2
	k6	m6										j7				
GST03	14 20		M5 M6	28 40	4 5	20 28	5 6	16 22.5	28 40	127 139	120 140 160	80 95 110	10 10 10	100 115 130	3 3 3.5	7 9 9
GST04	20		M6	40	5	28	6	22.5	40	174	120 140 160	80 95 110	10 10 10	100 115 130	3 3 3.5	7 9 9
GST05	25		M10	50	4	40	8	28	50	214	120 140 160 200	80 95 110 130	10 10 10 12	100 115 130 165	3 3 3.5 3.5	7 9 9 11
GST06	30		M10	60	6	45	8	33	60	243	160 200	110 130	12 12	130 165	3.5 3.5	9 11
GST07	40		M16	80	7	63	12	43	80	302	200 250	130 180	14 15	165 215	3.5 4	11 13.5
GST09	50		M16	100	8	80	14	53.5	100	370	250 300	180 230	16 18	215 265	4 4	13.5 13.5
GST11		60	M20	120	8	100	18	64	120	433	300 350	230 250	18 20	265 300	4 5	14 18
GST14		80	M20	160	15	125	22	85	160	533	350 400	250 300	22 24	300 350	5 5	18 18

[1)] k_2 !

GST□□-3M VBR

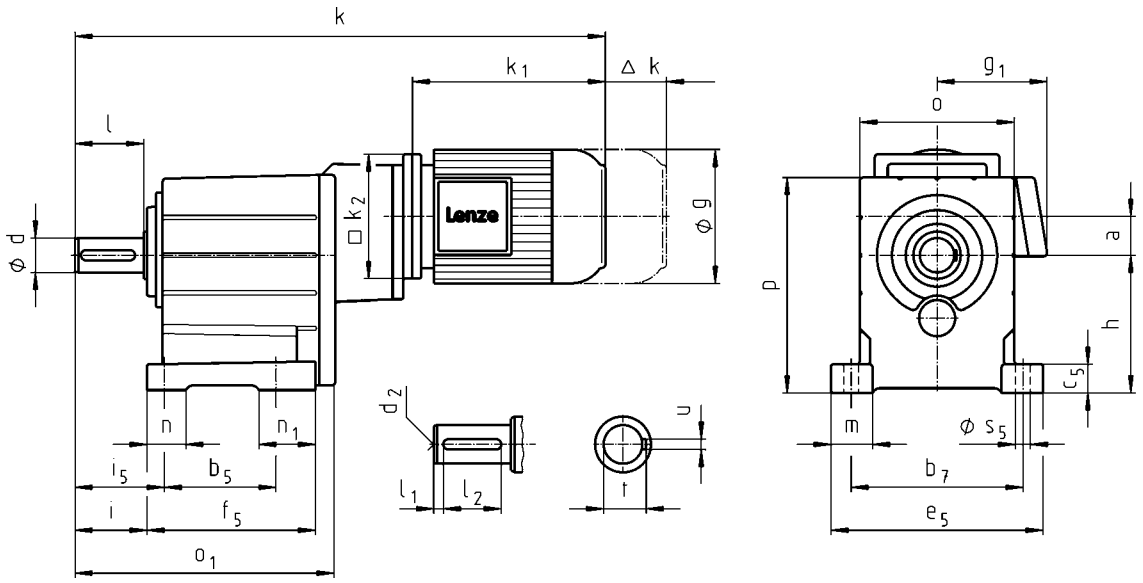

		063C11 063C12 063C31 063C32	063C42	071C11 071C13 071C31 071C32 071C33 071C42	080C11 080C13 080C31	080C32 080C33 080C42	090C11 090C31	090C32
g		123		139	156		176	
g_1	MDEMAXX	100		109	141		146	
	MDEMABR	107		118	132		137	
k_1	MDEMAXX	187		207	224.5		274	248
k_2		120			145		180	
Δ k	MDEMABR	40		52	73		68	
	MDFMAXX	128						
	MDFMABR	170		165	183		181	
		k						
GST05		477		497	520			
GST06		520		540	563		622	596
GST07			587	607	630		689	663
GST09			668	688	711		770	744
GST11					787		846	820
GST14							970	944

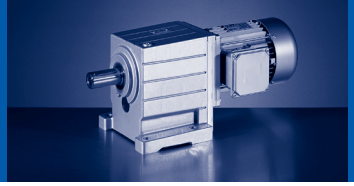

		100C12 100C31 100C32 100C41	112C22 112C31	112C32 112C41	132C21 132C22 132C32	160C22	160C32	180C12 180C32
g		194	218		258	310		348
g_1	MDEMAXX	157	167		195	210		230
	MDEMABR	147	158		187	210		230
k_1	MDEMAXX	309	319	363	403	457.5	501.5	561
k_2		180	222		265	300		
Δ k	MDEMABR	76	90		109.5	105		113
	MDFMAXX	109	102		115	149		
	MDFMABR	170	183		201.5	179		215
		k						
GST07		724						
GST09		805	821	865				
GST11		881	897	941	989			
GST14		1005	1021	1065	1113	1173	1217	1276

	a	h	o[1]	p[1]
GST05	35	100	115	158.5
GST06	34	125	145	198
GST07	42	160	180	251
GST09	52	200	222	311
GST11	66	250	270	385
GST14	83	315	328	479

	d	d	d_2	l	l_1	l_2	u	t	i	i_5	o_1	b_5	b_7	c_5	e_5	f_5	m	n	n_1	s_5
	k6	m6																		
GST05	25		M10	50	4	40	8	28	53	66	208	90	125	23	155	139	32.5	26	49	11
GST06	30		M10	60	6	45	8	33	64	79	240	106	160	28	196	157	38	35	52	13.5
GST07	40		M16	80	7	63	12	43	84	104	302	130	200	34	247	196	48.5	45	66	18
GST09	50		M16	100	8	80	14	53.5	105	127.5	370	165	245	44	298	239	54	48	74	18
GST11		60	M20	120	8	100	18	64	125	155	433	200	300	54	368	280	69	65	80	22
GST14		80	M20	160	15	125	22	85	165	200	533	250	380	65	460	340	85	85	91	26

[1] k_2 !

GST□□-3M VCR

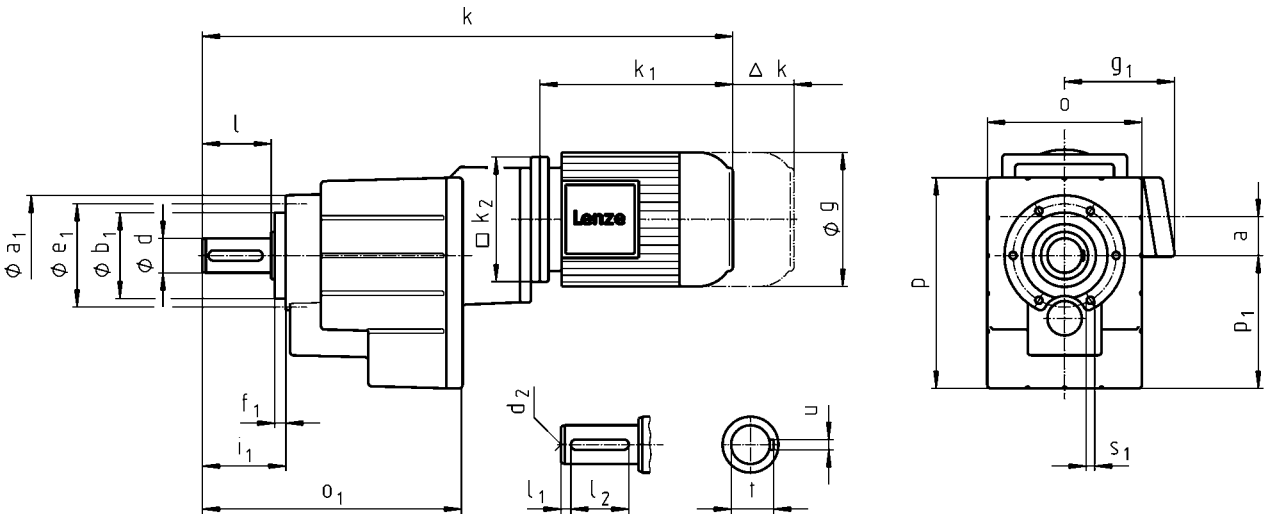

		063C11 063C12 063C31 063C32	063C42	071C11 071C13 071C31 071C32 071C33 071C42	080C11 080C13 080C31	080C32 080C33 080C42	090C11 090C31	090C32
g		123		139	156		176	
g_1	MDEMAXX	100		109	141		146	
	MDEMABR	107		118	132		137	
k_1	MDEMAXX	187		207	224.5		274	248
k_2		120			145		180	
Δ k	MDEMABR	40		52	73		68	
	MDFMAXX	128						
	MDFMABR	170		165	183		181	
		k						
GST05		477		497	520			
GST06		520		540	563		622	596
GST07			587	607	630		689	663
GST09			668	688	711		770	744
GST11					787		846	820
GST14							970	944

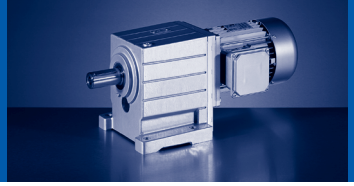

		100C12 100C31 100C32 100C41	112C22 112C31	112C32 112C41	132C21 132C22 132C32	160C22	160C32	180C12 180C32
g		194	218		258	310		348
g_1	MDEMAXX	157	167		195	210		230
	MDEMABR	147	158		187	210		230
k_1	MDEMAXX	309	319	363	403	457.5	501.5	561
k_2		180	222		265	300		
Δ k	MDEMABR	76	90		109.5	105		113
	MDFMAXX	109	102		115	149		
	MDFMABR	170	183		201.5	179		215
		k						
GST07		724						
GST09		805	821	865				
GST11		881	897	941	989			
GST14		1005	1021	1065	1113	1173	1217	1276

	a	o[1)]	p[1)]	p_1
GST05	35	115	156	98
GST06	34	145	194	121
GST07	42	180	245	155
GST09	52	222	304	194
GST11	66	270	378	243
GST14	83	328	470	306

	d	d	d_2	l	l_1	l_2	u	t	i_1	o_1	a_1	b_1	e_1	f_1	s_1
	k6	m6										h7			
GST05	25		M10	50	4	40	8	28	62	208	88	58	74	9	M6x12
GST06	30		M10	60	6	45	8	33	74	240	109	70	90	10	M8x14
GST07	40		M16	80	7	63	12	43	97	302	140	100	120	13	M10x18
GST09	50		M16	100	8	80	14	53.5	120	370	174	120	145	15	M12x20
GST11		60	M20	120	8	100	18	64	143	433	215	150	185	18	M16x26
GST14		80	M20	160	15	125	22	85	187	533	265	195	230	22	M20x34

[1)] k_2 !

GST□□-3M VCK

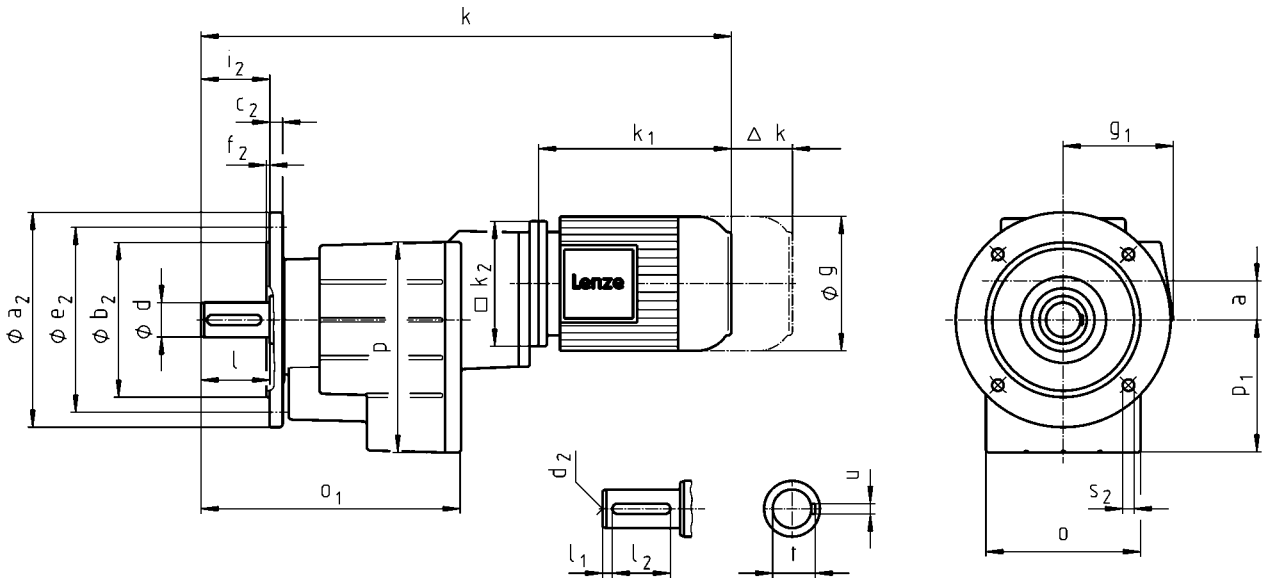

		063C11 063C12 063C31 063C32	063C42	071C11 071C13 071C31 071C32 071C33 071C42	080C11 080C13 080C31	080C32 080C33 080C42	090C11 090C31	090C32
g		123		139	156		176	
g_1	MDEMAXX	100		109	141		146	
	MDEMABR	107		118	132		137	
k_1	MDEMAXX	187		207	224.5		274	248
k_2		120			145		180	
Δ k	MDEMABR	40		52	73		68	
	MDFMAXX	128						
	MDFMABR	170		165	183		181	
		k						
GST05		477		497	520			
GST06		520		540	563		622	596
GST07			587	607	630		689	663
GST09			668	688	711		770	744
GST11					787		846	820
GST14							970	944

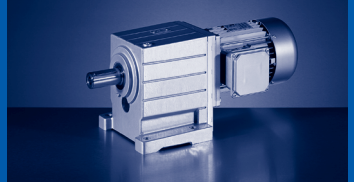

		100C12 100C31 100C32 100C41	112C22 112C31	112C32 112C41	132C21 132C22 132C32	160C22	160C32	180C12 180C32
g		194	218		258	310		348
g_1	MDEMAXX	157	167		195	210		230
	MDEMABR	147	158		187	210		230
k_1	MDEMAXX	309	319	363	403	457.5	501.5	561
k_2		180	222		265	300		
Δ k	MDEMABR	76	90		109.5	105		113
	MDFMAXX	109	102		115	149		
	MDFMABR	170	183		201.5	179		215
		k						
GST07		724						
GST09		805	821	865				
GST11		881	897	941	989			
GST14		1005	1021	1065	1113	1173	1217	1276

	a	o[1)]	p[1)]	p_1
GST05	35	115	156	98
GST06	34	145	194	121
GST07	42	180	245	155
GST09	52	222	304	194
GST11	66	270	378	243
GST14	83	328	470	306

	d	d	d_2	l	l_1	l_2	u	t	i_2	o_1	a_2	b_2	c_2	e_2	f_2	s_2
	k6	m6										j7				
GST05	25		M10	50	4	40	8	28	50	208	120 140 160 200	80 95 110 130	10 10 10 12	100 115 130 165	3 3 3.5 3.5	7 9 9 11
GST06	30		M10	60	6	45	8	33	60	240	160 200	110 130	12 12	130 165	3.5 3.5	9 11
GST07	40		M16	80	7	63	12	43	80	302	200 250	130 180	14 15	165 215	3.5 4	11 13.5
GST09	50		M16	100	8	80	14	53.5	100	370	250 300	180 230	16 18	215 265	4 4	13.5 13.5
GST11		60	M20	120	8	100	18	64	120	433	300 350	230 250	18 20	265 300	4 5	14 18
GST14		80	M20	160	15	125	22	85	160	533	350 400	250 300	22 24	300 350	5 5	18 18

[1)] k_2 !

GST□□-1M VBR

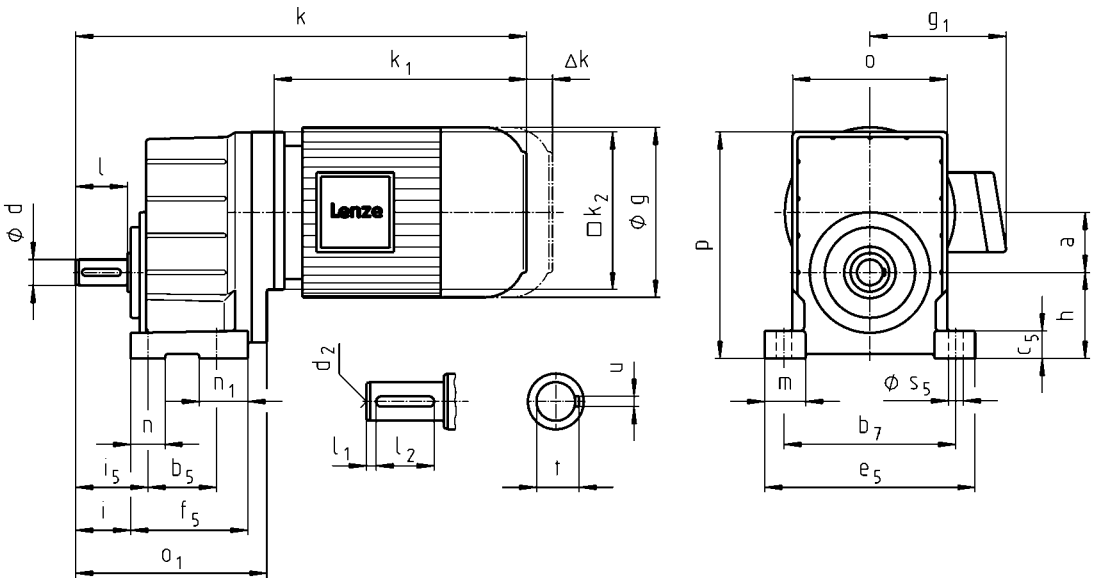

		080C32	090C12 090C32	100C12	100C32	112C22
g		156	176	194		218
g_1	MHEMAXX	141	146	157		167
	MHEMABR	132	137	147		158
k_1	MHEMAXX	224.5	274	309	324	363
k_2		145	180			222
Δ k	MHEMABR	73	68	76		90
	MHFMAXX	128		109		102
	MHFMABR	183	181	170		183
		k				
GST04		373	433			
GST05		394	454	489	504	
GST06		417	477	512	527	572
GST07		446	506	541	556	601
GST09			549	584	599	644

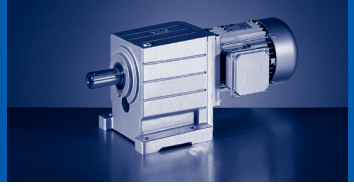

		132C12 132C22	160C22	160C32	180C12 180C32	180C42
g		258	310		348	
g_1	MHEMAXX	195	210		230	
	MHEMABR	187	210		230	
k_1	MHEMAXX	403	457.5	501.5	561	618
k_2		265	300			
Δ k	MHEMABR	109.5	105		113	
	MHFMAXX	115	149			155
	MHFMABR	201.5	179		215	
		k				
GST07		649	708			
GST09		692	751	795	855	912

	a	h[1]	o[1]	p[1]
GST04	36	50	100	138
GST05	45	63	115	168
GST06	56	80	145	211
GST07	70	100	180	264
GST09	89	125	222	329

	d	d_2	l	l_1	l_2	u	t	i	i_5	o_1	b_5	b_7	c_5	e_5	f_5	m	n	n_1	s_5
	k6																		
GST04	16	M5	32	6	20	5	18	35	45	134	55	105	17	128	80	24	20	25	9
GST05	20	M6	40	6	28	6	22.5	43	56	165	70	125	22	154	99	32	26	29	11
GST06	25	M10	50	4	40	8	28	53	68	191	72	160	27	194	115	37	30	43	13.5
GST07	30	M10	60	7.5	45	8	33	64	84	223	80	200	35	245	137	48	40	57	18
GST09	40	M16	80	8.5	63	12	43	84	107	271	105	245	43	296	161	51	45	56	18

[1] k_2 !

GST□□-1M VCR

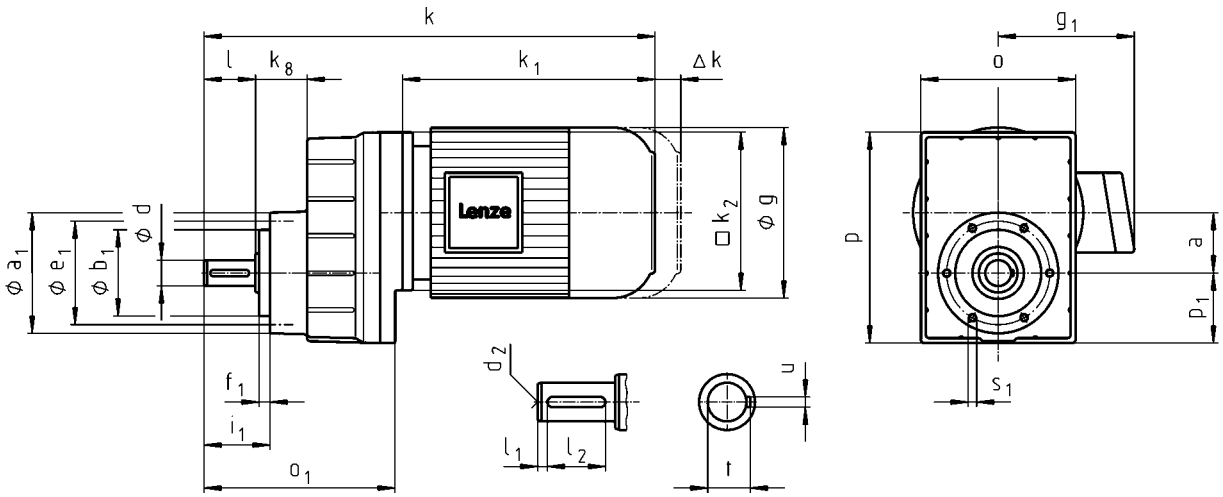

		080C32	090C12 090C32	100C12	100C32	112C22
g		156	176	194		218
g_1	MHEMAXX	141	146	157		167
	MHEMABR	132	137	147		158
k_1	MHEMAXX	224.5	274	309	324	363
k_2		145	180			222
Δ k	MHEMABR	73	68	76		90
	MHFMAXX	128		109		102
	MHFMABR	183	181	170		183
		k				
GST04		373	433			
GST05		394	454	489	504	
GST06		417	477	512	527	572
GST07		446	506	541	556	601
GST09			549	584	599	644

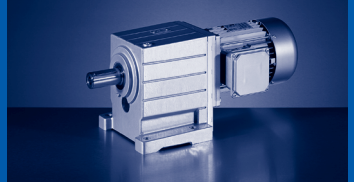

		132C12 132C22	160C22	160C32	180C12 180C32	180C42
g		258	310		348	
g_1	MHEMAXX	195	210		230	
	MHEMABR	187	210		230	
k_1	MHEMAXX	403	457.5	501.5	561	618
k_2		265	300			
Δ k	MHEMABR	109.5	105		113	
	MHFMAXX	115	149			155
	MHFMABR	201.5	179		215	
		k				
GST07		649	708			
GST09		692	751	795	855	912

	a	k_8	o[1)]	p[1)]	p_1
GST04	36	35	100	129	41
GST05	45	43	115	156	51
GST06	56	48	145	194	63
GST07	70	60	180	245	82
GST09	89	74	222	304	101

	d	d_2	l	l_1	l_2	u	t	i_1	o_1	a_1	b_1	e_1	f_1	s_1
	k6										h7			
GST04	16	M5	32	6	20	5	18	43	134	72	48	61	8	M5x10
GST05	20	M6	40	6	28	6	22.5	52	165	88	58	74	9	M6x10
GST06	25	M10	50	4	40	8	28	64	191	109	70	90	11	M8x14
GST07	30	M10	60	7.5	45	8	33	77	223	140	100	120	13	M10x18
GST09	40	M16	80	8.5	63	12	43	100	271	174	120	145	15	M12x20

[1)] k_2 !

GST□□-1M VCK

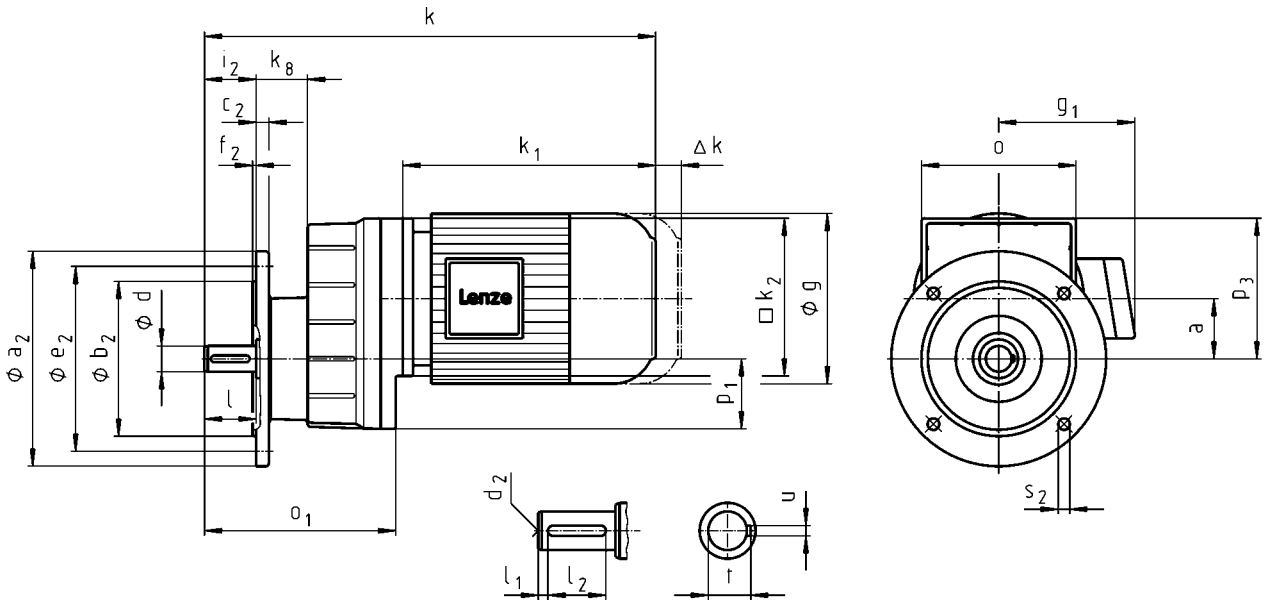

		080C32	090C12 090C32	100C12	100C32	112C22
g		156	176	194		218
g_1	MHEMAXX	141	146	157		167
	MHEMABR	132	137	147		158
k_1	MHEMAXX	224.5	274	309	324	363
k_2		145		180		222
Δ k	MHEMABR	73	68	76		90
	MHFMAXX	128		109		102
	MHFMABR	183	181	170		183
		k				
GST04		373	433			
GST05		394	454	489	504	
GST06		417	477	512	527	572
GST07		446	506	541	556	601
GST09			549	584	599	644

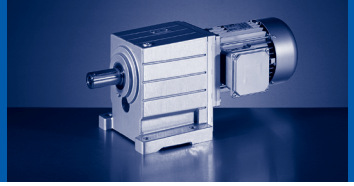

		132C12 132C22	160C22	160C32	180C12 180C32	180C42
g		258	310		348	
g_1	MHEMAXX	195	210		230	
	MHEMABR	187	210		230	
k_1	MHEMAXX	403	457.5	501.5	561	618
k_2		265	300			
Δ k	MHEMABR	109.5	105		113	
	MHFMAXX	115	149			155
	MHFMABR	201.5	179		215	
		k				
GST07		649	708			
GST09		692	751	795	855	912

	a	k_8	o[1)]	p_1	p_3[1)]
GST04	36	35	100	41	88
GST05	45	43	115	51	105
GST06	56	48	145	63	131
GST07	70	60	180	82	164
GST09	89	74	222	101	204

	d	d_2	l	l_1	l_2	u	t	i_2	o_1	a_2	b_2	c_2	e_2	f_2	s_2
	k6										j7				
GST04	16	M5	32	6	20	5	18	32	134	120 140 160	80 95 110	10 10 10	100 115 130	3 3 3.5	7 9 9
GST05	20	M6	40	6	28	6	22.5	40	165	120 140 160 200	80 95 110 130	10 10 10 12	100 115 130 165	3 3 3.5 3.5	7 9 9 11
GST06	25	M10	50	4	40	8	28	50	191	160 200	110 130	12 12	130 165	3.5 3.5	9 11
GST07	30	M10	60	7.5	45	8	33	60	223	200 250	130 180	14 15	165 215	3.5 4	11 13.5
GST09	40	M16	80	8.5	63	12	43	80	271	250 300	180 230	16 18	215 265	4 4	13.5 13.5

[1)] k_2 !

GST□□-2M VBR

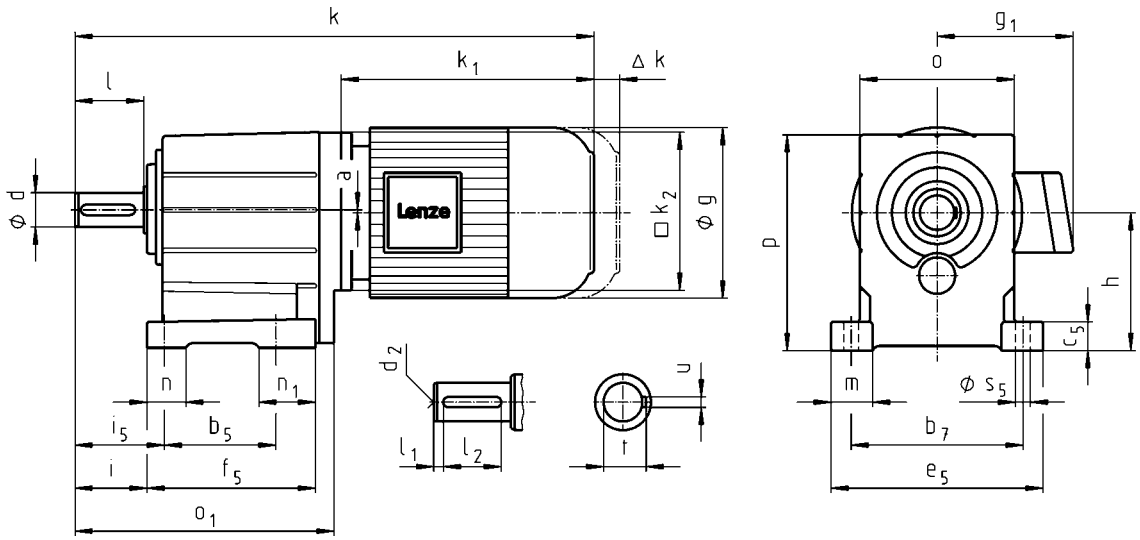

		080C32	090C12 090C32	100C12	100C32	112C22
g		156	176	194		218
g_1	MHEMAXX	141	146	157		167
	MHEMABR	132	137	147		158
k_1	MHEMAXX	224.5	274	309	324	363
k_2		145	180			222
Δ k	MHEMABR	73	68	76		90
	MHFMAXX	128		109		102
	MHFMABR	183	181	170		183
		k				
GST04		413	473			
GST05		443	503	538	553	
GST06		469	529	564	579	624
GST07		525	585	620	635	680
GST09			648	683	698	743
GST11				740	755	800
GST14						890

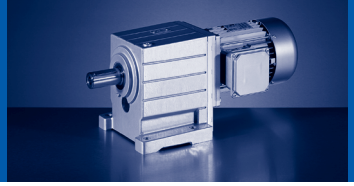

		132C12 132C22	160C22	160C32	180C12 180C32	180C42	225C12 225C22
g		258	310		348		447
g_1	MHEMAXX	195	210		230		346
	MHEMABR	187	210		230		346
k_1	MHEMAXX	403	457.5	501.5	561	618	848
k_2		265	300				
Δ k	MHEMABR	109.5	105		113		
	MHFMAXX	115	149			155	213
	MHFMABR	201.5	179		215		213
		k					
GST06		672					
GST07		728	787	831			
GST09		791	850	894	954	1011	
GST11		848	907	951	1011	1068	1298
GST14		938	997	1041	1101	1158	1388

	a	h[1)]	o[1)]	p[1)]
GST04	0	80	100	132
GST05	1	100	115	158.5
GST06	2	125	145	198
GST07	3	160	180	251
GST09	4	200	222	311
GST11	4	250	270	385
GST14	6	315	328	479

	d	d	d_2	l	l_1	l_2	u	t	i	i_5	o_1	b_5	b_7	c_5	e_5	f_5	m	n	n_1	s_5
	k6	m6																		
GST04	20		M6	40	5	28	6	22.5	43	53	174	76	105	18	129	112	24.5	20	36	9
GST05	25		M10	50	4	40	8	28	53	66	214	90	125	23	155	139	32.5	26	49	11
GST06	30		M10	60	6	45	8	33	64	79	243	106	160	28	196	157	38	35	52	13.5
GST07	40		M16	80	7	63	12	43	84	104	302	130	200	34	247	196	48.5	45	66	18
GST09	50		M16	100	8	80	14	53.5	105	127.5	370	165	245	44	298	239	54	48	74	18
GST11		60	M20	120	8	100	18	64	125	155	433	200	300	54	368	280	69	65	80	22
GST14		80	M20	160	15	125	22	85	165	200	533	250	380	65	460	340	85	85	91	26

[1)] k_2 !

GST□□-2M VCR

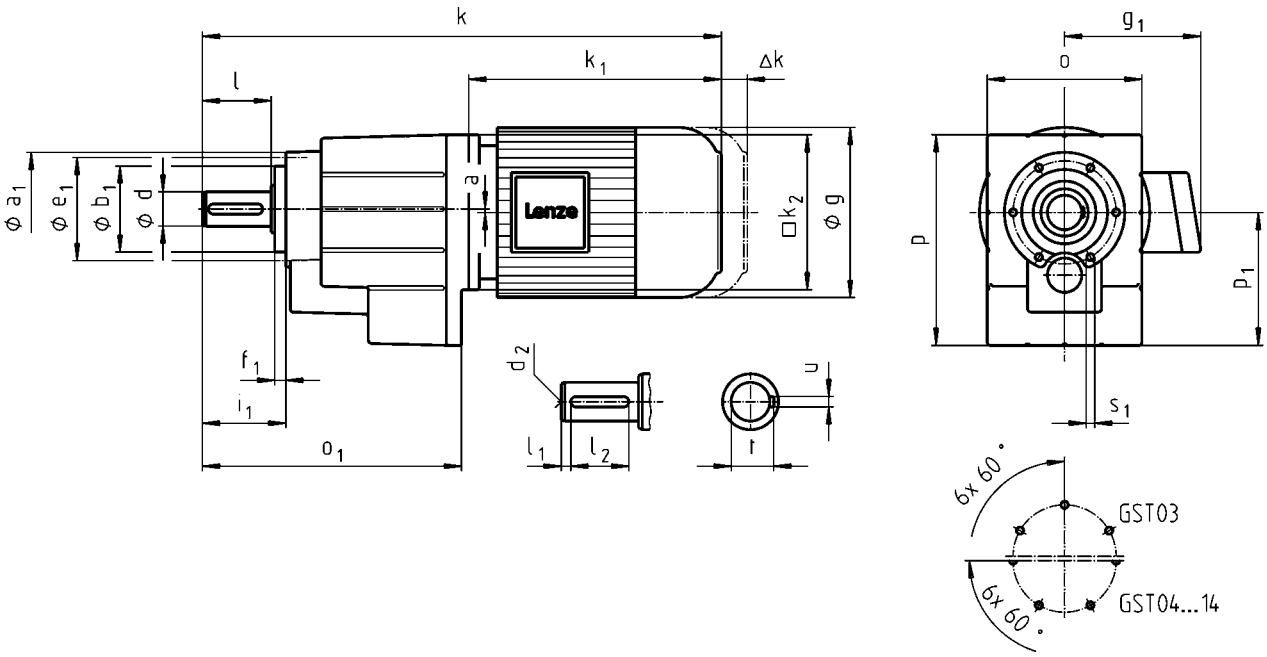

		080C32	090C12 090C32	100C12	100C32	112C22
g		156	176	194		218
g_1	MHEMAXX	141	146	157		167
	MHEMABR	132	137	147		158
k_1	MHEMAXX	224.5	274	309	324	363
k_2		145	180			222
Δ k	MHEMABR	73	68	76		90
	MHFMAXX	128		109		102
	MHFMABR	183	181	170		183
		k				
GST04		413	473			
GST05		443	503	538	553	
GST06		469	529	564	579	624
GST07		525	585	620	635	680
GST09			648	683	698	743
GST11				740	755	800
GST14						890

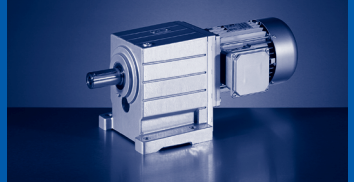

		132C12 132C22	160C22	160C32	180C12 180C32	180C42	225C12 225C22
g		258	310		348		447
g_1	MHEMAXX	195	210		230		346
	MHEMABR	187	210		230		346
k_1	MHEMAXX	403	457.5	501.5	561	618	848
k_2		265	300				
Δ k	MHEMABR	109.5	105		113		
	MHFMAXX	115	149			155	213
	MHFMABR	201.5	179		215		213
		k					
GST06		672					
GST07		728	787	831			
GST09		791	850	894	954	1011	
GST11		848	907	951	1011	1068	1298
GST14		938	997	1041	1101	1158	1388

	a	o[1)]	p[1)]	p_1
GST04	0	100	129	77
GST05	1	115	156	98
GST06	2	145	194	121
GST07	3	180	245	155
GST09	4	222	304	194
GST11	4	270	378	243
GST14	6	328	470	306

	d	d	d_2	l	l_1	l_2	u	t	i_1	o_1	a_1	b_1	e_1	f_1	s_1
	k6	m6										h7			
GST04	20		M6	40	5	28	6	22.5	51	174	72	48	61	8	M5x10
GST05	25		M10	50	4	40	8	28	62	214	88	58	74	9	M6x12
GST06	30		M10	60	6	45	8	33	74	243	109	70	90	10	M8x14
GST07	40		M16	80	7	63	12	43	97	302	140	100	120	13	M10x18
GST09	50		M16	100	8	80	14	53.5	120	370	174	120	145	15	M12x20
GST11		60	M20	120	8	100	18	64	143	433	215	150	185	18	M16x26
GST14		80	M20	160	15	125	22	85	187	533	265	195	230	22	M20x34

[1)] k_2 !

GST□□-2M VCK

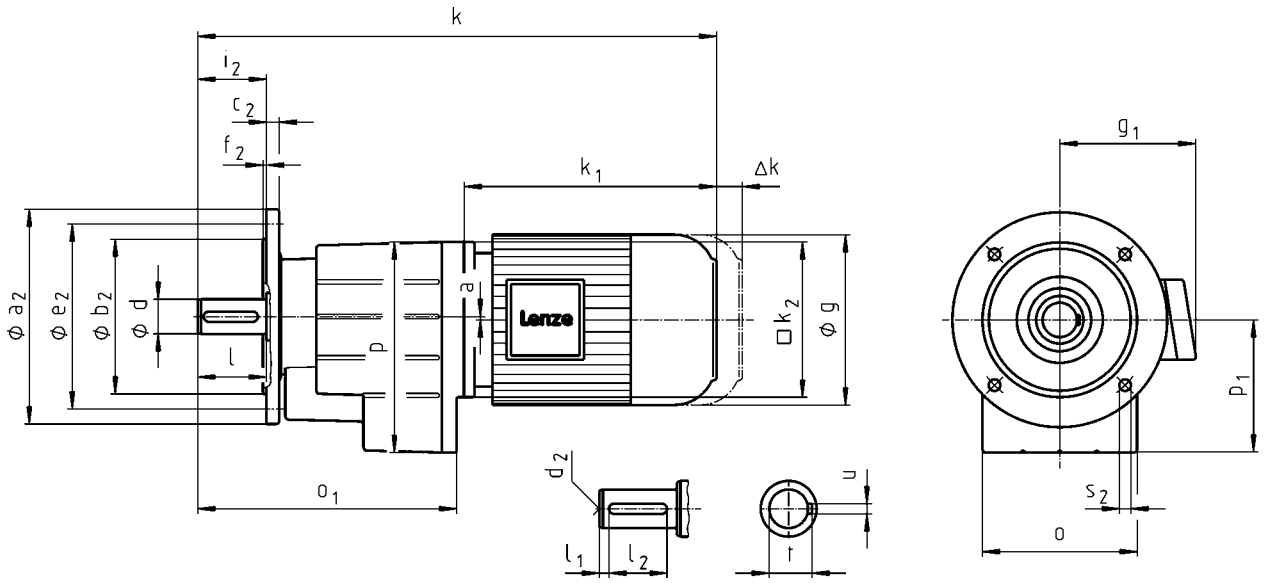

		080C32	090C12 090C32	100C12	100C32	112C22
g		156	176	194		218
g_1	MHEMAXX	141	146	157		167
	MHEMABR	132	137	147		158
k_1	MHEMAXX	224.5	274	309	324	363
k_2		145	180			222
Δ k	MHEMABR	73	68	76		90
	MHFMAXX	128		109		102
	MHFMABR	183	181	170		183
		k				
GST04		413	473			
GST05		443	503	538	553	
GST06		469	529	564	579	624
GST07		525	585	620	635	680
GST09			648	683	698	743
GST11				740	755	800
GST14						890

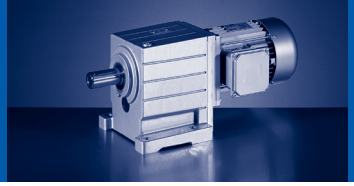

		132C12 132C22	160C22	160C32	180C12 180C32	180C42	225C12 225C22
g		258	310		348		447
g_1	MHEMAXX	195	210		230		346
	MHEMABR	187	210		230		346
k_1	MHEMAXX	403	457.5	501.5	561	618	848
k_2		265	300				
Δ k	MHEMABR	109.5	105		113		
	MHFMAXX	115	149			155	213
	MHFMABR	201.5	179		215		213
		k					
GST06		672					
GST07		728	787	831			
GST09		791	850	894	954	1011	
GST11		848	907	951	1011	1068	1298
GST14		938	997	1041	1101	1158	1388

	a	o[1)]	p[1)]	p_1
GST04	0	100	129	77
GST05	1	115	156	98
GST06	2	145	194	121
GST07	3	180	245	155
GST09	4	222	304	194
GST11	4	270	378	243
GST14	6	328	470	306

	d	d	d_2	l	l_1	l_2	u	t	i_2	o_1	a_2	b_2	c_2	e_2	f_2	s_2
	k6	m6										j7				
GST04	20		M6	40	5	28	6	22.5	40	174	120 140 160	80 95 110	10 10 10	100 115 130	3 3 3.5	7 9 9
GST05	25		M10	50	4	40	8	28	50	214	120 140 160 200	80 95 110 130	10 10 10 12	100 115 130 165	3 3 3.5 3.5	7 9 9 11
GST06	30		M10	60	6	45	8	33	60	243	160 200	110 130	12 12	130 165	3.5 3.5	9 11
GST07	40		M16	80	7	63	12	43	80	302	200 250	130 180	14 15	165 215	3.5 4	11 13.5
GST09	50		M16	100	8	80	14	53.5	100	370	250 300	180 230	16 18	215 265	4 4	13.5 13.5
GST11		60	M20	120	8	100	18	64	120	433	300 350	230 250	18 20	265 300	4 5	14 18
GST14		80	M20	160	15	125	22	85	160	533	350 400	250 300	22 24	300 350	5 5	18 18

[1)] k_2 !

GST□□-3M VBR

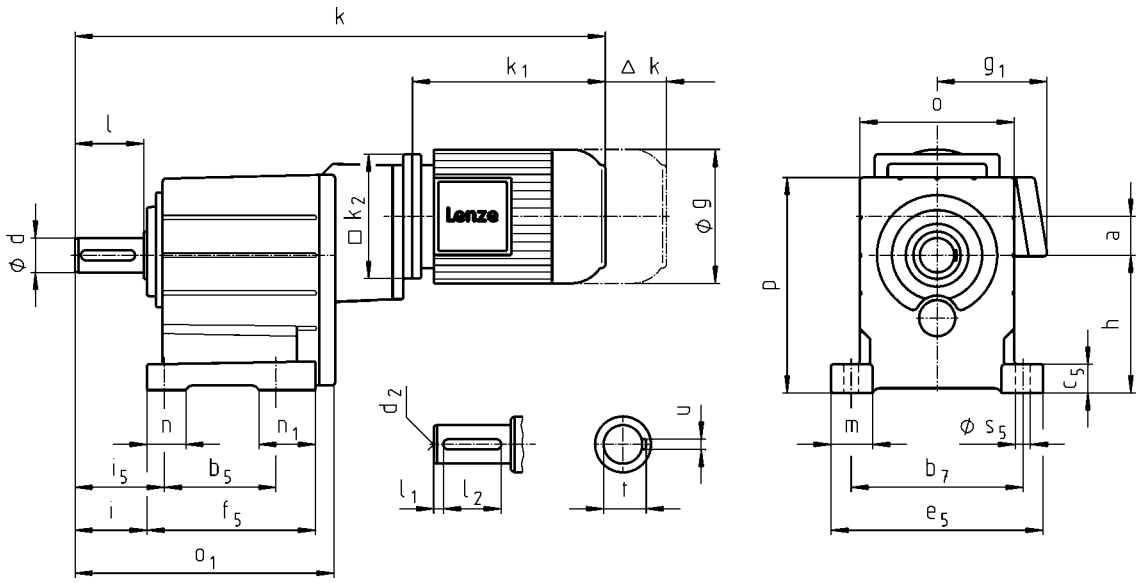

		080C32	090C12 090C32	100C12	100C32
g		156	176	194	
g_1	MHEMAXX	141	146	157	
	MHEMABR	132	137	147	
k_1	MHEMAXX	224.5	274	309	324
k_2		145	180		
Δ k	MHEMABR	73	68	76	
	MHFMAXX	128		109	
	MHFMABR	183	181	170	
		k			
	GST06	563	622		
	GST07	630	689	724	739
	GST09	711	770	805	820
	GST11	787	846	881	896
	GST14		970	1005	1020

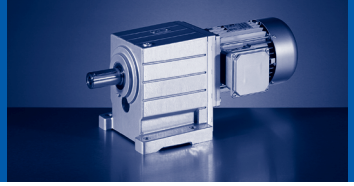

		112C22	132C12 132C22	160C22	160C32	180C12 180C32
g		218	258	310		348
g_1	MHEMAXX	167	195	210		230
	MHEMABR	158	187	210		230
k_1	MHEMAXX	363	403	457.5	501.5	561
k_2		222	265	300		
Δ k	MHEMABR	90	109.5	105		113
	MHFMAXX	102	115	149		
	MHFMABR	183	201.5	179		215
		k				
GST09		865				
GST11		941	989			
GST14		1065	1113	1173	1217	1276

	a	h	o[1]	p[1]
GST06	34	125	145	198
GST07	42	160	180	251
GST09	52	200	222	311
GST11	66	250	270	385
GST14	83	315	328	479

	d	d	d_2	l	l_1	l_2	u	t	i	i_5	o_1	b_5	b_7	c_5	e_5	f_5	m	n	n_1	s_5
	k6	m6																		
GST06	30		M10	60	6	45	8	33	64	79	240	106	160	28	196	157	38	35	52	13.5
GST07	40		M16	80	7	63	12	43	84	104	302	130	200	34	247	196	48.5	45	66	18
GST09	50		M16	100	8	80	14	53.5	105	127.5	370	165	245	44	298	239	54	48	74	18
GST11		60	M20	120	8	100	18	64	125	155	433	200	300	54	368	280	69	65	80	22
GST14		80	M20	160	15	125	22	85	165	200	533	250	380	65	460	340	85	85	91	26

[1] k_2 !

GST□□-3M VCR

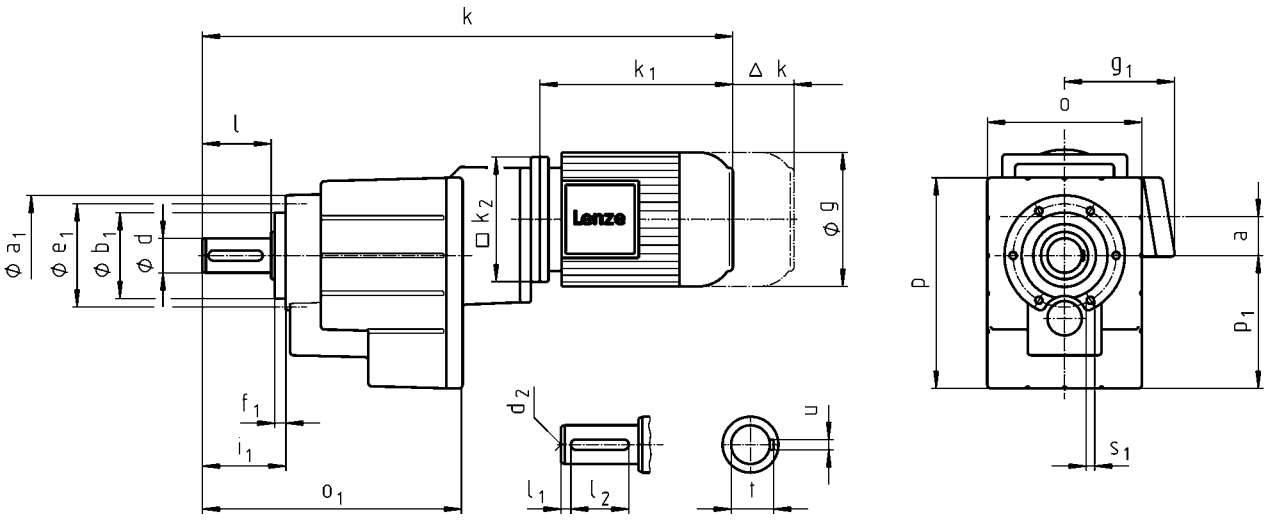

		080C32	090C12 090C32	100C12	100C32
g		156	176	194	
g_1	MHEMAXX	141	146	157	
	MHEMABR	132	137	147	
k_1	MHEMAXX	224.5	274	309	324
k_2		145	180		
Δ k	MHEMABR	73	68	76	
	MHFMAXX	128		109	
	MHFMABR	183	181	170	
		k			
GST06		563	622		
GST07		630	689	724	739
GST09		711	770	805	820
GST11		787	846	881	896
GST14			970	1005	1020

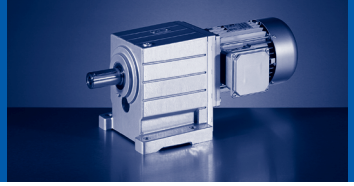

		112C22	132C12 132C22	160C22	160C32	180C12 180C32
g		218	258	310		348
g_1	MHEMAXX	167	195	210		230
	MHEMABR	158	187	210		230
k_1	MHEMAXX	363	403	457.5	501.5	561
k_2		222	265	300		
Δ k	MHEMABR	90	109.5	105		113
	MHFMAXX	102	115	149		
	MHFMABR	183	201.5	179		215
		k				
GST09		865				
GST11		941	989			
GST14		1065	1113	1173	1217	1276

	a	o[1]	p[1]	p_1
GST06	34	145	194	121
GST07	42	180	245	155
GST09	52	222	304	194
GST11	66	270	378	243
GST14	83	328	470	306

	d	d	d_2	l	l_1	l_2	u	t	i_1	o_1	a_1	b_1	e_1	f_1	s_1
	k6	m6										h7			
GST06	30		M10	60	6	45	8	33	74	240	109	70	90	10	M8x14
GST07	40		M16	80	7	63	12	43	97	302	140	100	120	13	M10x18
GST09	50		M16	100	8	80	14	53.5	120	370	174	120	145	15	M12x20
GST11		60	M20	120	8	100	18	64	143	433	215	150	185	18	M16x26
GST14		80	M20	160	15	125	22	85	187	533	265	195	230	22	M20x34

[1] k_2 !

GST□□-3M VCK

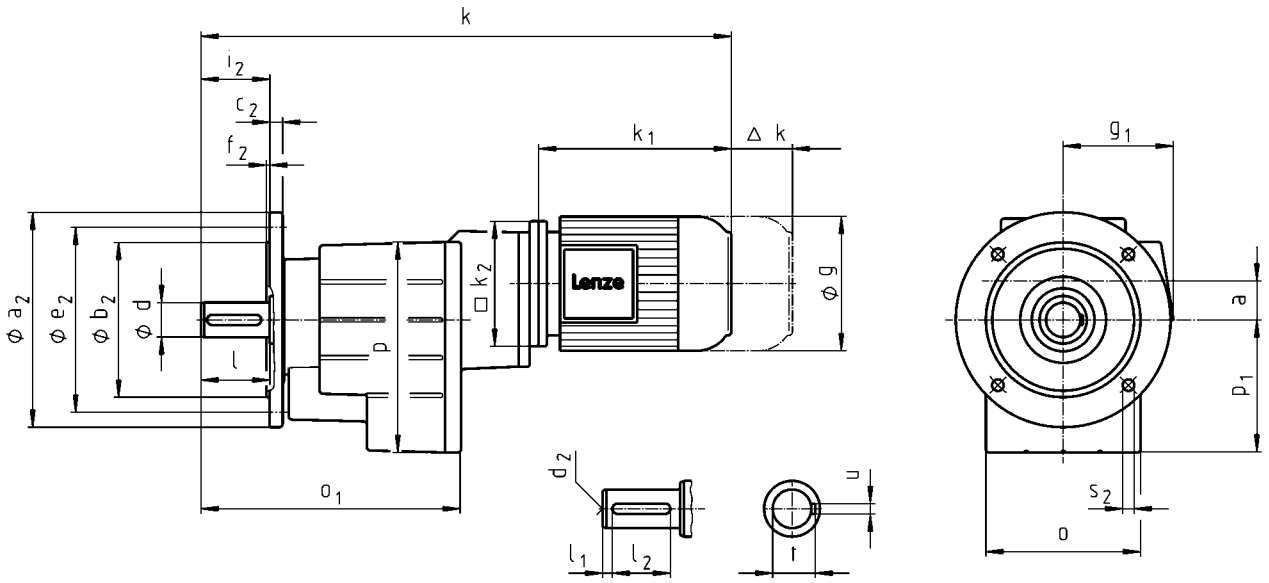

		080C32	090C12 090C32	100C12	100C32
g		156	176	194	
g_1	MHEMAXX	141	146	157	
	MHEMABR	132	137	147	
k_1	MHEMAXX	224.5	274	309	324
k_2		145	180		
Δ k	MHEMABR	73	68	76	
	MHFMAXX	128		109	
	MHFMABR	183	181	170	
		k			
	GST06	563	622		
	GST07	630	689	724	739
	GST09	711	770	805	820
	GST11	787	846	881	896
	GST14		970	1005	1020

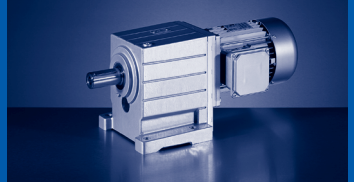

		112C22	132C12 132C22	160C22	160C32	180C12 180C32
g		218	258	310		348
g_1	MHEMAXX	167	195	210		230
	MHEMABR	158	187	210		230
k_1	MHEMAXX	363	403	457.5	501.5	561
k_2		222	265	300		
Δ k	MHEMABR	90	109.5	105		113
	MHFMAXX	102	115	149		
	MHFMABR	183	201.5	179		215
		k				
GST09		865				
GST11		941	989			
GST14		1065	1113	1173	1217	1276

	a	o[1]	p[1]	p_1
GST06	34	145	194	121
GST07	42	180	245	155
GST09	52	222	304	194
GST11	66	270	378	243
GST14	83	328	470	306

	d	d	d_2	l	l_1	l_2	u	t	i_2	o_1	a_2	b_2	c_2	e_2	f_2	s_2
	k6	m6										j7				
GST06	30		M10	60	6	45	8	33	60	240	160 200	110 130	12 12	130 165	3.5 3.5	9 11
GST07	40		M16	80	7	63	12	43	80	302	200 250	130 180	14 15	165 215	3.5 4	11 13.5
GST09	50		M16	100	8	80	14	53.5	100	370	250 300	180 230	16 18	215 265	4 4	13.5 13.5
GST11		60	M20	120	8	100	18	64	120	433	300 350	230 250	18 20	265 300	4 5	14 18
GST14		80	M20	160	15	125	22	85	160	533	350 400	250 300	22 24	300 350	5 5	18 18

[1] k_2 !

GST□□-2/3M VAR

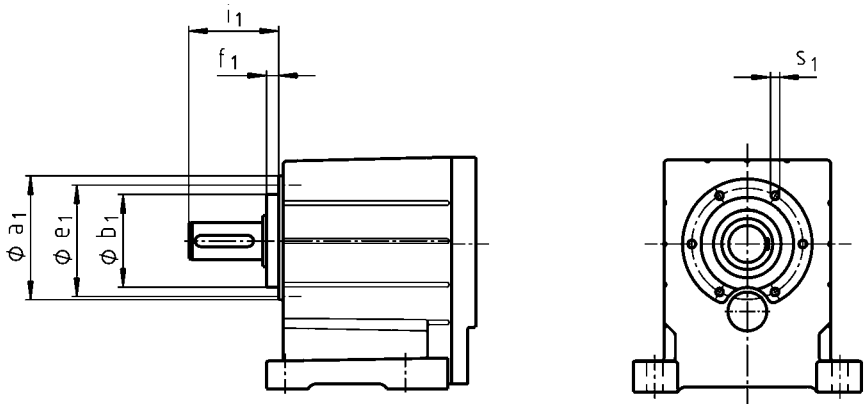

	a_1	b_1	e_1	f_1	i_1	s_1
		h7				
GST04	72	48	61	8.0	51.0	M5x10
GST05	88	58	74	9.0	62.0	M6x12
GST06	109	70	90	10.0	74.0	M8x14
GST07	140	100	120	13.0	97.0	M10x18
GST09	174	120	145	15.0	120.0	M12x20
GST11	215	150	185	18.0	143.0	M16x26
GST14	265	195	230	22.0	187.0	M20x34

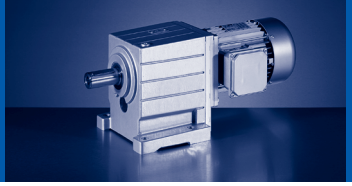

GST□□-2/3M VAL

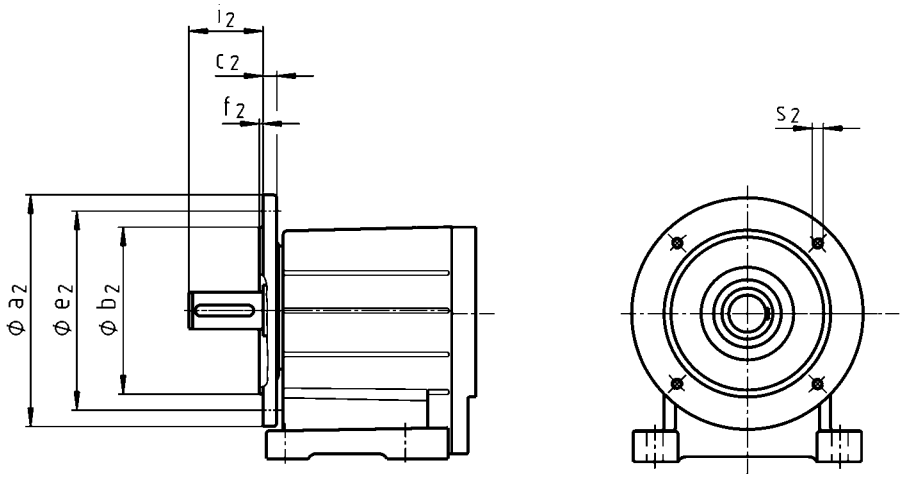

	a_2	b_2	c_2	e_2	f_2	i_2	s_2
		j7					
GST04	120	80	10	100	3.0	40	M6
	140	95		115			M8
GST05	120	80		100		50	M6
	140	95		115			M8
	160	110		130	3.5		
GST06			12			60	
	200	130		165			M10
GST07			14			80	
	250	180	15	215	4.0		M12
GST09			16			100	
	300	230	18	265			
GST11						120	
	350	250	20	300	5.0		M16
GST14			22			160	
	400	300	24	350			

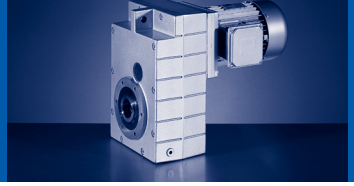

Permissible radial and axial forces at output

Permissible radial force
$F_{rad,per} = \min(f_w \times f_\alpha \times F_{rad,max}\ ;\ f_w \times F_{rad,max}$ at $n_2 \leq 16$ r/min)

Permissible axial force
$F_{ax,per} = F_{ax,max}$ if $F_{rad} = 0$

If F_{rad} **and** $F_{ax} \neq 0$; please contact Lenze.

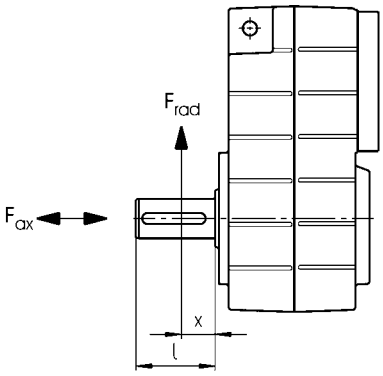

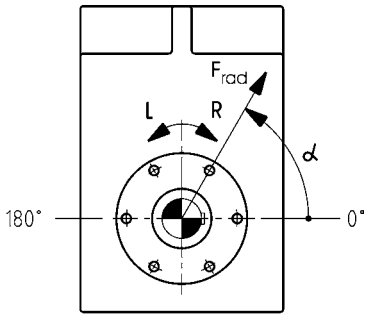

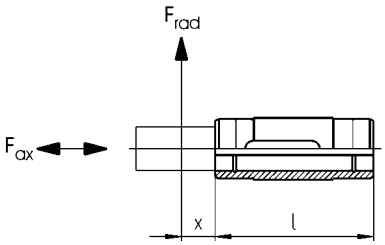

Effective direction factor f_α at output shaft

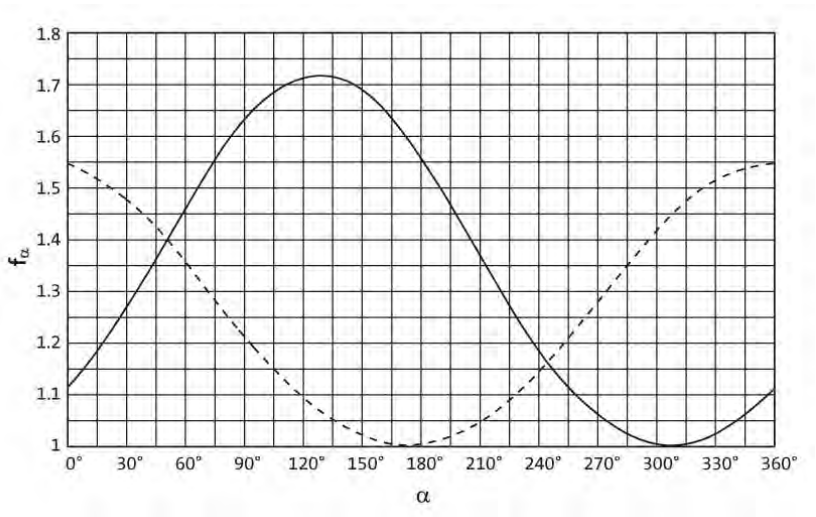

——— Direction of rotation R
— — — Direction of rotation L

Additional load factor f_w at output shaft

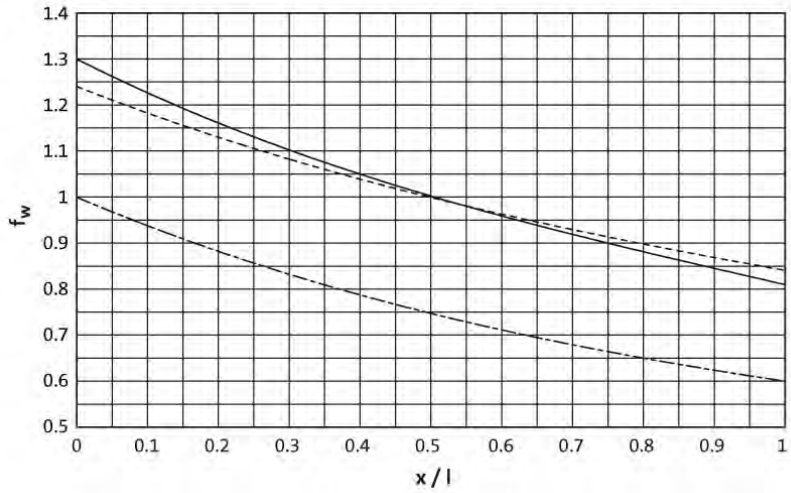

——— Solid shaft (V□□)
— — — Solid shaft with flange (V□K)
— · — Hollow shaft (H□□)

GFL□□-2/3□ H□□

Size	n_2 [r/min]									
Gearbox	1000	630	400	250	160	100	63	40	25	≤16
	Max. radial force, Hollow shaft									
	$F_{rad,max}$ [N]	$F_{rad,max}$ [N]	$F_{rad,max}$ [N]	$F_{rad,max}$ [N]	$F_{rad,max}$ [N]	$F_{rad,max}$ [N]	$F_{rad,max}$ [N]	$F_{rad,max}$ [N]	$F_{rad,max}$ [N]	$F_{rad,max}$ [N]
GFL04	2100	2700	2800	3200	3800	4600	5500	6300	7000	7000
GFL05	1800	2400	3000	3400	4100	5000	6000	7100	8000	8000
GFL06	2400	3300	4300	4700	5000	6600	8500	10800	12000	12000
GFL07	2200	3400	4500	5100	6400	7900	9300	11500	15000	16000
GFL09			5000	6000	7200	10500	13000	15000	22000	24000
GFL11			7300	8700	10000	14200	19000	23000	27000	30000
GFL14			8000	9000	9500	11500	14000	18000	30000	45000
	Max. axial force, Hollow shaft									
	$F_{ax,max}$ [N]	$F_{ax,max}$ [N]	$F_{ax,max}$ [N]	$F_{ax,max}$ [N]	$F_{ax,max}$ [N]	$F_{ax,max}$ [N]	$F_{ax,max}$ [N]	$F_{ax,max}$ [N]	$F_{ax,max}$ [N]	$F_{ax,max}$ [N]
GFL04	1300	1700	2200	2600	3200	4200	5300	5500	5500	5500
GFL05	1600	2200	2800	3600	4200	5900	6600	6600	6600	6600
GFL06	2400	3200	4000	5200	6000	8500	10000	10000	10000	10000
GFL07	2000	2700	3400	4700	6000	8500	12000	14000	14000	14000
GFL09			3100	4200	5800	10000	13500	17000	21000	21000
GFL11			4700	6000	7500	14000	19000	25000	27000	27000
GFL14			4000	5000	6200	7500	11000	17500	31000	35000

- Application of force F_{rad}: at hollow shaft end face (x = 0)
- $F_{ax,max}$ only valid with F_{rad} = 0
- Neither radial nor axial forces are permissible for the hollow shaft with shrink disc (S□□).

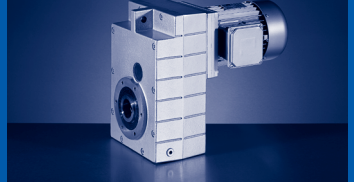

GFL□□-2/3□ V□R

Size	n_2 [r/min]									
Gearbox	1000	630	400	250	160	100	63	40	25	≤16
	Max. radial force, Solid shaft without flange									
	$F_{rad,max}$	$F_{rad,max}$	$F_{rad,max}$	$F_{rad,max}$	$F_{rad,max}$	$F_{rad,max}$	$F_{rad,max}$	$F_{rad,max}$	$F_{rad,max}$	$F_{rad,max}$
	[N]	[N]	[N]	[N]	[N]	[N]	[N]	[N]	[N]	[N]
GFL04	1650	2100	2300	2700	3200	3600	3600	3600	3600	3600
GFL05	1400	1900	2400	2700	3200	4000	4800	5800	6200	6200
GFL06	1850	2500	3200	3600	3900	5100	6500	8400	9000	9000
GFL07	1650	2600	3200	3600	3900	5100	6500	8400	9000	9000
GFL09 [1)]			3800	4400	5500	8000	10000	12000	18000	18000
GFL11 [1)]			5500	6300	7300	11200	14500	17400	20500	23000
GFL14			47000	54000	62000	65000	65000	65000	65000	65000
	Max. axial force, Solid shaft without flange									
	$F_{ax,max}$	$F_{ax,max}$	$F_{ax,max}$	$F_{ax,max}$	$F_{ax,max}$	$F_{ax,max}$	$F_{ax,max}$	$F_{ax,max}$	$F_{ax,max}$	$F_{ax,max}$
	[N]	[N]	[N]	[N]	[N]	[N]	[N]	[N]	[N]	[N]
GFL04	1300	1700	2200	2600	3200	4200	5300	5500	5500	5500
GFL05	1600	2200	2800	3600	4200	5900	6600	6600	6600	6600
GFL06	2400	3200	4000	5200	6000	8500	10000	10000	10000	10000
GFL07	2000	2700	3400	4700	6000	8500	12000	14000	14000	14000
GFL09 [1)]			3100	4200	5800	10000	13500	17000	21000	21000
GFL11 [1)]			4700	6000	7500	14000	19000	25000	27000	27000
GFL14			25000	27000	29000	32000	35000	35000	35000	35000

[1)] Reinforced output shaft bearings are available on request for V□R versions.

- Application of force F_{rad}: centre of shaft journal (x = l/2)
- $F_{ax,max}$ only valid with F_{rad} = 0

GFL□□-2/3□ V□K

Size	n_2 [r/min]									
Gearbox	1000	630	400	250	160	100	63	40	25	≤16
	Max. radial force, Solid shaft with flange									
	$F_{rad,max}$	$F_{rad,max}$	$F_{rad,max}$	$F_{rad,max}$	$F_{rad,max}$	$F_{rad,max}$	$F_{rad,max}$	$F_{rad,max}$	$F_{rad,max}$	$F_{rad,max}$
	[N]	[N]	[N]	[N]	[N]	[N]	[N]	[N]	[N]	[N]
GFL04	2300	2800	3200	3700	4400	4600	4600	4600	4600	4600
GFL05	2900	3700	4300	5100	5900	6800	7000	7000	7000	7000
GFL06	4000	5000	6100	7000	7800	9600	10000	10000	10000	10000
GFL07	4000	5200	6400	7400	8900	10500	12000	13000	14000	14000
GFL09			7800	9000	10500	14000	15000	15000	15000	15000
GFL11			12500	14500	17000	21500	26000	30000	30000	30000
GFL14			18000	20000	23000	27500	32000	38000	43000	43000
	Max. axial force, Solid shaft with flange									
	$F_{ax,max}$	$F_{ax,max}$	$F_{ax,max}$	$F_{ax,max}$	$F_{ax,max}$	$F_{ax,max}$	$F_{ax,max}$	$F_{ax,max}$	$F_{ax,max}$	$F_{ax,max}$
	[N]	[N]	[N]	[N]	[N]	[N]	[N]	[N]	[N]	[N]
GFL04	1300	1700	2200	2600	3200	4200	4400	4400	4400	4400
GFL05	1800	2400	3100	3900	4800	6400	6600	6600	6600	6600
GFL06	2500	3400	4300	5500	6500	8500	10000	10000	10000	10000
GFL07	3600	4800	6100	6500	7000	9500	11500	11500	11500	11500
GFL09			6100	6500	7000	9500	11500	11500	11500	11500
GFL11			6800	8500	10500	17000	22000	27000	27000	27000
GFL14			6000	8000	10000	13000	19000	26000	35000	35000

- Application of force F_{rad}: centre of shaft journal (x = l/2)
- $F_{ax,max}$ only valid with F_{rad} = 0

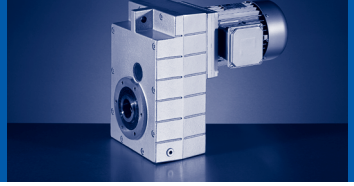

Output backlash in angular minutes

► Backlash φ depending on ratio i

GFL04...14-2

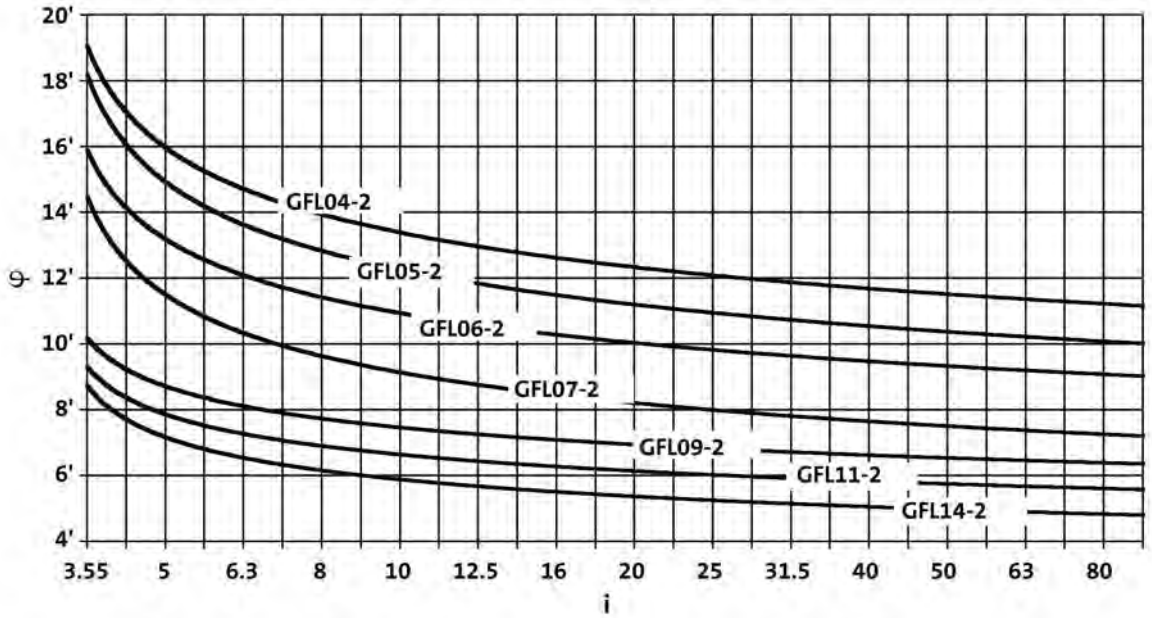

GFL04...14-3

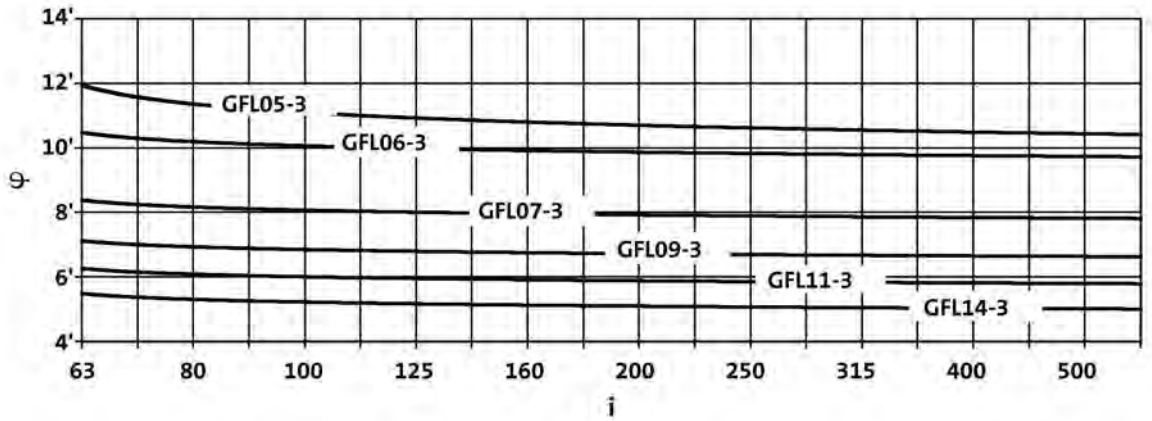

GFL□□-2

► Moment of inertia (J) depending on ratio i

Gearbox			GFL04
3.659	J	[kgcm²]	1.510
5.018	J	[kgcm²]	0.858
5.833	J	[kgcm²]	0.925
6.422	J	[kgcm²]	0.555
7.025	J	[kgcm²]	0.473
8.379	J	[kgcm²]	0.666
9.333	J	[kgcm²]	0.613
10.238	J	[kgcm²]	0.366
11.491	J	[kgcm²]	0.410
12.800	J	[kgcm²]	0.382
14.706	J	[kgcm²]	0.282
16.087	J	[kgcm²]	0.245
17.920	J	[kgcm²]	0.230
20.519	J	[kgcm²]	0.171
22.857	J	[kgcm²]	0.163
25.136	J	[kgcm²]	0.129
28.000	J	[kgcm²]	0.123
31.600	J	[kgcm²]	0.086
35.200	J	[kgcm²]	0.082
40.697	J	[kgcm²]	0.058
45.333	J	[kgcm²]	0.056
51.579	J	[kgcm²]	0.038
57.455	J	[kgcm²]	0.037
64.636	J	[kgcm²]	0.026
72.000	J	[kgcm²]	0.025
85.156	J	[kgcm²]	0.016
94.857	J	[kgcm²]	0.015

Gearbox			GFL05
3.333	J	[kgcm²]	1.677
4.571	J	[kgcm²]	2.133
5.133	J	[kgcm²]	2.372
5.667	J	[kgcm²]	2.329
6.400	J	[kgcm²]	0.822
7.040	J	[kgcm²]	1.470
7.771	J	[kgcm²]	1.450
9.010	J	[kgcm²]	0.951
9.946	J	[kgcm²]	0.885
11.360	J	[kgcm²]	1.082
12.800	J	[kgcm²]	1.012
14.538	J	[kgcm²]	0.746
15.904	J	[kgcm²]	0.603
17.920	J	[kgcm²]	0.609
20.286	J	[kgcm²]	0.428
22.857	J	[kgcm²]	0.434
24.850	J	[kgcm²]	0.345
28.000	J	[kgcm²]	0.331
32.344	J	[kgcm²]	0.204
36.444	J	[kgcm²]	0.195
40.233	J	[kgcm²]	0.148
45.333	J	[kgcm²]	0.142
52.067	J	[kgcm²]	0.093
58.667	J	[kgcm²]	0.090
63.190	J	[kgcm²]	0.068
71.200	J	[kgcm²]	0.064
80.763	J	[kgcm²]	0.043
91.000	J	[kgcm²]	0.042

► The moments of inertia relate to the drive shaft of the gearbox.
► The total moment of inertia is calculated by adding the values of gearbox, motor and accessories.

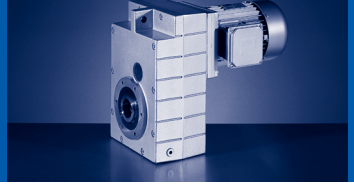

► Moment of inertia (J) depending on ratio i

Gearbox			GFL06
3.675	J	[kgcm²]	7.755
5.211	J	[kgcm²]	6.636
5.750	J	[kgcm²]	6.044
6.450	J	[kgcm²]	3.651
7.147	J	[kgcm²]	4.044
8.400	J	[kgcm²]	4.264
9.463	J	[kgcm²]	3.879
10.092	J	[kgcm²]	2.520
11.520	J	[kgcm²]	1.730
12.978	J	[kgcm²]	2.610
14.743	J	[kgcm²]	1.950
16.128	J	[kgcm²]	1.680
18.169	J	[kgcm²]	1.570
20.571	J	[kgcm²]	1.190
23.175	J	[kgcm²]	1.130
25.200	J	[kgcm²]	0.904
28.389	J	[kgcm²]	0.861
32.800	J	[kgcm²]	0.581
36.951	J	[kgcm²]	0.556
40.800	J	[kgcm²]	0.425
45.963	J	[kgcm²]	0.407
52.800	J	[kgcm²]	0.264
59.481	J	[kgcm²]	0.251
64.080	J	[kgcm²]	0.193
72.189	J	[kgcm²]	0.187
81.000	J	[kgcm²]	0.125
91.250	J	[kgcm²]	0.121

Gearbox			GFL07
3.350	J	[kgcm²]	19.570
4.643	J	[kgcm²]	11.988
5.159	J	[kgcm²]	11.120
5.695	J	[kgcm²]	18.094
6.400	J	[kgcm²]	9.831
7.150	J	[kgcm²]	11.878
8.324	J	[kgcm²]	13.113
9.379	J	[kgcm²]	12.037
9.714	J	[kgcm²]	8.030
11.538	J	[kgcm²]	8.520
13.000	J	[kgcm²]	7.970
14.200	J	[kgcm²]	6.350
15.904	J	[kgcm²]	5.270
17.920	J	[kgcm²]	4.980
20.286	J	[kgcm²]	3.470
22.857	J	[kgcm²]	3.268
24.850	J	[kgcm²]	2.645
28.000	J	[kgcm²]	2.525
32.344	J	[kgcm²]	1.690
36.444	J	[kgcm²]	1.610
39.642	J	[kgcm²]	1.250
44.667	J	[kgcm²]	1.200
52.067	J	[kgcm²]	0.783
58.667	J	[kgcm²]	0.753
63.190	J	[kgcm²]	0.573
71.200	J	[kgcm²]	0.555
79.875	J	[kgcm²]	0.366
90.000	J	[kgcm²]	0.358

► The moments of inertia relate to the drive shaft of the gearbox.
► The total moment of inertia is calculated by adding the values of gearbox, motor and accessories.

► Moment of inertia (J) depending on ratio i

Gearbox			GFL09
6.864	J	[kgcm²]	41.300
7.466	J	[kgcm²]	38.700
9.010	J	[kgcm²]	26.800
9.799	J	[kgcm²]	25.300
11.167	J	[kgcm²]	19.500
12.307	J	[kgcm²]	27.600
14.333	J	[kgcm²]	20.000
16.333	J	[kgcm²]	15.500
18.407	J	[kgcm²]	14.600
19.667	J	[kgcm²]	12.100
22.164	J	[kgcm²]	11.300
24.111	J	[kgcm²]	9.040
27.173	J	[kgcm²]	8.630
32.667	J	[kgcm²]	5.430
36.815	J	[kgcm²]	5.210
39.667	J	[kgcm²]	4.070
44.704	J	[kgcm²]	3.920
51.333	J	[kgcm²]	2.590
57.852	J	[kgcm²]	2.500
62.300	J	[kgcm²]	1.890
70.211	J	[kgcm²]	1.830
78.750	J	[kgcm²]	1.250
88.750	J	[kgcm²]	1.210

Gearbox			GFL11
6.864	J	[kgcm²]	124.000
7.466	J	[kgcm²]	116.000
9.010	J	[kgcm²]	79.600
9.799	J	[kgcm²]	74.800
10.720	J	[kgcm²]	65.000
12.480	J	[kgcm²]	81.500
14.538	J	[kgcm²]	58.400
15.904	J	[kgcm²]	51.300
17.920	J	[kgcm²]	48.300
20.286	J	[kgcm²]	36.100
22.857	J	[kgcm²]	34.300
24.850	J	[kgcm²]	26.900
28.000	J	[kgcm²]	25.700
32.739	J	[kgcm²]	17.100
36.889	J	[kgcm²]	16.500
40.233	J	[kgcm²]	12.600
45.333	J	[kgcm²]	12.200
52.067	J	[kgcm²]	8.080
58.667	J	[kgcm²]	7.810
63.190	J	[kgcm²]	5.900
71.200	J	[kgcm²]	5.720
79.875	J	[kgcm²]	3.870
90.000	J	[kgcm²]	3.760

Gearbox			GFL14
7.150	J	[kgcm²]	344.000
7.777	J	[kgcm²]	321.000
8.800	J	[kgcm²]	247.000
9.571	J	[kgcm²]	232.000
11.538	J	[kgcm²]	242.000
13.000	J	[kgcm²]	225.000
14.200	J	[kgcm²]	625.000
15.620	J	[kgcm²]	156.000
17.600	J	[kgcm²]	146.000
19.948	J	[kgcm²]	111.000
22.476	J	[kgcm²]	105.000
24.456	J	[kgcm²]	83.200
27.556	J	[kgcm²]	79.400
32.344	J	[kgcm²]	52.900
36.444	J	[kgcm²]	50.700
39.642	J	[kgcm²]	38.000
44.667	J	[kgcm²]	36.600
52.067	J	[kgcm²]	24.600
58.667	J	[kgcm²]	23.800
63.190	J	[kgcm²]	18.000
71.200	J	[kgcm²]	17.400
79.875	J	[kgcm²]	11.800
90.000	J	[kgcm²]	11.500

► The moments of inertia relate to the drive shaft of the gearbox.
► The total moment of inertia is calculated by adding the values of gearbox, motor and accessories.

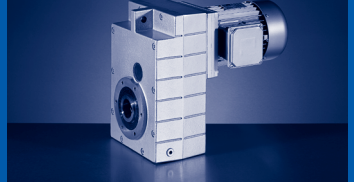

GFL□□-3

► Moment of inertia (J) depending on ratio i

Gearbox			GFL05
61.653	J	[kgcm²]	0.202
78.639	J	[kgcm²]	0.145
90.123	J	[kgcm²]	0.197
101.547	J	[kgcm²]	0.196
114.952	J	[kgcm²]	0.142
129.524	J	[kgcm²]	0.141
140.817	J	[kgcm²]	0.109
158.667	J	[kgcm²]	0.109
177.027	J	[kgcm²]	0.073
199.467	J	[kgcm²]	0.073
227.989	J	[kgcm²]	0.051
256.889	J	[kgcm²]	0.050
288.948	J	[kgcm²]	0.033
325.576	J	[kgcm²]	0.033
362.100	J	[kgcm²]	0.023
408.000	J	[kgcm²]	0.023
477.052	J	[kgcm²]	0.014
537.524	J	[kgcm²]	0.014

Gearbox			GFL06
66.213	J	[kgcm²]	0.292
72.000	J	[kgcm²]	0.264
81.111	J	[kgcm²]	0.259
88.200	J	[kgcm²]	0.190
99.361	J	[kgcm²]	0.187
116.571	J	[kgcm²]	0.091
131.323	J	[kgcm²]	0.208
144.320	J	[kgcm²]	0.110
162.583	J	[kgcm²]	0.109
179.520	J	[kgcm²]	0.102
202.237	J	[kgcm²]	0.101
231.200	J	[kgcm²]	0.068
260.457	J	[kgcm²]	0.067
293.018	J	[kgcm²]	0.044
299.200	J	[kgcm²]	0.064
367.200	J	[kgcm²]	0.030
413.667	J	[kgcm²]	0.030
475.200	J	[kgcm²]	0.029
535.333	J	[kgcm²]	0.028
576.720	J	[kgcm²]	0.028
649.700	J	[kgcm²]	0.028
759.806	J	[kgcm²]	0.017
855.954	J	[kgcm²]	0.017

Gearbox			GFL07
65.306	J	[kgcm²]	0.790
72.452	J	[kgcm²]	0.894
81.636	J	[kgcm²]	0.880
92.413	J	[kgcm²]	0.609
104.127	J	[kgcm²]	0.601
113.206	J	[kgcm²]	0.448
127.556	J	[kgcm²]	0.442
147.347	J	[kgcm²]	0.275
166.025	J	[kgcm²]	0.271
183.285	J	[kgcm²]	0.194
206.519	J	[kgcm²]	0.192
224.636	J	[kgcm²]	0.180
253.111	J	[kgcm²]	0.179
290.706	J	[kgcm²]	0.112
327.556	J	[kgcm²]	0.111
352.811	J	[kgcm²]	0.081
397.533	J	[kgcm²]	0.080
430.222	J	[kgcm²]	0.104
522.133	J	[kgcm²]	0.075
562.391	J	[kgcm²]	0.073
633.680	J	[kgcm²]	0.073
718.786	J	[kgcm²]	0.047
809.900	J	[kgcm²]	0.046

Gearbox			GFL09
63.326	J	[kgcm²]	2.344
73.173	J	[kgcm²]	2.472
82.465	J	[kgcm²]	2.428
93.333	J	[kgcm²]	1.679
105.185	J	[kgcm²]	1.651
114.333	J	[kgcm²]	1.230
128.852	J	[kgcm²]	1.212
148.815	J	[kgcm²]	0.773
167.712	J	[kgcm²]	0.762
185.111	J	[kgcm²]	0.548
208.617	J	[kgcm²]	0.541
224.778	J	[kgcm²]	0.505
253.321	J	[kgcm²]	0.500
290.889	J	[kgcm²]	0.313
327.827	J	[kgcm²]	0.310
353.033	J	[kgcm²]	0.226
397.863	J	[kgcm²]	0.224
424.247	J	[kgcm²]	0.286
514.881	J	[kgcm²]	0.208
554.470	J	[kgcm²]	0.201
624.879	J	[kgcm²]	0.200
700.875	J	[kgcm²]	0.130
789.875	J	[kgcm²]	0.129

► The moments of inertia relate to the drive shaft of the gearbox.
► The total moment of inertia is calculated by adding the values of gearbox, motor and accessories.

► Moment of inertia (J) depending on ratio i

Gearbox			GFL11
65.306	J	[kgcm²]	6.967
73.335	J	[kgcm²]	7.844
82.631	J	[kgcm²]	7.707
93.540	J	[kgcm²]	5.050
105.397	J	[kgcm²]	4.965
114.586	J	[kgcm²]	3.712
129.111	J	[kgcm²]	3.656
149.144	J	[kgcm²]	2.299
168.049	J	[kgcm²]	2.265
182.792	J	[kgcm²]	1.661
205.963	J	[kgcm²]	1.639
224.636	J	[kgcm²]	1.515
253.111	J	[kgcm²]	1.501
267.259	J	[kgcm²]	1.865
327.556	J	[kgcm²]	1.373
358.077	J	[kgcm²]	0.679
403.467	J	[kgcm²]	0.673
430.222	J	[kgcm²]	0.853
522.133	J	[kgcm²]	0.623
562.391	J	[kgcm²]	0.599
633.680	J	[kgcm²]	0.596
710.888	J	[kgcm²]	0.385
801.000	J	[kgcm²]	0.384

Gearbox			GFL14
64.296	J	[kgcm²]	26.316
68.708	J	[kgcm²]	19.862
77.418	J	[kgcm²]	19.381
85.037	J	[kgcm²]	21.590
104.889	J	[kgcm²]	9.324
114.126	J	[kgcm²]	8.318
128.593	J	[kgcm²]	8.144
136.889	J	[kgcm²]	16.779
156.148	J	[kgcm²]	5.917
170.074	J	[kgcm²]	6.962
202.074	J	[kgcm²]	3.692
224.636	J	[kgcm²]	4.742
253.111	J	[kgcm²]	4.697
273.778	J	[kgcm²]	5.759
332.444	J	[kgcm²]	4.300
352.811	J	[kgcm²]	2.163
397.533	J	[kgcm²]	2.145
430.222	J	[kgcm²]	2.727
522.133	J	[kgcm²]	1.984
562.391	J	[kgcm²]	1.910
633.680	J	[kgcm²]	1.903
710.888	J	[kgcm²]	1.259
801.000	J	[kgcm²]	1.254

► The moments of inertia relate to the drive shaft of the gearbox.
► The total moment of inertia is calculated by adding the values of gearbox, motor and accessories.

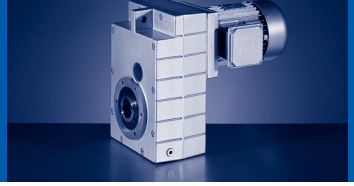

Position of ventilation, sealing elements and oil level check

GFL05...14-2

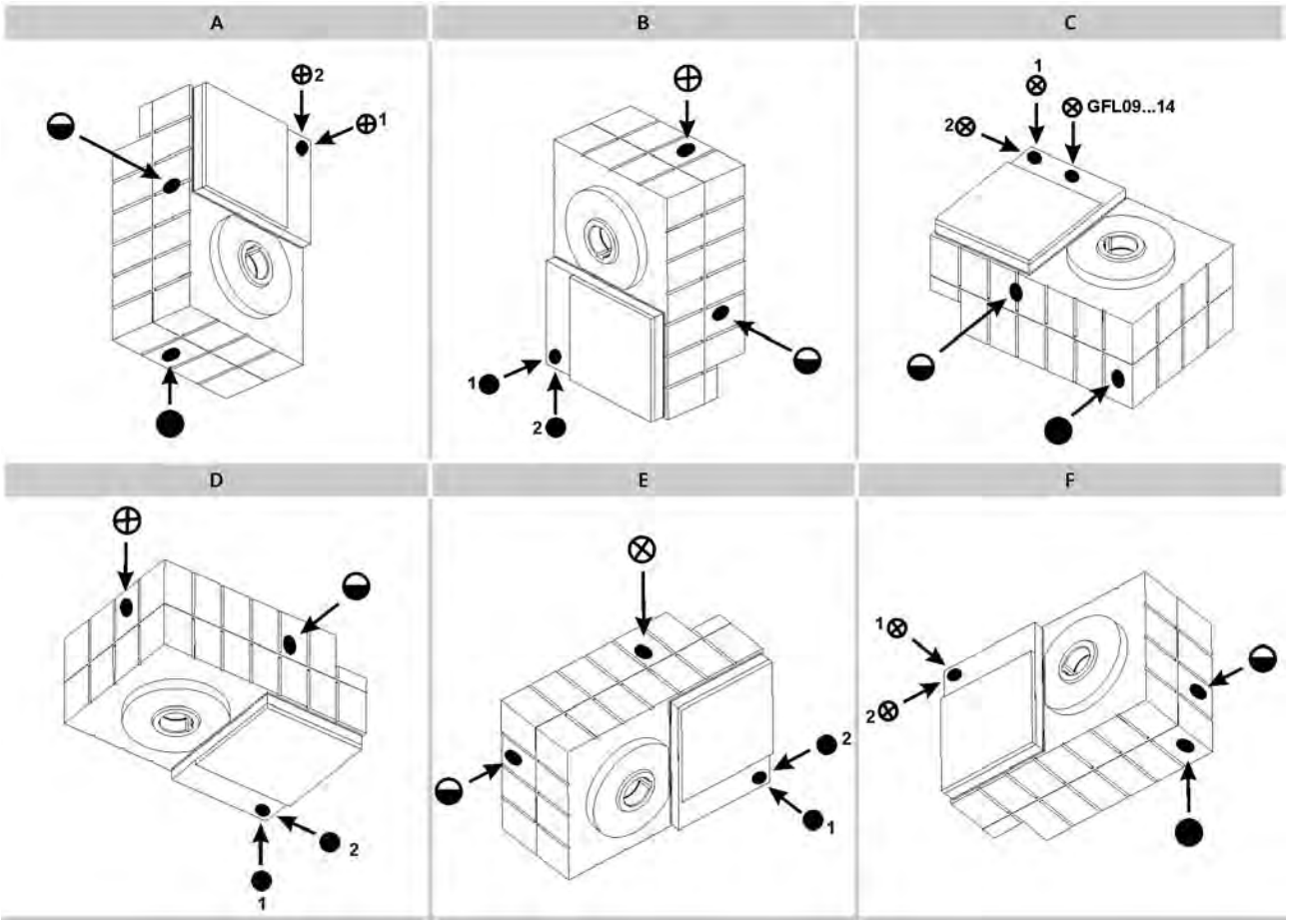

A ... F Mounting position
⊗ Ventilation / Oil filler plug
● Oil drain plug
◒ Oil control plug
* On both sides
** On opposite side

Item 1 standard
Item 2 only with:
- GFL05-2M □□□ 090C□□
- GFL05-2M □□□ 100C□□
- GFL06-2M □□□ 112C□□
- GFL07-2M □□□ 160C□□

GFL05...14-3

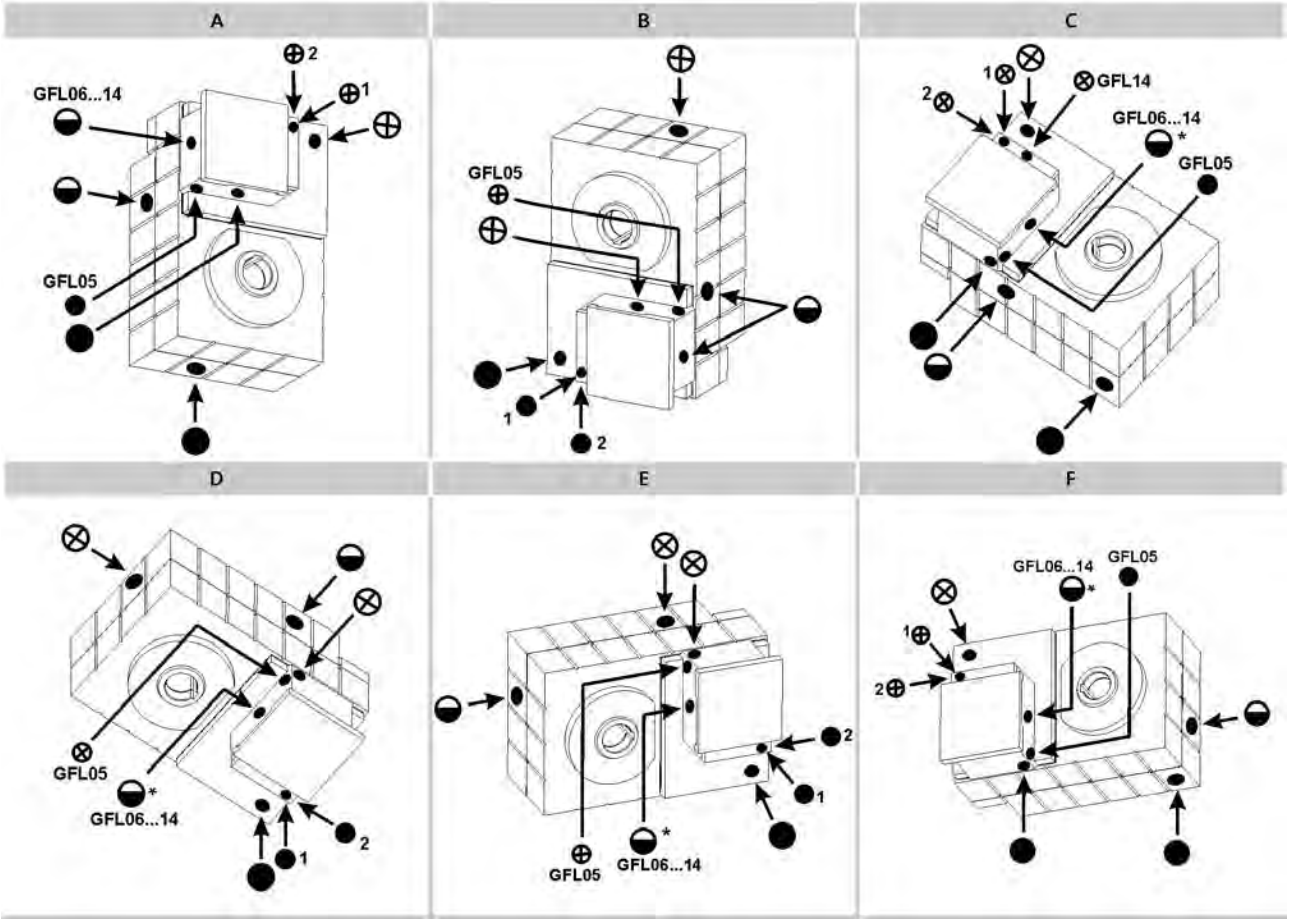

A ... F Mounting position
⊗ Ventilation / Oil filler plug
● Oil drain plug
◒ Oil control plug
* On both sides
** On opposite side

Item 1 standard
Item 2 only with:
- GFL07-3M □□□ 090C□□
- GFL07-3M □□□ 100C□□
- GFL09-3M □□□ 112C□□

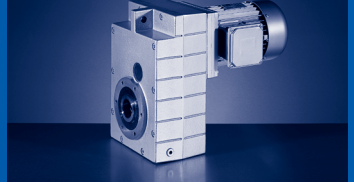

Compensation reservoir for mounting position C

GFL□□-2

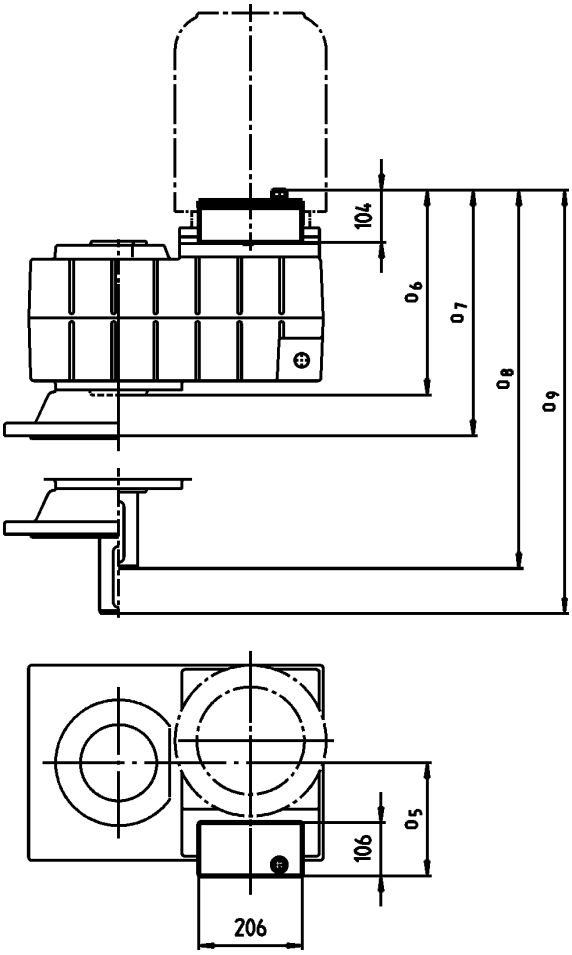

Motor	090 100					112				
	o_5	o_6	o_7	o_8	o_9	o_5	o_6	o_7	o_8	o_9
	[mm]	[mm]	[mm]	[mm]	[mm]	[mm]	[mm]	[mm]	[mm]	[mm]
GFL09	165	344	405	464	525	187	344	405	464	525
GFL11	154	387	448	547	608	176	391	452	551	612
GFL14						181	446	507	646	707

Motor	132					160 180 225				
	o_5	o_6	o_7	o_8	o_9	o_5	o_6	o_7	o_8	o_9
	[mm]	[mm]	[mm]	[mm]	[mm]	[mm]	[mm]	[mm]	[mm]	[mm]
GFL09	204	344	405	464	525	219	344	405	464	525
GFL11	200	391	452	551	612	214	391	452	551	612
GFL14	211	446	507	646	707	211	446	507	646	707

- ► Terminal box position 3 not permitted.
- ► Foot in position 3 not permitted.

GFL□□-2M HCR / HDR

			063C11	063C12	063C31	063C32	063C42	071C11	071C13 071C31	071C32	071C33 071C42	080C11	080C13	080C31	080C32 080C33 080C42	090C11	090C31	090C32
GFL04	m	[kg]	10	11	10	11		13		12	13	17	18	17	18			
GFL05	m	[kg]					24	26				30	31	30	31	38		36
GFL06	m	[kg]					38		40	39	40	44	45	44	45	52		50
GFL07	m	[kg]											71	70	71	78		76
GFL09	m	[kg]															124	122

			100C12	100C31	100C32	100C41	112C22	112C31	112C32	112C41	132C21	132C22 132C32	160C22	160C32	180C12	180C32	180C42	225C12	225C22
GFL05	m	[kg]	45	42	45	42													
GFL06	m	[kg]	59	56	59	56	67	64	74	71									
GFL07	m	[kg]	85	82	85	82	93	90	100	97	132	130	174	194					
GFL09	m	[kg]	131	128	131	128	139	136	146	143	179	177	221	241	276	286	311		
GFL11	m	[kg]	217		217	214	224	221	231	228	262	260	304	324	359	369	394	519	544
GFL14	m	[kg]					366	363	373	370	403	401	445	465	500	510	535	657	682

GFL□□-2M HAR / HBR

			063C11	063C12	063C31	063C32	063C42	071C11	071C13 071C31	071C32	071C33 071C42	080C11	080C13	080C31	080C32 080C33 080C42	090C11	090C31	090C32
GFL04	m	[kg]	11	12	11	12		14		13	14	18	19	18	19			
GFL05	m	[kg]					25	27	28	27	28	31	32	31	32	39		37
GFL06	m	[kg]					41		43	42	43	46	47	46	47	55		53
GFL07	m	[kg]											75	74	75	82		80
GFL09	m	[kg]															131	129

			100C12	100C31	100C32	100C41	112C22	112C31	112C32	112C41	132C21	132C22 132C32	160C22	160C32	180C12	180C32	180C42	225C12	225C22
GFL05	m	[kg]	46	43	46	43													
GFL06	m	[kg]	62	59	62	59	70	67	77	74									
GFL07	m	[kg]	89	86	89	86	97	94	104	101	136	134	178	198					
GFL09	m	[kg]	138	135	138	135	146	143	153	150	186	184	228	248	283	293	318		
GFL11	m	[kg]	231		231	228	238	235	245	242	276	274	318	338	373	383	408	533	558
GFL14	m	[kg]					389	386	396	393	426	424	468	488	523	533	558	680	705

► Weights with oil filling for mounting position A; all values are approximate.
The weights relate to the basic version. Bear in mind that additional weights may be needed (e.g. for motor options).

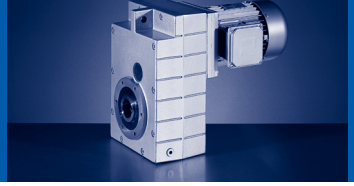

GFL□□-2M HAK

			063C11 063C12 063C31 063C32	063C42	071C11	071C13 071C31	071C32	071C33	071C42	080C11	080C13	080C31	080C32 080C33 080C42	090C11	090C31	090C32	100C12
GFL04	m	[kg]	14		16	17	16	17	16	21	22	21	22				
GFL05	m	[kg]		29	31	32	31	32		35	36	35	36	43		41	50
GFL06	m	[kg]		48		50	49	50		53	54	53	54	62		60	69
GFL07	m	[kg]									86	85	86	93		91	100
GFL09	m	[kg]													147	145	154
GFL11	m	[kg]															255

			100C31	100C32	100C41	112C22	112C31	112C32	112C41	132C21	132C22 132C32	160C22	160C32	180C12	180C32	180C42	225C12	225C22
GFL05	m	[kg]	47	50	47													
GFL06	m	[kg]	66	69	66	77	74	84	81									
GFL07	m	[kg]	97	100	97	108	105	115	112	147	145	189	209					
GFL09	m	[kg]	151	154	151	162	159	169	166	202	200	244	264	299	309	334		
GFL11	m	[kg]		255	252	262	259	269	266	300	298	342	362	397	407	432	557	582
GFL14	m	[kg]				422	419	429	426	459	457	501	521	556	566	591	713	738

GFL□□-2M HCK

			063C11 063C12 063C31 063C32	063C42	071C11	071C13 071C31	071C32	071C33	071C42	080C11	080C13	080C31	080C32 080C33 080C42	090C11	090C31	090C32	100C12
GFL04	m	[kg]	13		15	16	15	16	15	20	21	20	21				
GFL05	m	[kg]		28			30			34	35	34	35	42		40	49
GFL06	m	[kg]		45		47	46	47		51	52	51	52	59		57	66
GFL07	m	[kg]									82	81	82	89		87	96
GFL09	m	[kg]													140	138	147
GFL11	m	[kg]															241

			100C31	100C32	100C41	112C22	112C31	112C32	112C41	132C21	132C22 132C32	160C22	160C32	180C12	180C32	180C42	225C12	225C22
GFL05	m	[kg]	46	49	46													
GFL06	m	[kg]	63	66	63	74	71	81	78									
GFL07	m	[kg]	93	96	93	104	101	111	108	143	141	185	205					
GFL09	m	[kg]	144	147	144	155	152	162	159	195	193	237	257	292	302	327		
GFL11	m	[kg]		241	238	248	245	255	252	286	284	328	348	383	393	418	543	568
GFL14	m	[kg]				399	396	406	403	436	434	478	498	533	543	568	690	715

- Weights with oil filling for mounting position A; all values are approximate.
  The weights relate to the basic version. Bear in mind that additional weights may be needed (e.g. for motor options).

GFL□□-2M VCR / VDR

			063C11 063C12 063C31 063C32	063C42	071C11	071C13 071C31	071C32	071C33 071C42	080C11	080C13	080C31	080C32 080C33 080C42	090C11	090C31	090C32	100C12	100C31
GFL04	m	[kg]	11		13	14	13	14	18	19	18	19	25		23		
GFL05	m	[kg]		25	27				31	32	31	32	39		37	46	43
GFL06	m	[kg]		41		43	42	43	46	47	46	47	55		53	62	59
GFL07	m	[kg]								76	75	76	83		81	90	87
GFL09	m	[kg]												132	130	139	136
GFL11	m	[kg]														233	

			100C32	100C41	112C22	112C31	112C32	112C41	132C21	132C22 132C32	160C22	160C32	180C12	180C32	180C42	225C12	225C22
GFL05	m	[kg]	46	43													
GFL06	m	[kg]	62	59	70	67	77	74									
GFL07	m	[kg]	90	87	98	95	105	102	137	135	179	199					
GFL09	m	[kg]	139	136	147	144	154	151	187	185	229	249	284	294	319		
GFL11	m	[kg]	233	230	240	237	247	244	278	276	320	340	375	385	410	535	560
GFL14	m	[kg]			399	396	406	403	436	434	478	498	533	543	568	690	715

4

GFL□□-2M VAR / VBR

			063C11 063C12 063C31 063C32	063C42	071C11	071C13 071C31	071C32	071C33 071C42	080C11	080C13	080C31	080C32 080C33 080C42	090C11	090C31	090C32	100C12	100C31
GFL04	m	[kg]	12		14	15	14	15	19	20	19	20	26		24		
GFL05	m	[kg]		26	28	29	28	29	32	33	32	33	40		38	47	44
GFL06	m	[kg]		43		45	44	45	49	50	49	50	57		55	64	61
GFL07	m	[kg]								80	79	80	87		85	94	91
GFL09	m	[kg]												139	137	146	143
GFL11	m	[kg]														247	

			100C32	100C41	112C22	112C31	112C32	112C41	132C21	132C22 132C32	160C22	160C32	180C12	180C32	180C42	225C12	225C22
GFL05	m	[kg]	47	44													
GFL06	m	[kg]	64	61	72	69	79	76									
GFL07	m	[kg]	94	91	102	99	109	106	141	139	183	203					
GFL09	m	[kg]	146	143	154	151	161	158	194	192	236	256	291	301	326		
GFL11	m	[kg]	247	244	254	251	261	258	292	290	334	354	389	399	424	549	574
GFL14	m	[kg]			422	419	429	426	459	457	501	521	556	566	591	713	738

► Weights with oil filling for mounting position A; all values are approximate.
The weights relate to the basic version. Bear in mind that additional weights may be needed (e.g. for motor options).

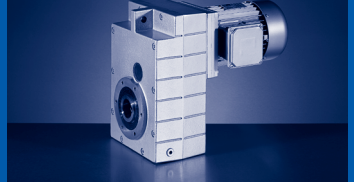

GFL□□-2M VAK

			063C11	063C12	063C31	063C32	063C42	071C11	071C13 071C31	071C32	071C33 071C42	080C11	080C13	080C31	080C32 080C33 080C42	090C11	090C31	090C32
GFL04	m	[kg]	14	15	14	15		17		16	17	21	22	21	22	29		27
GFL05	m	[kg]					30	32	33	32	33	36	37	36	37	44		42
GFL06	m	[kg]					50		52	51	52	56	57	56	57	64		62
GFL07	m	[kg]											91	90	91	98		96
GFL09	m	[kg]															155	153

			100C12	100C31	100C32	100C41	112C22	112C31	112C32	112C41	132C21	132C22 132C32	160C22	160C32	180C12	180C32	180C42	225C12	225C22
GFL05	m	[kg]	51	48	51	48													
GFL06	m	[kg]	71	68	71	68	79	76	86	83									
GFL07	m	[kg]	105	102	105	102	113	110	120	117	152	150	194	214					
GFL09	m	[kg]	162	159	162	159	170	167	177	174	210	208	252	272	307	317	342		
GFL11	m	[kg]	271		271	268	278	275	285	282	316	314	358	378	413	423	448	573	598
GFL14	m	[kg]					455	452	462	459	492	490	534	554	589	599	624	746	771

GFL□□-2M VCK

			063C11	063C12	063C31	063C32	063C42	071C11	071C13 071C31	071C32	071C33 071C42	080C11	080C13	080C31	080C32 080C33 080C42	090C11	090C31	090C32
GFL04	m	[kg]	13	14	13	14		16		15	16	20	21	20	21	28		26
GFL05	m	[kg]					29	31				35	36	35	36	43		41
GFL06	m	[kg]					48		50	49	50	53	54	53	54	62		60
GFL07	m	[kg]											87	86	87	94		92
GFL09	m	[kg]															148	146

			100C12	100C31	100C32	100C41	112C22	112C31	112C32	112C41	132C21	132C22 132C32	160C22	160C32	180C12	180C32	180C42	225C12	225C22
GFL05	m	[kg]	50	47	50	47													
GFL06	m	[kg]	69	66	69	66	77	74	84	81									
GFL07	m	[kg]	101	98	101	98	109	106	116	113	148	146	190	210					
GFL09	m	[kg]	155	152	155	152	163	160	170	167	203	201	245	265	300	310	335		
GFL11	m	[kg]	257		257	254	264	261	271	268	302	300	344	364	399	409	434	559	584
GFL14	m	[kg]					432	429	439	436	469	467	511	531	566	576	601	723	748

► Weights with oil filling for mounting position A; all values are approximate.
The weights relate to the basic version. Bear in mind that additional weights may be needed (e.g. for motor options).

GFL□□-2M SCR / SDR

			063C11 063C12 063C31 063C32	063C42	071C11	071C13 071C31	071C32	071C33 071C42	080C11	080C13	080C31	080C32 080C33 080C42	090C11	090C31	090C32	100C12	100C31
GFL04	m	[kg]	11		13	14	13	14	18	19	18	19	25		23		
GFL05	m	[kg]		25	27		26	27	31	32	31	32	39		37	46	43
GFL06	m	[kg]		39		41	40	41	45	46	45	46	53		51	60	57
GFL07	m	[kg]								72	71	72	79		77	86	83
GFL09	m	[kg]												127	125	134	131
GFL11	m	[kg]														222	

			100C32	100C41	112C22	112C31	112C32	112C41	132C21	132C22 132C32	160C22	160C32	180C12	180C32	180C42	225C12	225C22
GFL05	m	[kg]	46	43													
GFL06	m	[kg]	60	57	68	65	75	72									
GFL07	m	[kg]	86	83	95	92	102	99	133	131	175	195					
GFL09	m	[kg]	134	131	142	139	149	146	182	180	224	244	279	289	314		
GFL11	m	[kg]	222	219	229	226	236	233	267	265	309	329	364	374	399	524	549
GFL14	m	[kg]			377	374	384	381	414	412	456	476	511	521	546	668	693

4

GFL□□-2M SAR / SBR

			063C11 063C12 063C31 063C32	063C42	071C11	071C13 071C31	071C32	071C33 071C42	080C11	080C13	080C31	080C32 080C33 080C42	090C11	090C31	090C32	100C12	100C31
GFL04	m	[kg]	12		14	15	14	15	19	20	19	20	26		24		
GFL05	m	[kg]		26	28	29	28	29	32	33	32	33	40		38	47	44
GFL06	m	[kg]		42		44	43	44	47	48	47	48	56		54	63	60
GFL07	m	[kg]								76	75	76	83		81	90	87
GFL09	m	[kg]												134	132	141	138
GFL11	m	[kg]														236	

			100C32	100C41	112C22	112C31	112C32	112C41	132C21	132C22 132C32	160C22	160C32	180C12	180C32	180C42	225C12	225C22
GFL05	m	[kg]	47	44													
GFL06	m	[kg]	63	60	71	68	78	75									
GFL07	m	[kg]	90	87	99	96	106	103	137	135	179	199					
GFL09	m	[kg]	141	138	149	146	156	153	189	187	231	251	286	296	321		
GFL11	m	[kg]	236	233	243	240	250	247	281	279	323	343	378	388	413	538	563
GFL14	m	[kg]			400	397	407	404	437	435	479	499	534	544	569	691	716

- Weights with oil filling for mounting position A; all values are approximate.
  The weights relate to the basic version. Bear in mind that additional weights may be needed (e.g. for motor options).

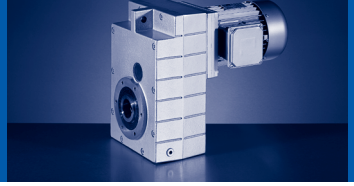

GFL□□-2M SAK

			063C42	071C11	071C13 071C31	071C32	071C33 071C42	080C11	080C13	080C31	080C32 080C33 080C42	090C11	090C31	090C32	100C12	100C31
GFL05	m	[kg]	30	32	33	32	33	36	37	36	37	44		42	51	48
GFL06	m	[kg]	49		51	50	51	54	55	54	55	63		61	70	67
GFL07	m	[kg]							87	86	87	94		92	101	98
GFL09	m	[kg]											150	148	157	154
GFL11	m	[kg]													260	

			100C32	100C41	112C22	112C31	112C32	112C41	132C21	132C22 132C32	160C22	160C32	180C12	180C32	180C42	225C12	225C22
GFL05	m	[kg]	51	48													
GFL06	m	[kg]	70	67	78	75	85	82									
GFL07	m	[kg]	101	98	110	107	117	114	148	146	190	210					
GFL09	m	[kg]	157	154	165	162	172	169	205	203	247	267	302	312	337		
GFL11	m	[kg]	260	257	267	264	274	271	305	303	347	367	402	412	437	562	587
GFL14	m	[kg]			433	430	440	437	470	468	512	532	567	577	602	724	749

GFL□□-2M SCK

			063C42	071C11	071C13 071C31	071C32	071C33 071C42	080C11	080C13	080C31	080C32 080C33 080C42	090C11	090C31	090C32	100C12	100C31
GFL05	m	[kg]	29	31		30	31	35	36	35	36	43		41	50	47
GFL06	m	[kg]	46		48	47	48	52	53	52	53	60		58	67	64
GFL07	m	[kg]							83	82	83	90		88	97	94
GFL09	m	[kg]											143	141	150	147
GFL11	m	[kg]													246	

			100C32	100C41	112C22	112C31	112C32	112C41	132C21	132C22 132C32	160C22	160C32	180C12	180C32	180C42	225C12	225C22
GFL05	m	[kg]	50	47													
GFL06	m	[kg]	67	64	75	72	82	79									
GFL07	m	[kg]	97	94	106	103	113	110	144	142	186	206					
GFL09	m	[kg]	150	147	158	155	165	162	198	196	240	260	295	305	330		
GFL11	m	[kg]	246	243	253	250	260	257	291	289	333	353	388	398	423	548	573
GFL14	m	[kg]			410	407	417	414	447	445	489	509	544	554	579	701	726

► Weights with oil filling for mounting position A; all values are approximate.
The weights relate to the basic version. Bear in mind that additional weights may be needed (e.g. for motor options).

GFL□□-3M HCR / HDR

			063C11	063C12	063C31	063C32	063C42	071C11	071C13 071C31	071C32	071C33	071C42	080C11	080C13	080C31	080C32 080C33 080C42
GFL05	m	[kg]	24	25	24	25		27		26	27		31	32	31	
GFL06	m	[kg]	41				42	43	44	43	44		48	49	48	49
GFL07	m	[kg]					72	74					78	79	78	79
GFL09	m	[kg]					123	125	126	125	126	125	129	130	129	130
GFL11	m	[kg]											222	223	222	223

			090C11 090C31	090C32	100C12	100C31	100C32	100C41	112C22	112C31	112C32	112C41	132C21	132C22 132C32	160C22	160C32
GFL06	m	[kg]	55													
GFL07	m	[kg]	86	84	93	90		90								
GFL09	m	[kg]	137	135	144	141	144	141	153	150		157				
GFL11	m	[kg]	230	228	237	234	237	234	246	243	253	250	285	283		
GFL14	m	[kg]	387	385	394	391	394	391	402	399	409	406	441	439	483	503

GFL□□-3M HAR / HBR

			063C11 063C12 063C31 063C32	063C42	071C11	071C13 071C31	071C32	071C33	071C42	080C11	080C13	080C31	080C32 080C33 080C42	090C11 090C31
GFL05	m	[kg]	26		28	29	28	29	28	33	34	33		
GFL06	m	[kg]	44		46					50	51	50	51	58
GFL07	m	[kg]		76	78					82	83	82	83	90
GFL09	m	[kg]		130	132	133	132	133	132	136	137	136	137	144
GFL11	m	[kg]								236	237	236	237	244
GFL14	m	[kg]												410

			090C32	100C12	100C31	100C32	100C41	112C22	112C31	112C32	112C41	132C21	132C22 132C32	160C22	160C32
GFL07	m	[kg]	88	97	94		94								
GFL09	m	[kg]	142	151	148	151	148	160	157		164				
GFL11	m	[kg]	242	251	248	251	248	260	257	267	264	299	297		
GFL14	m	[kg]	408	417	414	417	414	425	422	432	429	464	462	506	526

► Weights with oil filling for mounting position A; all values are approximate.
The weights relate to the basic version. Bear in mind that additional weights may be needed (e.g. for motor options).

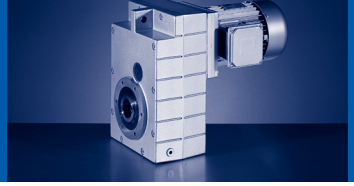

GFL□□-3M HAK

			063C11 063C12 063C31 063C32	063C42	071C11	071C13 071C31	071C32	071C33	071C42	080C11	080C13	080C31	080C32 080C33 080C42	090C11 090C31
GFL05	m	[kg]	30		32	33	32	33	32	37	38	37		
GFL06	m	[kg]	51		53					57	58	57	58	65
GFL07	m	[kg]		87	89					93	94	93	94	101
GFL09	m	[kg]		146	148	149	148	149	148	152	153	152	153	160
GFL11	m	[kg]								260	261	260	261	268
GFL14	m	[kg]												443

			090C32	100C12	100C31	100C32	100C41	112C22	112C31	112C32	112C41	132C21	132C22 132C32	160C22	160C32
GFL07	m	[kg]	99	108	105		105								
GFL09	m	[kg]	158	167	164	167	164	176	173		180				
GFL11	m	[kg]	266	275	272	275	272	284	281	291	288	323	321		
GFL14	m	[kg]	441	450	447	450	447	458	455	465	462	497	495	539	559

GFL□□-3M HCK

			063C11	063C12	063C31	063C32	063C42	071C11	071C13 071C31	071C32	071C33	071C42	080C11	080C13	080C31	080C32 080C33 080C42
GFL05	m	[kg]	28	29	28	29		31		30	31		35	36	35	
GFL06	m	[kg]	48				49	50	51	50	51		55	56	55	56
GFL07	m	[kg]					83	85					89	90	89	90
GFL09	m	[kg]					139	141	142	141	142	141	145	146	145	146
GFL11	m	[kg]											246	247	246	247

			090C11 090C31	090C32	100C12	100C31	100C32	100C41	112C22	112C31	112C32	112C41	132C21	132C22 132C32	160C22	160C32
GFL06	m	[kg]	62													
GFL07	m	[kg]	97	95	104	101		101								
GFL09	m	[kg]	153	151	160	157	160	157	169	166		173				
GFL11	m	[kg]	254	252	261	258	261	258	270	267	277	274	309	307		
GFL14	m	[kg]	420	418	427	424	427	424	435	432	442	439	474	472	516	536

- Weights with oil filling for mounting position A; all values are approximate.
  The weights relate to the basic version. Bear in mind that additional weights may be needed (e.g. for motor options).

GFL□□-3M VCR / VDR

			063C11	063C12	063C31	063C32	063C42	071C11	071C13 071C31	071C32	071C33	071C42	080C11	080C13	080C31	080C32 080C33 080C42
GFL05	m	[kg]	25	26	25	26		28		27	28		32	33	32	
GFL06	m	[kg]			44					46			50	51	50	51
GFL07	m	[kg]					77			79			83	84	83	84
GFL09	m	[kg]					131	133	134	133	134	133	137	138	137	138
GFL11	m	[kg]											238	239	238	239

			090C11 090C31	090C32	100C12	100C31	100C32	100C41	112C22	112C31	112C32	112C41	132C21	132C22 132C32	160C22	160C32
GFL06	m	[kg]	58													
GFL07	m	[kg]	91	89	98	95		95								
GFL09	m	[kg]	145	143	152	149	152	149	161	158		165				
GFL11	m	[kg]	246	244	253	250	253	250	262	259	269	266	301	299		
GFL14	m	[kg]	420	418	427	424	427	424	435	432	442	439	474	472	516	536

GFL□□-3M VAR / VBR

			063C11 063C12 063C31 063C32	063C42	071C11	071C13 071C31	071C32	071C33	071C42	080C11	080C13	080C31	080C32 080C33 080C42	090C11 090C31
GFL05	m	[kg]	27		29	30	29	30	29	34	35	34		
GFL06	m	[kg]	46	47	48	49	48	49		53	54	53	54	60
GFL07	m	[kg]		81			83			87	88	87	88	95
GFL09	m	[kg]		138	140	141	140	141	140	144	145	144	145	152
GFL11	m	[kg]								252	253	252	253	260
GFL14	m	[kg]												443

			090C32	100C12	100C31	100C32	100C41	112C22	112C31	112C32	112C41	132C21	132C22 132C32	160C22	160C32
GFL07	m	[kg]	93	102	99		99								
GFL09	m	[kg]	150	159	156	159	156	168	165		172				
GFL11	m	[kg]	258	267	264	267	264	276	273	283	280	315	313		
GFL14	m	[kg]	441	450	447	450	447	458	455	465	462	497	495	539	559

- Weights with oil filling for mounting position A; all values are approximate.
  The weights relate to the basic version. Bear in mind that additional weights may be needed (e.g. for motor options).

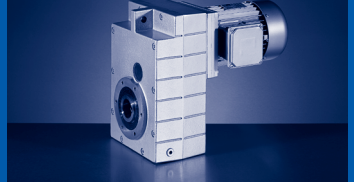

GFL□□-3M VAK

			063C11 063C12 063C31 063C32	063C42	071C11	071C13 071C31	071C32	071C33	071C42	080C11	080C13	080C31	080C32 080C33 080C42	090C11 090C31
GFL05	m	[kg]	31		33	34	33	34	33	38	39	38		
GFL06	m	[kg]	53	54	55	56	55	56		60	61	60	61	67
GFL07	m	[kg]		92	94					98	99	98	99	106
GFL09	m	[kg]		154	156	157	156	157	156	160	161	160	161	168
GFL11	m	[kg]								276	277	276	277	284
GFL14	m	[kg]												476

			090C32	100C12	100C31	100C32	100C41	112C22	112C31	112C32	112C41	132C21	132C22 132C32	160C22	160C32
GFL07	m	[kg]	104	113	110		110								
GFL09	m	[kg]	166	175	172	175	172	184	181		188				
GFL11	m	[kg]	282	291	288	291	288	300	297	307	304	339	337		
GFL14	m	[kg]	474	483	480	483	480	491	488	498	495	530	528	572	592

GFL□□-3M VCK

			063C11	063C12	063C31	063C32	063C42	071C11	071C13 071C31	071C32	071C33	071C42	080C11	080C13	080C31	080C32 080C33 080C42
GFL05	m	[kg]	29	30	29	30		32		31	32		36	37	36	
GFL06	m	[kg]			51					53			57	58	57	58
GFL07	m	[kg]					88			90			94	95	94	95
GFL09	m	[kg]					147	149	150	149	150	149	153	154	153	154
GFL11	m	[kg]											262	263	262	263

			090C11 090C31	090C32	100C12	100C31	100C32	100C41	112C22	112C31	112C32	112C41	132C21	132C22 132C32	160C22	160C32
GFL06	m	[kg]	65													
GFL07	m	[kg]	102	100	109	106		106								
GFL09	m	[kg]	161	159	168	165	168	165	177	174		181				
GFL11	m	[kg]	270	268	277	274	277	274	286	283	293	290	325	323		
GFL14	m	[kg]	453	451	460	457	460	457	468	465	475	472	507	505	549	569

► Weights with oil filling for mounting position A; all values are approximate.
The weights relate to the basic version. Bear in mind that additional weights may be needed (e.g. for motor options).

GFL□□-3M SCR / SDR

			063C11 063C12 063C31 063C32	063C42	071C11	071C13 071C31	071C32	071C33	071C42	080C11	080C13	080C31	080C32 080C33 080C42	090C11 090C31
GFL05	m	[kg]	25	26	27	28	27	28		32	33	32		
GFL06	m	[kg]	42	43	44	45	44	45		49	50	49	50	56
GFL07	m	[kg]		73	75	76	75	76		79	80	79	80	87
GFL09	m	[kg]		126	128	129	128	129	128	132	133	132	133	140
GFL11	m	[kg]								227	228	227	228	235
GFL14	m	[kg]												398

			090C32	100C12	100C31	100C32	100C41	112C22	112C31	112C32	112C41	132C21	132C22 132C32	160C22	160C32
GFL07	m	[kg]	85	94	91		91								
GFL09	m	[kg]	138	147	144	147	144	156	153		160				
GFL11	m	[kg]	233	242	239	242	239	251	248	258	255	290	288		
GFL14	m	[kg]	396	405	402	405	402	413	410	420	417	452	450	494	514

GFL□□-3M SAR / SBR

			063C11 063C12 063C31 063C32	063C42	071C11	071C13 071C31	071C32	071C33	071C42	080C11	080C13	080C31	080C32 080C33 080C42	090C11 090C31
GFL05	m	[kg]	27		29					33	34	33		
GFL06	m	[kg]	45		47					51	52	51	52	59
GFL07	m	[kg]		77	79	80	79	80		83	84	83	84	91
GFL09	m	[kg]		133	135	136	135	136	135	139	140	139	140	147
GFL11	m	[kg]								241	242	241	242	249
GFL14	m	[kg]												421

			090C32	100C12	100C31	100C32	100C41	112C22	112C31	112C32	112C41	132C21	132C22 132C32	160C22	160C32
GFL07	m	[kg]	89	98	95		95								
GFL09	m	[kg]	145	154	151	154	151	163	160		167				
GFL11	m	[kg]	247	256	253	256	253	265	262	272	269	304	302		
GFL14	m	[kg]	419	428	425	428	425	436	433	443	440	475	473	517	537

► Weights with oil filling for mounting position A; all values are approximate.
The weights relate to the basic version. Bear in mind that additional weights may be needed (e.g. for motor options).

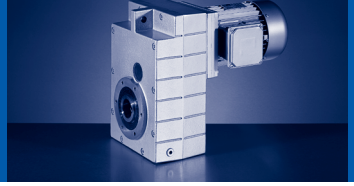

GFL□□-3M SAK

			063C11 063C12 063C31 063C32	063C42	071C11	071C13 071C31	071C32	071C33	071C42	080C11	080C13	080C31	080C32 080C33 080C42	090C11 090C31
GFL05	m	[kg]	31		33					37	38	37		
GFL06	m	[kg]	52		54					58	59	58	59	66
GFL07	m	[kg]		88	90	91	90	91		94	95	94	95	102
GFL09	m	[kg]		149	151	152	151	152	151	155	156	155	156	163
GFL11	m	[kg]								265	266	265	266	273
GFL14	m	[kg]												454

			090C32	100C12	100C31	100C32	100C41	112C22	112C31	112C32	112C41	132C21	132C22 132C32	160C22	160C32
GFL07	m	[kg]	100	109	106		106								
GFL09	m	[kg]	161	170	167	170	167	179	176		183				
GFL11	m	[kg]	271	280	277	280	277	289	286	296	293	328	326		
GFL14	m	[kg]	452	461	458	461	458	469	466	476	473	508	506	550	570

GFL□□-3M SCK

			063C11 063C12 063C31 063C32	063C42	071C11	071C13 071C31	071C32	071C33	071C42	080C11	080C13	080C31	080C32 080C33 080C42	090C11 090C31
GFL05	m	[kg]	29	30	31	32	31	32		36	37	36		
GFL06	m	[kg]	49	50	51	52	51	52		56	57	56	57	63
GFL07	m	[kg]		84	86	87	86	87		90	91	90	91	98
GFL09	m	[kg]		142	144	145	144	145	144	148	149	148	149	156
GFL11	m	[kg]								251	252	251	252	259
GFL14	m	[kg]												431

			090C32	100C12	100C31	100C32	100C41	112C22	112C31	112C32	112C41	132C21	132C22 132C32	160C22	160C32
GFL07	m	[kg]	96	105	102		102								
GFL09	m	[kg]	154	163	160	163	160	172	169		176				
GFL11	m	[kg]	257	266	263	266	263	275	272	282	279	314	312		
GFL14	m	[kg]	429	438	435	438	435	446	443	453	450	485	483	527	547

► Weights with oil filling for mounting position A; all values are approximate.
The weights relate to the basic version. Bear in mind that additional weights may be needed (e.g. for motor options).

GFL□□-2M HCR / HDR

			080C32	090C12	090C32	100C12	100C32	112C22	132C12
GFL04	m	[kg]	18						
GFL05	m	[kg]	31	37	39	45	47		
GFL06	m	[kg]	45	51	53	59	62	74	97
GFL07	m	[kg]	71	77	79	85	87	100	123
GFL09	m	[kg]		123	125	131	134	146	170
GFL11	m	[kg]				217	219	231	253
GFL14	m	[kg]						373	394

			132C22	160C22	160C32	180C12	180C32	180C42	225C12	225C22
GFL06	m	[kg]	104							
GFL07	m	[kg]	130	173	188					
GFL09	m	[kg]	177	220	235	286	291	311		
GFL11	m	[kg]	260	303	318	369	374	394	594	614
GFL14	m	[kg]	401	444	459	510	515	535	732	752

GFL□□-2M HAR / HBR

			080C32	090C12	090C32	100C12	100C32	112C22	132C12
GFL04	m	[kg]	19						
GFL05	m	[kg]	32	38	40	46	49		
GFL06	m	[kg]	47	54	56	62	64	77	99
GFL07	m	[kg]	75	81	83	89	91	104	127
GFL09	m	[kg]		130	132	138	141	153	177
GFL11	m	[kg]				231	233	245	267
GFL14	m	[kg]						396	417

			132C22	160C22	160C32	180C12	180C32	180C42	225C12	225C22
GFL06	m	[kg]	106							
GFL07	m	[kg]	134	177	192					
GFL09	m	[kg]	184	227	242	293	298	318		
GFL11	m	[kg]	274	317	332	383	388	408	608	628
GFL14	m	[kg]	424	467	482	533	538	558	755	775

► Weights with oil filling for mounting position A; all values are approximate.
The weights relate to the basic version. Bear in mind that additional weights may be needed (e.g. for motor options).

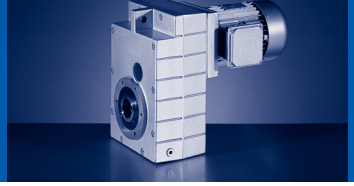

GFL□□-2M HAK

			080C32	090C12	090C32	100C12	100C32	112C22	132C12
GFL04	m	[kg]	22						
GFL05	m	[kg]	36	42	44	50	53		
GFL06	m	[kg]	54	61	63	69	71	84	106
GFL07	m	[kg]	86	92	94	100	102	115	138
GFL09	m	[kg]		146	148	154	157	169	193
GFL11	m	[kg]				255	257	269	291
GFL14	m	[kg]						429	450

			132C22	160C22	160C32	180C12	180C32	180C42	225C12	225C22
GFL06	m	[kg]	113							
GFL07	m	[kg]	145	188	203					
GFL09	m	[kg]	200	243	258	309	314	334		
GFL11	m	[kg]	298	341	356	407	412	432	632	652
GFL14	m	[kg]	457	500	515	566	571	591	788	808

GFL□□-2M HCK

			080C32	090C12	090C32	100C12	100C32	112C22	132C12
GFL04	m	[kg]	21						
GFL05	m	[kg]	35	41	43	49	51		
GFL06	m	[kg]	52	58	60	66	69	81	104
GFL07	m	[kg]	82	88	90	96	98	111	134
GFL09	m	[kg]		139	141	147	150	162	186
GFL11	m	[kg]				241	243	255	277
GFL14	m	[kg]						406	427

			132C22	160C22	160C32	180C12	180C32	180C42	225C12	225C22
GFL06	m	[kg]	111							
GFL07	m	[kg]	141	184	199					
GFL09	m	[kg]	193	236	251	302	307	327		
GFL11	m	[kg]	284	327	342	393	398	418	618	638
GFL14	m	[kg]	434	477	492	543	548	568	765	785

► Weights with oil filling for mounting position A; all values are approximate.
The weights relate to the basic version. Bear in mind that additional weights may be needed (e.g. for motor options).

GFL□□-2M VCR / VDR

			080C32	090C12	090C32	100C12	100C32	112C22	132C12
GFL04	m	[kg]	19	24	26				
GFL05	m	[kg]	32	38	40	46	48		
GFL06	m	[kg]	47	54	56	62	64	77	99
GFL07	m	[kg]	76	82	84	90	92	105	128
GFL09	m	[kg]		131	133	139	142	154	178
GFL11	m	[kg]				233	235	247	269
GFL14	m	[kg]						406	427

			132C22	160C22	160C32	180C12	180C32	180C42	225C12	225C22
GFL06	m	[kg]	106							
GFL07	m	[kg]	135	178	193					
GFL09	m	[kg]	185	228	243	294	299	319		
GFL11	m	[kg]	276	319	334	385	390	410	610	630
GFL14	m	[kg]	434	477	492	543	548	568	765	785

GFL□□-2M VAR / VBR

			080C32	090C12	090C32	100C12	100C32	112C22	132C12
GFL04	m	[kg]	20	25	27				
GFL05	m	[kg]	33	39	41	47	50		
GFL06	m	[kg]	50	56	58	64	67	79	102
GFL07	m	[kg]	80	86	88	94	96	109	132
GFL09	m	[kg]		138	140	146	149	161	185
GFL11	m	[kg]				247	249	261	283
GFL14	m	[kg]						429	450

			132C22	160C22	160C32	180C12	180C32	180C42	225C12	225C22
GFL06	m	[kg]	109							
GFL07	m	[kg]	139	182	197					
GFL09	m	[kg]	192	235	250	301	306	326		
GFL11	m	[kg]	290	333	348	399	404	424	624	644
GFL14	m	[kg]	457	500	515	566	571	591	788	808

► Weights with oil filling for mounting position A; all values are approximate.
The weights relate to the basic version. Bear in mind that additional weights may be needed (e.g. for motor options).

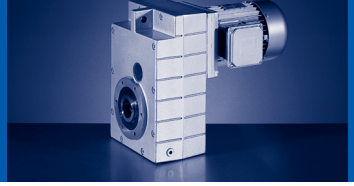

GFL□□-2M VAK

			080C32	090C12	090C32	100C12	100C32	112C22	132C12
GFL04	m	[kg]	22	28	30				
GFL05	m	[kg]	37	43	45	51	54		
GFL06	m	[kg]	57	63	65	71	74	86	109
GFL07	m	[kg]	91	97	99	105	107	120	143
GFL09	m	[kg]		154	156	162	165	177	201
GFL11	m	[kg]				271	273	285	307
GFL14	m	[kg]						462	483

			132C22	160C22	160C32	180C12	180C32	180C42	225C12	225C22
GFL06	m	[kg]	116							
GFL07	m	[kg]	150	193	208					
GFL09	m	[kg]	208	251	266	317	322	342		
GFL11	m	[kg]	314	357	372	423	428	448	648	668
GFL14	m	[kg]	490	533	548	599	604	624	821	841

GFL□□-2M VCK

			080C32	090C12	090C32	100C12	100C32	112C22	132C12
GFL04	m	[kg]	21	27	29				
GFL05	m	[kg]	36	42	44	50	52		
GFL06	m	[kg]	54	61	63	69	71	84	106
GFL07	m	[kg]	87	93	95	101	103	116	139
GFL09	m	[kg]		147	149	155	158	170	194
GFL11	m	[kg]				257	259	271	293
GFL14	m	[kg]						439	460

			132C22	160C22	160C32	180C12	180C32	180C42	225C12	225C22
GFL06	m	[kg]	113							
GFL07	m	[kg]	146	189	204					
GFL09	m	[kg]	201	244	259	310	315	335		
GFL11	m	[kg]	300	343	358	409	414	434	634	654
GFL14	m	[kg]	467	510	525	576	581	601	798	818

► Weights with oil filling for mounting position A; all values are approximate.
The weights relate to the basic version. Bear in mind that additional weights may be needed (e.g. for motor options).

GFL□□-2M SCR / SDR

			080C32	090C12	090C32	100C12	100C32	112C22	132C12
GFL04	m	[kg]	19	24	26				
GFL05	m	[kg]	32	38	40	46	48		
GFL06	m	[kg]	46	52	54	60	63	75	98
GFL07	m	[kg]	72	78	80	86	89	102	124
GFL09	m	[kg]		126	128	134	137	149	173
GFL11	m	[kg]				222	224	236	258
GFL14	m	[kg]						384	405

			132C22	160C22	160C32	180C12	180C32	180C42	225C12	225C22
GFL06	m	[kg]	105							
GFL07	m	[kg]	131	174	189					
GFL09	m	[kg]	180	223	238	289	294	314		
GFL11	m	[kg]	265	308	323	374	379	399	599	619
GFL14	m	[kg]	412	455	470	521	526	546	743	763

GFL□□-2M SAR / SBR

			080C32	090C12	090C32	100C12	100C32	112C22	132C12
GFL04	m	[kg]	22	28	30				
GFL05	m	[kg]	33	39	41	47	50		
GFL06	m	[kg]	48	55	57	63	65	78	100
GFL07	m	[kg]	76	82	84	90	93	106	128
GFL09	m	[kg]		133	135	141	144	156	180
GFL11	m	[kg]				236	238	250	272
GFL14	m	[kg]						407	428

			132C22	160C22	160C32	180C12	180C32	180C42	225C12	225C22
GFL06	m	[kg]	107							
GFL07	m	[kg]	135	178	193					
GFL09	m	[kg]	187	230	245	296	301	321		
GFL11	m	[kg]	279	322	337	388	393	413	613	633
GFL14	m	[kg]	435	478	493	544	549	569	766	786

► Weights with oil filling for mounting position A; all values are approximate.
The weights relate to the basic version. Bear in mind that additional weights may be needed (e.g. for motor options).

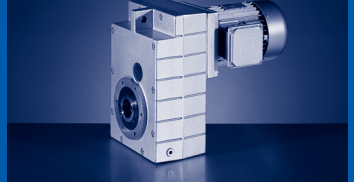

GFL□□-2M SAK

			080C32	090C12	090C32	100C12	100C32	112C22	132C12
GFL05	m	[kg]	37	43	45	51	54		
GFL06	m	[kg]	55	62	64	70	72	85	107
GFL07	m	[kg]	87	93	95	101	104	117	139
GFL09	m	[kg]		149	151	157	160	172	196
GFL11	m	[kg]				260	262	274	296
GFL14	m	[kg]						440	461

			132C22	160C22	160C32	180C12	180C32	180C42	225C12	225C22
GFL06	m	[kg]	114							
GFL07	m	[kg]	146	189	204					
GFL09	m	[kg]	203	246	261	312	317	337		
GFL11	m	[kg]	303	346	361	412	417	437	637	657
GFL14	m	[kg]	468	511	526	577	582	602	799	819

GFL□□-2M SCK

			080C32	090C12	090C32	100C12	100C32	112C22	132C12
GFL05	m	[kg]	36	42	44	50	52		
GFL06	m	[kg]	53	59	61	67	70	82	105
GFL07	m	[kg]	83	89	91	97	100	113	135
GFL09	m	[kg]		142	144	150	153	165	189
GFL11	m	[kg]				246	248	260	282
GFL14	m	[kg]						417	438

			132C22	160C22	160C32	180C12	180C32	180C42	225C12	225C22
GFL06	m	[kg]	112							
GFL07	m	[kg]	142	185	200					
GFL09	m	[kg]	196	239	254	305	310	330		
GFL11	m	[kg]	289	332	347	398	403	423	623	643
GFL14	m	[kg]	445	488	503	554	559	579	776	796

► Weights with oil filling for mounting position A; all values are approximate.
The weights relate to the basic version. Bear in mind that additional weights may be needed (e.g. for motor options).

GFL□□-3M HCR / HDR

			080C32	090C12	090C32	100C12	100C32
GFL06	m	[kg]	49	54			
GFL07	m	[kg]	79	85	87	93	
GFL09	m	[kg]	130	136	138	144	147
GFL11	m	[kg]	223	229	231	237	240
GFL14	m	[kg]		386	388	394	396

			112C22	132C12	132C22	160C22	160C32
GFL09	m	[kg]	160				
GFL11	m	[kg]	253	276	283		
GFL14	m	[kg]	409	432	439	482	497

GFL□□-3M HAR / HBR

			080C32	090C12	090C32	100C12	100C32
GFL06	m	[kg]	51	57			
GFL07	m	[kg]	83	89	91	97	
GFL09	m	[kg]	137	143	145	151	154
GFL11	m	[kg]	237	243	245	251	254
GFL14	m	[kg]		409	411	417	419

			112C22	132C12	132C22	160C22	160C32
GFL09	m	[kg]	167				
GFL11	m	[kg]	267	290	297		
GFL14	m	[kg]	432	455	462	505	520

- Weights with oil filling for mounting position A; all values are approximate.
  The weights relate to the basic version. Bear in mind that additional weights may be needed (e.g. for motor options).

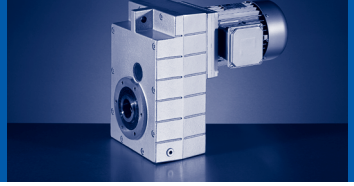

GFL□□-3M HAK

			080C32	090C12	090C32	100C12	100C32
GFL06	m	[kg]	58	64			
GFL07	m	[kg]	94	100	102	108	
GFL09	m	[kg]	153	159	161	167	170
GFL11	m	[kg]	261	267	269	275	278
GFL14	m	[kg]		442	444	450	452

			112C22	132C12	132C22	160C22	160C32
GFL09	m	[kg]	183				
GFL11	m	[kg]	291	314	321		
GFL14	m	[kg]	465	488	495	538	553

GFL□□-3M HCK

			080C32	090C12	090C32	100C12	100C32
GFL06	m	[kg]	56	61			
GFL07	m	[kg]	90	96	98	104	
GFL09	m	[kg]	146	152	154	160	163
GFL11	m	[kg]	247	253	255	261	264
GFL14	m	[kg]		419	421	427	429

			112C22	132C12	132C22	160C22	160C32
GFL09	m	[kg]	176				
GFL11	m	[kg]	277	300	307		
GFL14	m	[kg]	442	465	472	515	530

- Weights with oil filling for mounting position A; all values are approximate.
  The weights relate to the basic version. Bear in mind that additional weights may be needed (e.g. for motor options).

GFL□□-3M VCR / VDR

			080C32	090C12	090C32	100C12	100C32
GFL06	m	[kg]	51	57			
GFL07	m	[kg]	84	90	92	98	
GFL09	m	[kg]	138	144	146	152	155
GFL11	m	[kg]	239	245	247	253	256
GFL14	m	[kg]		419	421	427	429

			112C22	132C12	132C22	160C22	160C32
GFL09	m	[kg]	168				
GFL11	m	[kg]	269	292	299		
GFL14	m	[kg]	442	465	472	515	530

GFL□□-3M VAR / VBR

			080C32	090C12	090C32	100C12	100C32
GFL06	m	[kg]	54	59			
GFL07	m	[kg]	88	94	96	102	
GFL09	m	[kg]	145	151	153	159	162
GFL11	m	[kg]	253	259	261	267	270
GFL14	m	[kg]		442	444	450	452

			112C22	132C12	132C22	160C22	160C32
GFL09	m	[kg]	175				
GFL11	m	[kg]	283	306	313		
GFL14	m	[kg]	465	488	495	538	553

- Weights with oil filling for mounting position A; all values are approximate.
  The weights relate to the basic version. Bear in mind that additional weights may be needed (e.g. for motor options).

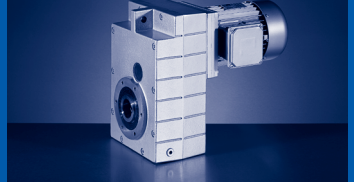

GFL□□-3M VAK

			080C32	090C12	090C32	100C12	100C32
GFL06	m	[kg]	61	66			
GFL07	m	[kg]	99	105	107	113	
GFL09	m	[kg]	161	167	169	175	178
GFL11	m	[kg]	277	283	285	291	294
GFL14	m	[kg]		475	477	483	485

			112C22	132C12	132C22	160C22	160C32
GFL09	m	[kg]	191				
GFL11	m	[kg]	307	330	337		
GFL14	m	[kg]	498	521	528	571	586

GFL□□-3M VCK

			080C32	090C12	090C32	100C12	100C32
GFL06	m	[kg]	58	64			
GFL07	m	[kg]	95	101	103	109	
GFL09	m	[kg]	154	160	162	168	171
GFL11	m	[kg]	263	269	271	277	280
GFL14	m	[kg]		452	454	460	462

			112C22	132C12	132C22	160C22	160C32
GFL09	m	[kg]	184				
GFL11	m	[kg]	293	316	323		
GFL14	m	[kg]	475	498	505	548	563

- Weights with oil filling for mounting position A; all values are approximate.
  The weights relate to the basic version. Bear in mind that additional weights may be needed (e.g. for motor options).

GFL□□-3M SCR / SDR

			080C32	090C12	090C32	100C12	100C32
GFL06	m	[kg]	50	55			
GFL07	m	[kg]	80	86	88	94	
GFL09	m	[kg]	133	139	141	147	150
GFL11	m	[kg]	228	234	236	242	245
GFL14	m	[kg]		397	399	405	407

			112C22	132C12	132C22	160C22	160C32
GFL09	m	[kg]	163				
GFL11	m	[kg]	258	281	288		
GFL14	m	[kg]	420	443	450	493	508

GFL□□-3M SAR / SBR

			080C32	090C12	090C32	100C12	100C32
GFL06	m	[kg]	52	58			
GFL07	m	[kg]	84	90	92	98	
GFL09	m	[kg]	140	146	148	154	157
GFL11	m	[kg]	242	248	250	256	259
GFL14	m	[kg]		420	422	428	430

			112C22	132C12	132C22	160C22	160C32
GFL09	m	[kg]	170				
GFL11	m	[kg]	272	295	302		
GFL14	m	[kg]	443	466	473	516	531

- Weights with oil filling for mounting position A; all values are approximate.
  The weights relate to the basic version. Bear in mind that additional weights may be needed (e.g. for motor options).

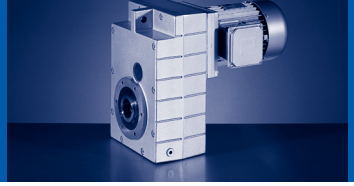

GFL□□-3M SAK

			080C32	090C12	090C32	100C12	100C32
GFL06	m	[kg]	59	65			
GFL07	m	[kg]	95	101	103	109	
GFL09	m	[kg]	156	162	164	170	173
GFL11	m	[kg]	266	272	274	280	283
GFL14	m	[kg]		453	455	461	463

			112C22	132C12	132C22	160C22	160C32
GFL09	m	[kg]	186				
GFL11	m	[kg]	296	319	326		
GFL14	m	[kg]	476	499	506	549	564

GFL□□-3M SCK

			080C32	090C12	090C32	100C12	100C32
GFL06	m	[kg]	57	62			
GFL07	m	[kg]	91	97	99	105	
GFL09	m	[kg]	149	155	157	163	166
GFL11	m	[kg]	252	258	260	266	269
GFL14	m	[kg]		430	432	438	440

			112C22	132C12	132C22	160C22	160C32
GFL09	m	[kg]	179				
GFL11	m	[kg]	282	305	312		
GFL14	m	[kg]	453	476	483	526	541

- Weights with oil filling for mounting position A; all values are approximate.
  The weights relate to the basic version. Bear in mind that additional weights may be needed (e.g. for motor options).

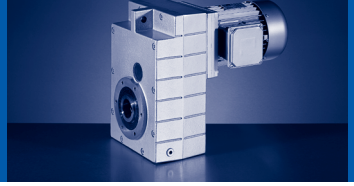

50 Hz: P_N=0.12 kW
60 Hz: P_N=0.145 kW
87 Hz: P_N=0.21 kW

n_N	1425 r/min		1725 r/min		2535 r/min		M_2 [Nm]	i		
f_N	50 Hz		60 Hz		87 Hz					
P_N	0.12 kW		0.145 kW		0.21 kW					
	n_2 [r/min]	c	n_2 [r/min]	c	n_2 [r/min]	c				
	203	5.4	246	5.1	361	4.5	6.0	7.025	GFL04-2M □□□063C12	406
	89	5.4	107	5.1	158	4.5	13	16.087	GFL04-2M □□□063C12	406
	80	5.4	96	5.1	142	4.5	14	17.920	GFL04-2M □□□063C12	406
	69	5.0	84	4.8	124	4.2	16	20.519	GFL04-2M □□□063C12	406
	62	5.0	76	4.8	111	4.2	18	22.857	GFL04-2M □□□063C12	406
	45	5.5	55	5.5	80	5.2	25	31.600	GFL04-2M □□□063C12	406
	41	5.5	49	5.5	72	5.2	28	35.200	GFL04-2M □□□063C12	406
	35	4.6	42	4.6	62	4.4	32	40.697	GFL04-2M □□□063C12	406
	31	4.6	38	4.6	56	4.4	35	45.333	GFL04-2M □□□063C12	406
	28	4.0	33	4.0	49	3.8	40	51.579	GFL04-2M □□□063C12	406
	25	3.9	30	3.9	44	3.7	45	57.455	GFL04-2M □□□063C12	406
	22	3.3	27	3.3	39	3.1	50	64.636	GFL04-2M □□□063C12	406
	20	3.2	24	3.2	35	3.2	56	72.000	GFL04-2M □□□063C12	406
	17	1.6	20	1.6	30	1.6	66	85.156	GFL04-2M □□□063C12	406
	15	1.6	18	1.6	27	1.6	74	94.857	GFL04-2M □□□063C12	406
	14	4.2	17	4.2	25	4.2	78	101.547	GFL05-3M □□□063C12	414
	12	3.7	15	3.7	22	3.7	88	114.952	GFL05-3M □□□063C12	414
	11	3.3	13	3.3	20	3.3	100	129.524	GFL05-3M □□□063C12	414
	9.9	5.1	12	5.1	18	5.1	111	144.320	GFL06-3M □□□063C12	414
	8.8	4.9	11	4.9	16	4.9	125	162.583	GFL06-3M □□□063C12	414
	8.1	2.5	9.7	2.5	14	2.5	136	177.027	GFL05-3M □□□063C12	414
	7.1	2.1	8.7	2.1	13	2.1	153	199.467	GFL05-3M □□□063C12	414
	6.3	2.0	7.6	2.0	11	2.0	175	227.989	GFL05-3M □□□063C12	414
	5.6	1.7	6.7	1.7	9.9	1.7	197	256.889	GFL05-3M □□□063C12	414
	5.5	3.1	6.6	3.1	9.7	3.1	200	260.457	GFL06-3M □□□063C12	414
	4.9	1.6	6	1.6	8.8	1.6	222	288.948	GFL05-3M □□□063C12	414
	4.9	2.9	5.9	2.9	8.7	2.9	225	293.018	GFL06-3M □□□063C12	414
	4.8	2.7	5.8	2.7	8.5	2.7	230	299.200	GFL06-3M □□□063C12	414
	4.4	1.3	5.3	1.3	7.8	1.3	250	325.576	GFL05-3M □□□063C12	414
	3.9	1.2	4.8	1.2	7	1.2	278	362.100	GFL05-3M □□□063C12	414
	3.9	2.3	4.7	2.3	6.9	2.3	282	367.200	GFL06-3M □□□063C12	414
	3.5	1.1	4.2	1.1	6.2	1.1	314	408.000	GFL05-3M □□□063C12	414
	3.4	1.9	4.2	1.9	6.1	1.9	318	413.667	GFL06-3M □□□063C12	414
	3	0.9	3.6	0.9	5.3	0.9	367	477.052	GFL05-3M □□□063C12	414
	3	1.8	3.6	1.8	5.3	1.8	365	475.200	GFL06-3M □□□063C12	414
	2.7	1.5	3.2	1.5	4.7	1.5	411	535.333	GFL06-3M □□□063C12	414
	2.5	1.4	3	1.4	4.4	1.4	443	576.720	GFL06-3M □□□063C12	414
	2.2	1.2	2.7	1.2	3.9	1.2	499	649.700	GFL06-3M □□□063C12	414
	1.9	0.9	2.3	0.9	3.3	0.9	584	759.806	GFL06-3M □□□063C12	414
	1.7	0.9	2	0.9	3	0.9	658	855.954	GFL06-3M □□□063C12	414

50 Hz: P_N=0.18 kW
60 Hz: P_N=0.22 kW

n_N	2740 r/min		3340 r/min				M_2 [Nm]	i		
f_N	50 Hz		60 Hz							
P_N	0.18 kW		0.22 kW							
	n_2 [r/min]	c	n_2 [r/min]	c						
	390	5.7	475	5.3			4.0	7.025	GFL04-2M □□□063C11	406
	170	5.7	208	5.3			10	16.087	GFL04-2M □□□063C11	406
	153	5.7	186	5.3			11	17.920	GFL04-2M □□□063C11	406
	134	5.3	163	4.9			13	20.519	GFL04-2M □□□063C11	406
	120	5.3	146	4.9			14	22.857	GFL04-2M □□□063C11	406
	67	5.5	82	5.1			25	40.697	GFL04-2M □□□063C11	406
	60	5.5	74	5.1			28	45.333	GFL04-2M □□□063C11	406
	53	4.8	65	4.5			31	51.579	GFL04-2M □□□063C11	406
	48	4.6	58	4.3			35	57.455	GFL04-2M □□□063C11	406
	42	3.9	52	3.6			39	64.636	GFL04-2M □□□063C11	406
	38	4.0	46	3.9			44	72.000	GFL04-2M □□□063C11	406
	32	2.0	39	1.9			52	85.156	GFL04-2M □□□063C11	406
	29	2.0	35	2.0			58	94.857	GFL04-2M □□□063C11	406
	27	5.4	33	5.2			61	101.547	GFL05-3M □□□063C11	414
	24	4.8	29	4.6			69	114.952	GFL05-3M □□□063C11	414
	21	4.2	26	4.1			78	129.524	GFL05-3M □□□063C11	414
	16	3.3	19	3.1			106	177.027	GFL05-3M □□□063C11	414
	14	2.7	17	2.7			120	199.467	GFL05-3M □□□063C11	414
	12	2.5	15	2.4			137	227.989	GFL05-3M □□□063C11	414
	11	2.1	13	2.1			154	256.889	GFL05-3M □□□063C11	414
	9.5	2.0	12	1.9			173	288.948	GFL05-3M □□□063C11	414
	8.4	1.7	10	1.6			195	325.576	GFL05-3M □□□063C11	414
	7.6	1.6	9.2	1.5			217	362.100	GFL05-3M □□□063C11	414
	7.5	3.0	9.1	2.9			220	367.200	GFL06-3M □□□063C11	414
	6.7	1.3	8.2	1.3			245	408.000	GFL05-3M □□□063C11	414
	6.6	2.5	8.1	2.4			248	413.667	GFL06-3M □□□063C11	414
	5.8	2.3	7	2.2			285	475.200	GFL06-3M □□□063C11	414
	5.7	1.2	7	1.2			286	477.052	GFL05-3M □□□063C11	414
	5.1	1.0	6.2	1.0			322	537.524	GFL05-3M □□□063C11	414
	5.1	1.9	6.2	1.8			321	535.333	GFL06-3M □□□063C11	414
	4.8	1.8	5.8	1.7			346	576.720	GFL06-3M □□□063C11	414
	4.2	1.6	5.1	1.5			390	649.700	GFL06-3M □□□063C11	414
	3.6	1.2	4.4	1.1			456	759.806	GFL06-3M □□□063C11	414
	3.2	1.1	3.9	1.1			513	855.954	GFL06-3M □□□063C11	414

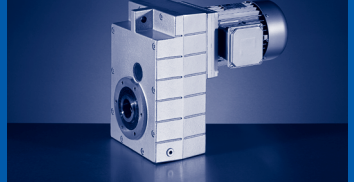

50 Hz: P_N=0.18 kW
60 Hz: P_N=0.22 kW
87 Hz: P_N=0.33 kW

n_N	1365 r/min		1665 r/min		2475 r/min		M_2 [Nm]	i		
f_N	50 Hz		60 Hz		87 Hz					
P_N	0.18 kW		0.22 kW		0.33 kW					
	n_2 [r/min]	c	n_2 [r/min]	c	n_2 [r/min]	c				
	194	3.4	237	3.3	352	2.9	9.0	7.025	GFL04-2M □□□063C32	406
	85	3.4	104	3.3	154	2.9	20	16.087	GFL04-2M □□□063C32	406
	76	3.4	93	3.3	138	2.9	22	17.920	GFL04-2M □□□063C32	406
	67	3.2	81	3.1	121	2.7	25	20.519	GFL04-2M □□□063C32	406
	60	3.2	73	3.1	108	2.7	28	22.857	GFL04-2M □□□063C32	406
	43	3.5	53	3.5	78	3.4	39	31.600	GFL04-2M □□□063C32	406
	39	3.5	47	3.5	70	3.4	43	35.200	GFL04-2M □□□063C32	406
	34	2.9	41	2.9	61	2.8	50	40.697	GFL04-2M □□□063C32	406
	30	2.9	37	2.9	55	2.8	55	45.333	GFL04-2M □□□063C32	406
	27	2.6	32	2.6	48	2.5	63	51.579	GFL04-2M □□□063C32	406
	24	2.5	29	2.5	43	2.4	70	57.455	GFL04-2M □□□063C32	406
	22	2.8	27	2.8	40	2.7	74	61.653	GFL05-3M □□□063C32	414
	21	2.1	26	2.1	38	2.0	79	64.636	GFL04-2M □□□063C32	406
	21	3.2	25	3.2	37	3.2	80	66.213	GFL06-3M □□□063C32	414
	19	2.0	23	2.0	34	2.0	88	72.000	GFL04-2M □□□063C32	406
	19	3.2	23	3.2	34	3.2	87	72.000	GFL06-3M □□□063C32	414
	17	2.4	21	2.4	32	2.4	95	78.639	GFL05-3M □□□063C32	414
	17	3.2	21	3.2	31	3.2	98	81.111	GFL06-3M □□□063C32	414
	16	1.0	20	1.0	29	1.0	104	85.156	GFL04-2M □□□063C32	406
	15	2.8	19	2.8	28	2.8	109	90.123	GFL05-3M □□□063C32	414
	14	1.0	18	1.0	26	1.0	116	94.857	GFL04-2M □□□063C32	406
	13	2.7	16	2.7	24	2.7	122	101.547	GFL05-3M □□□063C32	414
	12	2.4	15	2.4	22	2.4	138	114.952	GFL05-3M □□□063C32	414
	12	2.9	14	2.9	21	2.9	140	116.571	GFL06-3M □□□063C32	414
	11	2.1	13	2.1	19	2.1	156	129.524	GFL05-3M □□□063C32	414
	10	3.2	13	3.2	19	3.2	158	131.323	GFL06-3M □□□063C32	414
	9.5	3.2	12	3.2	17	3.2	174	144.320	GFL06-3M □□□063C32	414
	8.4	3.1	10	3.1	15	3.1	196	162.583	GFL06-3M □□□063C32	414
	7.7	1.6	9.4	1.6	14	1.6	213	177.027	GFL05-3M □□□063C32	414
	7.6	2.8	9.3	2.8	14	2.8	216	179.520	GFL06-3M □□□063C32	414
	6.8	1.4	8.4	1.4	12	1.4	240	199.467	GFL05-3M □□□063C32	414
	6.8	2.5	8.2	2.5	12	2.5	243	202.237	GFL06-3M □□□063C32	414
	6	1.3	7.3	1.3	11	1.3	274	227.989	GFL05-3M □□□063C32	414
	5.9	2.3	7.2	2.3	11	2.3	278	231.200	GFL06-3M □□□063C32	414
	5.3	1.1	6.5	1.1	9.6	1.1	309	256.889	GFL05-3M □□□063C32	414
	5.2	2.0	6.4	2.0	9.5	2.0	313	260.457	GFL06-3M □□□063C32	414
	4.7	1.0	5.8	1.0	8.6	1.0	348	288.948	GFL05-3M □□□063C32	414
	4.7	1.9	5.7	1.9	8.5	1.9	353	293.018	GFL06-3M □□□063C32	414
	4.6	1.7	5.6	1.7	8.3	1.7	360	299.200	GFL06-3M □□□063C32	414
	4.2	0.8	5.1	0.8	7.6	0.8	392	325.576	GFL05-3M □□□063C32	414
	3.7	1.5	4.5	1.5	6.7	1.5	442	367.200	GFL06-3M □□□063C32	414

50 Hz: P_N=0.18 kW
60 Hz: P_N=0.22 kW
87 Hz: P_N=0.33 kW

n_N	1365 r/min		1665 r/min		2475 r/min		M_2 [Nm]	i		
f_N	50 Hz		60 Hz		87 Hz					
P_N	0.18 kW		0.22 kW		0.33 kW					
	n_2 [r/min]	c	n_2 [r/min]	c	n_2 [r/min]	c				
	3.3	1.2	4	1.2	6	1.2	498	413.667	GFL06-3M □□□063C32	414
	2.9	1.2	3.5	1.2	5.2	1.2	572	475.200	GFL06-3M □□□063C32	414
	2.6	1.0	3.1	1.0	4.6	1.0	644	535.333	GFL06-3M □□□063C32	414
	2.4	0.9	2.9	0.9	4.3	0.9	694	576.720	GFL06-3M □□□063C32	414

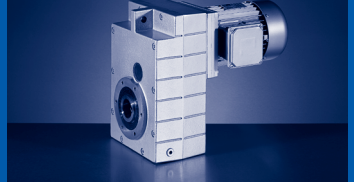

50 Hz: P_N=0.18 kW
60 Hz: P_N=0.22 kW

n_N	930 r/min		1130 r/min				M_2 [Nm]	i		
f_N	50 Hz		60 Hz							
P_N	0.18 kW		0.22 kW							
	n_2 [r/min]	c	n_2 [r/min]	c						
	254	5.4	309	5.4			7.0	3.659	GFL04-2M □□□071C13	406
	185	5.4	225	5.4			9.0	5.018	GFL04-2M □□□071C13	406
	159	5.4	194	5.4			11	5.833	GFL04-2M □□□071C13	406
	145	5.4	177	5.4			12	6.400	GFL05-2M □□□071C13	406
	111	5.4	135	5.4			15	8.379	GFL04-2M □□□071C13	406
	100	5.4	121	5.4			17	9.333	GFL04-2M □□□071C13	406
	81	5.4	98	5.4			21	11.491	GFL04-2M □□□071C13	406
	73	5.4	88	5.4			23	12.800	GFL04-2M □□□071C13	406
	59	5.4	71	5.4			29	15.904	GFL05-2M □□□071C13	406
	52	5.2	63	5.2			32	17.920	GFL04-2M □□□071C13	406
	45	5.0	55	5.0			37	20.519	GFL04-2M □□□071C13	406
	41	4.1	49	4.1			41	22.857	GFL04-2M □□□071C13	406
	37	4.1	45	4.1			45	25.136	GFL04-2M □□□071C13	406
	33	3.4	40	3.4			50	28.000	GFL04-2M □□□071C13	406
	29	3.3	36	3.3			57	31.600	GFL04-2M □□□071C13	406
	26	2.7	32	2.7			63	35.200	GFL04-2M □□□071C13	406
	23	2.6	28	2.6			73	40.697	GFL04-2M □□□071C13	406
	21	2.1	25	2.1			81	45.333	GFL04-2M □□□071C13	406
	18	2.1	22	2.1			93	51.579	GFL04-2M □□□071C13	406
	16	1.7	20	1.7			103	57.455	GFL04-2M □□□071C13	406
	16	3.1	19	3.1			105	58.667	GFL05-2M □□□071C13	406
	15	1.9	18	1.9			109	61.653	GFL05-3M □□□071C13	414
	15	2.5	18	2.5			113	63.190	GFL05-2M □□□071C13	406
	14	1.4	18	1.4			116	64.636	GFL04-2M □□□071C13	406
	13	1.4	16	1.4			129	72.000	GFL04-2M □□□071C13	406
	13	2.4	16	2.4			128	71.200	GFL05-2M □□□071C13	406
	12	1.6	14	1.6			139	78.639	GFL05-3M □□□071C13	414
	12	3.0	14	3.0			145	81.000	GFL06-2M □□□071C13	406
	11	3.1	13	3.1			156	88.200	GFL06-3M □□□071C13	414
	10	1.5	12	1.5			163	91.000	GFL05-2M □□□071C13	406
	10	1.9	13	1.9			159	90.123	GFL05-3M □□□071C13	414
	10	2.9	12	2.9			164	91.250	GFL06-2M □□□071C13	406
	9.4	3.1	11	3.1			176	99.361	GFL06-3M □□□071C13	414
	9.2	1.8	11	1.8			179	101.547	GFL05-3M □□□071C13	414
	8.1	1.6	9.8	1.6			203	114.952	GFL05-3M □□□071C13	414
	8	2.6	9.7	2.6			206	116.571	GFL06-3M □□□071C13	414
	7.2	1.4	8.7	1.4			229	129.524	GFL05-3M □□□071C13	414
	7.1	2.6	8.6	2.6			232	131.323	GFL06-3M □□□071C13	414
	6.6	1.4	8	1.4			249	140.817	GFL05-3M □□□071C13	414
	6.4	2.2	7.8	2.2			255	144.320	GFL06-3M □□□071C13	414
	5.9	1.2	7.1	1.2			280	158.667	GFL05-3M □□□071C13	414

50 Hz: P_N=0.18 kW
60 Hz: P_N=0.22 kW

n_N	930 r/min		1130 r/min				M_2 [Nm]	i		
f_N	50 Hz		60 Hz							
P_N	0.18 kW		0.22 kW							
	n_2 [r/min]	c	n_2 [r/min]	c						
	5.7	2.1	7	2.1			287	162.583	GFL06-3M □□□071C13	414
	5.3	1.1	6.4	1.1			313	177.027	GFL05-3M □□□071C13	414
	5.2	1.9	6.3	1.9			317	179.520	GFL06-3M □□□071C13	414
	4.7	0.9	5.7	0.9			352	199.467	GFL05-3M □□□071C13	414
	4.6	1.7	5.6	1.7			357	202.237	GFL06-3M □□□071C13	414
	4.1	0.9	5	0.9			403	227.989	GFL05-3M □□□071C13	414
	4	1.6	4.9	1.6			408	231.200	GFL06-3M □□□071C13	414
	3.7	2.8	4.5	2.8			447	253.111	GFL07-3M □□□071C13	414
	3.6	1.3	4.3	1.3			460	260.457	GFL06-3M □□□071C13	414
	3.2	1.3	3.9	1.3			518	293.018	GFL06-3M □□□071C13	414
	3.2	2.7	3.9	2.7			514	290.706	GFL07-3M □□□071C13	414
	3.1	1.2	3.8	1.2			529	299.200	GFL06-3M □□□071C13	414
	2.8	2.2	3.5	2.2			579	327.556	GFL07-3M □□□071C13	414
	2.6	2.2	3.2	2.2			623	352.811	GFL07-3M □□□071C13	414
	2.5	1.0	3.1	1.0			649	367.200	GFL06-3M □□□071C13	414
	2.3	0.8	2.7	0.8			731	413.667	GFL06-3M □□□071C13	414
	2.3	1.8	2.8	1.8			702	397.533	GFL07-3M □□□071C13	414
	2.2	1.7	2.6	1.7			760	430.222	GFL07-3M □□□071C13	414
	1.8	1.4	2.2	1.4			922	522.133	GFL07-3M □□□071C13	414
	1.8	3.0	2.2	3.0			909	514.881	GFL09-3M □□□071C13	414
	1.7	1.1	2	1.1			993	562.391	GFL07-3M □□□071C13	414
	1.7	2.2	2	2.2			979	554.470	GFL09-3M □□□071C13	414
	1.5	1.1	1.8	1.1			1119	633.680	GFL07-3M □□□071C13	414
	1.5	2.1	1.8	2.1			1104	624.879	GFL09-3M □□□071C13	414
	1.3	0.9	1.6	0.9			1270	718.786	GFL07-3M □□□071C13	414
	1.3	1.7	1.6	1.7			1238	700.875	GFL09-3M □□□071C13	414
	1.2	0.9	1.4	0.9			1431	809.900	GFL07-3M □□□071C13	414
	1.2	1.6	1.4	1.6			1395	789.875	GFL09-3M □□□071C13	414

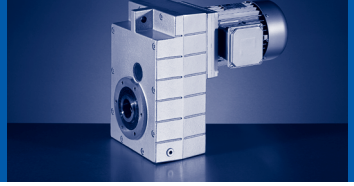

50 Hz: P_N=0.25 kW
60 Hz: P_N=0.31 kW

n_N	2710 r/min		3310 r/min				M_2 [Nm]	i		
f_N	50 Hz		60 Hz							
P_N	0.25 kW		0.31 kW							
	n_2 [r/min]	c	n_2 [r/min]	c						
	386	4.0	471	3.8			6.0	7.025	GFL04-2M □□□063C31	406
	169	4.0	206	3.8			14	16.087	GFL04-2M □□□063C31	406
	151	4.0	185	3.8			15	17.920	GFL04-2M □□□063C31	406
	132	3.8	161	3.5			18	20.519	GFL04-2M □□□063C31	406
	119	3.8	145	3.5			20	22.857	GFL04-2M □□□063C31	406
	86	4.7	105	4.4			27	31.600	GFL04-2M □□□063C31	406
	77	4.7	94	4.4			30	35.200	GFL04-2M □□□063C31	406
	67	3.9	81	3.7			35	40.697	GFL04-2M □□□063C31	406
	60	3.9	73	3.7			39	45.333	GFL04-2M □□□063C31	406
	53	3.4	64	3.2			44	51.579	GFL04-2M □□□063C31	406
	47	3.3	58	3.1			49	57.455	GFL04-2M □□□063C31	406
	42	2.8	51	2.6			55	64.636	GFL04-2M □□□063C31	406
	38	2.9	46	2.8			62	72.000	GFL04-2M □□□063C31	406
	32	1.4	39	1.4			73	85.156	GFL04-2M □□□063C31	406
	29	1.4	35	1.4			81	94.857	GFL04-2M □□□063C31	406
	27	3.8	33	3.7			86	101.547	GFL05-3M □□□063C31	414
	24	3.4	29	3.3			97	114.952	GFL05-3M □□□063C31	414
	21	3.0	26	2.9			109	129.524	GFL05-3M □□□063C31	414
	19	4.6	23	4.5			122	144.320	GFL06-3M □□□063C31	414
	17	4.5	20	4.3			137	162.583	GFL06-3M □□□063C31	414
	15	2.3	19	2.2			149	177.027	GFL05-3M □□□063C31	414
	14	2.0	17	1.9			168	199.467	GFL05-3M □□□063C31	414
	12	1.8	15	1.7			192	227.989	GFL05-3M □□□063C31	414
	11	1.5	13	1.5			216	256.889	GFL05-3M □□□063C31	414
	10	2.8	13	2.7			219	260.457	GFL06-3M □□□063C31	414
	9.4	1.4	12	1.4			243	288.948	GFL05-3M □□□063C31	414
	9.3	2.7	11	2.6			247	293.018	GFL06-3M □□□063C31	414
	9.1	2.4	11	2.4			252	299.200	GFL06-3M □□□063C31	414
	8.3	1.2	10	1.2			274	325.576	GFL05-3M □□□063C31	414
	7.5	1.1	9.1	1.1			305	362.100	GFL05-3M □□□063C31	414
	7.4	2.1	9	2.1			309	367.200	GFL06-3M □□□063C31	414
	6.6	1.0	8.1	0.9			344	408.000	GFL05-3M □□□063C31	414
	6.6	1.8	8	1.7			348	413.667	GFL06-3M □□□063C31	414
	5.7	0.9	6.9	0.8			402	477.052	GFL05-3M □□□063C31	414
	5.7	1.6	7	1.6			400	475.200	GFL06-3M □□□063C31	414
	5.1	1.4	6.2	1.3			451	535.333	GFL06-3M □□□063C31	414
	4.7	1.3	5.7	1.2			486	576.720	GFL06-3M □□□063C31	414
	4.2	1.1	5.1	1.1			547	649.700	GFL06-3M □□□063C31	414
	3.6	0.8					640	759.806	GFL06-3M □□□063C31	414

50 Hz: P_N=0.25 kW
60 Hz: P_N=0.31 kW
87 Hz: P_N=0.45 kW

n_N	1370 r/min		1670 r/min		2480 r/min		M_2 [Nm]	i		
f_N	50 Hz		60 Hz		87 Hz					
P_N	0.25 kW		0.31 kW		0.45 kW					
	n_2 [r/min]	c	n_2 [r/min]	c	n_2 [r/min]	c				
	374	4.6	456	4.4	678	3.9	6.0	3.659	GFL04-2M □□□063C42	406
	273	4.6	333	4.4	494	3.9	9.0	5.018	GFL04-2M □□□063C42	406
	235	4.6	286	4.4	425	3.9	10	5.833	GFL04-2M □□□063C42	406
	214	4.6	261	4.4	388	3.9	11	6.400	GFL05-2M □□□063C42	406
	195	5.2	238	5.0	353	4.4	12	7.025	GFL04-2M □□□063C42	406
	164	4.6	199	4.4	296	3.9	14	8.379	GFL04-2M □□□063C42	406
	147	4.6	179	4.4	266	3.9	16	9.333	GFL04-2M □□□063C42	406
	134	5.2	163	5.0	242	4.4	17	10.238	GFL04-2M □□□063C42	406
	119	4.6	145	4.4	216	3.9	19	11.491	GFL04-2M □□□063C42	406
	107	4.6	131	4.4	194	3.9	22	12.800	GFL04-2M □□□063C42	406
	93	5.2	114	5.0	169	4.4	25	14.706	GFL04-2M □□□063C42	406
	86	4.6	105	4.4	156	3.9	27	15.904	GFL05-2M □□□063C42	406
	77	4.6	93	4.4	138	3.9	30	17.920	GFL05-2M □□□063C42	406
	67	4.8	81	4.6	121	4.1	35	20.519	GFL04-2M □□□063C42	406
	60	4.3	73	4.2	109	3.7	39	22.857	GFL04-2M □□□063C42	406
	55	4.3	66	4.3	99	4.1	43	25.136	GFL04-2M □□□063C42	406
	49	3.6	60	3.6	89	3.4	47	28.000	GFL04-2M □□□063C42	406
	43	3.5	53	3.5	79	3.3	53	31.600	GFL04-2M □□□063C42	406
	39	2.9	47	2.9	71	2.7	60	35.200	GFL04-2M □□□063C42	406
	34	2.7	41	2.7	61	2.6	69	40.697	GFL04-2M □□□063C42	406
	30	2.2	37	2.2	55	2.2	77	45.333	GFL04-2M □□□063C42	406
	27	2.2	32	2.2	48	2.1	87	51.579	GFL04-2M □□□063C42	406
	24	1.8	29	1.8	43	1.7	97	57.455	GFL04-2M □□□063C42	406
	23	3.3	29	3.3	42	3.1	99	58.667	GFL05-2M □□□063C42	406
	22	2.0	27	2.0	40	1.9	103	61.653	GFL05-3M □□□063C42	414
	22	2.6	26	2.6	39	2.5	107	63.190	GFL05-2M □□□063C42	406
	21	1.2	26	1.2	38	1.2	109	64.636	GFL04-2M □□□063C42	406
	21	3.2	26	3.2	39	3.1	108	64.080	GFL06-2M □□□063C42	406
	19	1.2	23	1.2	34	1.2	122	72.000	GFL04-2M □□□063C42	406
	19	2.5	24	2.5	35	2.5	120	71.200	GFL05-2M □□□063C42	406
	19	3.2	23	3.2	34	3.2	122	72.189	GFL06-2M □□□063C42	406
	17	1.7	21	1.7	32	1.7	131	78.639	GFL05-3M □□□063C42	414
	17	2.6	21	2.6	31	2.6	137	81.000	GFL06-2M □□□063C42	406
	15	1.4	18	1.4	27	1.4	154	91.000	GFL05-2M □□□063C42	406
	15	2.0	19	2.0	28	2.0	150	90.123	GFL05-3M □□□063C42	414
	15	2.6	18	2.6	27	2.6	154	91.250	GFL06-2M □□□063C42	406
	14	1.9	16	1.9	24	1.9	169	101.547	GFL05-3M □□□063C42	414
	12	1.7	15	1.7	22	1.7	191	114.952	GFL05-3M □□□063C42	414
	12	2.7	14	2.7	21	2.7	194	116.571	GFL06-3M □□□063C42	414
	11	1.5	13	1.5	19	1.5	216	129.524	GFL05-3M □□□063C42	414
	10	2.7	13	2.7	19	2.7	219	131.323	GFL06-3M □□□063C42	414

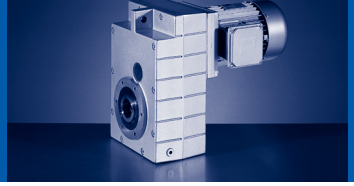

50 Hz: P_N=0.25 kW
60 Hz: P_N=0.31 kW
87 Hz: P_N=0.45 kW

n_N	1370 r/min		1670 r/min		2480 r/min		M_2 [Nm]	i		
f_N	50 Hz		60 Hz		87 Hz					
P_N	0.25 kW		0.31 kW		0.45 kW					
	n_2 [r/min]	c	n_2 [r/min]	c	n_2 [r/min]	c				
	9.7	1.5	12	1.5	18	1.5	235	140.817	GFL05-3M □□□063C42	414
	9.5	2.3	12	2.3	17	2.3	240	144.320	GFL06-3M □□□063C42	414
	8.6	1.2	11	1.2	16	1.2	264	158.667	GFL05-3M □□□063C42	414
	8.4	2.3	10	2.3	15	2.3	271	162.583	GFL06-3M □□□063C42	414
	7.7	1.2	9.4	1.2	14	1.2	295	177.027	GFL05-3M □□□063C42	414
	7.6	2.0	9.3	2.0	14	2.0	299	179.520	GFL06-3M □□□063C42	414
	6.9	1.0	8.4	1.0	12	1.0	332	199.467	GFL05-3M □□□063C42	414
	6.8	1.8	8.3	1.8	12	1.8	337	202.237	GFL06-3M □□□063C42	414
	6	0.9	7.3	0.9	11	0.9	380	227.989	GFL05-3M □□□063C42	414
	5.9	1.7	7.2	1.7	11	1.7	385	231.200	GFL06-3M □□□063C42	414
	5.4	3.0	6.6	3.0	9.8	3.0	422	253.111	GFL07-3M □□□063C42	414
	5.3	1.4	6.4	1.4	9.5	1.4	434	260.457	GFL06-3M □□□063C42	414
	4.7	1.4	5.7	1.4	8.5	1.4	488	293.018	GFL06-3M □□□063C42	414
	4.7	2.9	5.7	2.9	8.5	2.9	484	290.706	GFL07-3M □□□063C42	414
	4.6	1.2	5.6	1.2	8.3	1.2	498	299.200	GFL06-3M □□□063C42	414
	4.2	2.3	5.1	2.3	7.6	2.3	546	327.556	GFL07-3M □□□063C42	414
	3.9	2.4	4.7	2.4	7	2.4	588	352.811	GFL07-3M □□□063C42	414
	3.9	3.2	4.7	3.2	7	3.2	588	353.033	GFL09-3M □□□063C42	414
	3.7	1.1	4.6	1.1	6.8	1.1	612	367.200	GFL06-3M □□□063C42	414
	3.5	1.9	4.2	1.9	6.2	1.9	662	397.533	GFL07-3M □□□063C42	414
	3.4	3.2	4.2	3.2	6.2	3.2	663	397.863	GFL09-3M □□□063C42	414
	3.3	0.9	4	0.9	6	0.9	689	413.667	GFL06-3M □□□063C42	414
	3.2	1.8	3.9	1.8	5.8	1.8	717	430.222	GFL07-3M □□□063C42	414
	2.9	0.8	3.5	0.8	5.2	0.8	791	475.200	GFL06-3M □□□063C42	414
	2.7	3.2	3.2	3.2	4.8	3.2	857	514.881	GFL09-3M □□□063C42	414
	2.6	1.5	3.2	1.5	4.8	1.5	870	522.133	GFL07-3M □□□063C42	414
	2.5	2.3	3	2.3	4.5	2.3	923	554.470	GFL09-3M □□□063C42	414
	2.4	1.2	3	1.2	4.4	1.2	937	562.391	GFL07-3M □□□063C42	414
	2.2	1.2	2.6	1.2	3.9	1.2	1055	633.680	GFL07-3M □□□063C42	414
	2.2	2.2	2.7	2.2	4	2.2	1041	624.879	GFL09-3M □□□063C42	414
	2	1.8	2.4	1.8	3.5	1.8	1167	700.875	GFL09-3M □□□063C42	414
	1.9	0.9	2.3	0.9	3.5	0.9	1197	718.786	GFL07-3M □□□063C42	414
	1.7	0.9	2.1	0.9	3.1	0.9	1349	809.900	GFL07-3M □□□063C42	414
	1.7	1.7	2.1	1.7	3.1	1.7	1315	789.875	GFL09-3M □□□063C42	414

50 Hz: P_N=0.25 kW
60 Hz: P_N=0.3 kW

n_N	930 r/min		1130 r/min				M_2 [Nm]	i		
f_N	50 Hz		60 Hz							
P_N	0.25 kW		0.3 kW							
	n_2 [r/min]	c	n_2 [r/min]	c						
	254	3.9	309	3.9			9.0	3.659	GFL04-2M □□□071C33	406
	185	3.9	225	3.9			13	5.018	GFL04-2M □□□071C33	406
	159	3.9	194	3.9			15	5.833	GFL04-2M □□□071C33	406
	145	3.9	177	3.9			16	6.400	GFL05-2M □□□071C33	406
	132	4.4	161	4.4			18	7.025	GFL04-2M □□□071C33	406
	111	3.9	135	3.9			21	8.379	GFL04-2M □□□071C33	406
	100	3.9	121	3.9			23	9.333	GFL04-2M □□□071C33	406
	91	4.4	110	4.4			26	10.238	GFL04-2M □□□071C33	406
	81	3.9	98	3.9			29	11.491	GFL04-2M □□□071C33	406
	73	3.9	88	3.9			32	12.800	GFL04-2M □□□071C33	406
	63	4.4	77	4.4			37	14.706	GFL04-2M □□□071C33	406
	59	3.9	71	3.9			40	15.904	GFL05-2M □□□071C33	406
	52	3.7	63	3.7			45	17.920	GFL04-2M □□□071C33	406
	45	3.6	55	3.6			51	20.519	GFL04-2M □□□071C33	406
	41	2.9	49	2.9			57	22.857	GFL04-2M □□□071C33	406
	37	2.9	45	2.9			63	25.136	GFL04-2M □□□071C33	406
	33	2.4	40	2.4			70	28.000	GFL04-2M □□□071C33	406
	29	2.4	36	2.4			79	31.600	GFL04-2M □□□071C33	406
	26	1.9	32	1.9			88	35.200	GFL04-2M □□□071C33	406
	23	1.8	28	1.8			101	40.697	GFL04-2M □□□071C33	406
	23	3.1	28	3.1			100	40.233	GFL05-2M □□□071C33	406
	21	1.5	25	1.5			113	45.333	GFL04-2M □□□071C33	406
	21	2.8	25	2.8			113	45.333	GFL05-2M □□□071C33	406
	18	1.5	22	1.5			129	51.579	GFL04-2M □□□071C33	406
	18	2.4	22	2.4			130	52.067	GFL05-2M □□□071C33	406
	18	3.1	21	3.1			132	52.800	GFL06-2M □□□071C33	406
	16	1.2	20	1.2			143	57.455	GFL04-2M □□□071C33	406
	16	2.2	19	2.2			146	58.667	GFL05-2M □□□071C33	406
	16	3.1	19	3.1			148	59.481	GFL06-2M □□□071C33	406
	15	1.4	18	1.4			151	61.653	GFL05-3M □□□071C33	414
	15	1.8	18	1.8			157	63.190	GFL05-2M □□□071C33	406
	15	2.7	18	2.7			160	64.080	GFL06-2M □□□071C33	406
	14	1.0	18	1.0			161	64.636	GFL04-2M □□□071C33	406
	14	3.1	17	3.1			162	66.213	GFL06-3M □□□071C33	414
	13	1.0	16	1.0			179	72.000	GFL04-2M □□□071C33	406
	13	1.7	16	1.7			177	71.200	GFL05-2M □□□071C33	406
	13	2.7	16	2.7			180	72.189	GFL06-2M □□□071C33	406
	13	2.8	16	2.8			177	72.000	GFL06-3M □□□071C33	414
	12	1.2	14	1.2			193	78.639	GFL05-3M □□□071C33	414
	12	2.2	14	2.2			202	81.000	GFL06-2M □□□071C33	406
	12	2.5	14	2.5			199	81.111	GFL06-3M □□□071C33	414

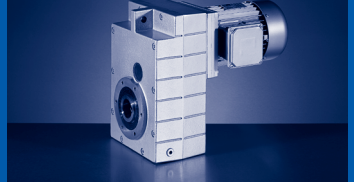

50 Hz: P_N=0.25 kW
60 Hz: P_N=0.3 kW

n_N	930 r/min		1130 r/min				M_2 [Nm]	i		
f_N	50 Hz		60 Hz							
P_N	0.25 kW		0.3 kW							
	n_2 [r/min]	c	n_2 [r/min]	c						
	11	2.3	13	2.3			216	88.200	GFL06-3M □□□071C33	414
	10	1.0	12	1.0			227	91.000	GFL05-2M □□□071C33	406
	10	1.4	13	1.4			221	90.123	GFL05-3M □□□071C33	414
	10	2.1	12	2.1			227	91.250	GFL06-2M □□□071C33	406
	9.4	2.3	11	2.3			244	99.361	GFL06-3M □□□071C33	414
	9.2	1.3	11	1.3			249	101.547	GFL05-3M □□□071C33	414
	8.1	1.2	9.8	1.2			282	114.952	GFL05-3M □□□071C33	414
	8	1.9	9.7	1.9			286	116.571	GFL06-3M □□□071C33	414
	7.2	1.0	8.7	1.0			318	129.524	GFL05-3M □□□071C33	414
	7.1	1.9	8.6	1.9			322	131.323	GFL06-3M □□□071C33	414
	6.6	1.0	8	1.0			346	140.817	GFL05-3M □□□071C33	414
	6.4	1.6	7.8	1.6			354	144.320	GFL06-3M □□□071C33	414
	6.3	3.2	7.7	3.2			362	147.347	GFL07-3M □□□071C33	414
	5.9	0.8	7.1	0.8			389	158.667	GFL05-3M □□□071C33	414
	5.7	1.5	7	1.5			399	162.583	GFL06-3M □□□071C33	414
	5.6	3.1	6.8	3.1			407	166.025	GFL07-3M □□□071C33	414
	5.2	1.4	6.3	1.4			440	179.520	GFL06-3M □□□071C33	414
	5.1	2.8	6.2	2.8			450	183.285	GFL07-3M □□□071C33	414
	4.6	1.2	5.6	1.2			496	202.237	GFL06-3M □□□071C33	414
	4.5	2.5	5.5	2.5			507	206.519	GFL07-3M □□□071C33	414
	4.1	2.4	5	2.4			551	224.636	GFL07-3M □□□071C33	414
	4	1.1	4.9	1.1			567	231.200	GFL06-3M □□□071C33	414
	3.7	2.0	4.5	2.0			621	253.111	GFL07-3M □□□071C33	414
	3.6	1.0	4.3	1.0			639	260.457	GFL06-3M □□□071C33	414
	3.2	0.9	3.9	0.9			719	293.018	GFL06-3M □□□071C33	414
	3.2	1.9	3.9	1.9			713	290.706	GFL07-3M □□□071C33	414
	3.2	3.1	3.9	3.1			714	290.889	GFL09-3M □□□071C33	414
	3.1	0.8	3.8	0.8			734	299.200	GFL06-3M □□□071C33	414
	2.8	1.6	3.5	1.6			804	327.556	GFL07-3M □□□071C33	414
	2.8	3.1	3.5	3.1			804	327.827	GFL09-3M □□□071C33	414
	2.6	1.6	3.2	1.6			866	352.811	GFL07-3M □□□071C33	414
	2.6	2.7	3.2	2.7			866	353.033	GFL09-3M □□□071C33	414
	2.3	1.3	2.8	1.3			975	397.533	GFL07-3M □□□071C33	414
	2.3	2.7	2.8	2.7			976	397.863	GFL09-3M □□□071C33	414
	2.2	1.2	2.6	1.2			1055	430.222	GFL07-3M □□□071C33	414
	2.2	2.6	2.7	2.6			1041	424.247	GFL09-3M □□□071C33	414
	1.8	1.0	2.2	1.0			1281	522.133	GFL07-3M □□□071C33	414
	1.8	2.2	2.2	2.2			1263	514.881	GFL09-3M □□□071C33	414
	1.7	0.8	2	0.8			1380	562.391	GFL07-3M □□□071C33	414
	1.7	1.6	2	1.6			1360	554.470	GFL09-3M □□□071C33	414
	1.5	1.5	1.8	1.5			1533	624.879	GFL09-3M □□□071C33	414

50 Hz: P_N=0.25 kW
60 Hz: P_N=0.3 kW

n_N	930 r/min		1130 r/min				M_2 [Nm]	i		
f_N	50 Hz		60 Hz							
P_N	0.25 kW		0.3 kW							
	n_2 [r/min]	c	n_2 [r/min]	c						
	1.3	1.2	1.6	1.2			1719	700.875	GFL09-3M □□□071C33	414
	1.2	1.2	1.4	1.2			1938	789.875	GFL09-3M □□□071C33	414

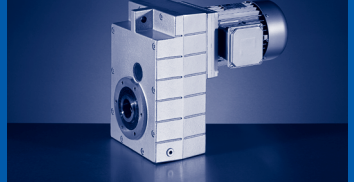

50 Hz: P_N=0.37 kW
60 Hz: P_N=0.45 kW

n_N	2720 r/min		3320 r/min				M_2 [Nm]	i		
f_N	50 Hz		60 Hz							
P_N	0.37 kW		0.45 kW							
	n_2 [r/min]	c	n_2 [r/min]	c						
	133	5.8	162	5.4			26	20.519	GFL04-2M □□□071C11	406
	119	4.8	145	4.5			29	22.857	GFL04-2M □□□071C11	406
	108	5.4	132	5.0			32	25.136	GFL04-2M □□□071C11	406
	97	4.4	119	4.2			35	28.000	GFL04-2M □□□071C11	406
	86	4.3	105	4.1			40	31.600	GFL04-2M □□□071C11	406
	77	3.6	94	3.3			44	35.200	GFL04-2M □□□071C11	406
	67	3.4	82	3.2			51	40.697	GFL04-2M □□□071C11	406
	60	2.8	73	2.6			57	45.333	GFL04-2M □□□071C11	406
	53	2.7	64	2.6			65	51.579	GFL04-2M □□□071C11	406
	47	2.2	58	2.1			72	57.455	GFL04-2M □□□071C11	406
	44	2.5	54	2.4			77	61.653	GFL05-3M □□□071C11	414
	42	1.9	51	1.8			82	64.636	GFL04-2M □□□071C11	406
	38	2.0	46	1.9			91	72.000	GFL04-2M □□□071C11	406
	35	2.3	42	2.2			98	78.639	GFL05-3M □□□071C11	414
	30	2.1	37	2.0			115	91.000	GFL05-2M □□□071C11	406
	30	2.7	37	2.6			112	90.123	GFL05-3M □□□071C11	414
	27	2.6	33	2.5			126	101.547	GFL05-3M □□□071C11	414
	24	2.3	29	2.2			143	114.952	GFL05-3M □□□071C11	414
	21	2.0	26	2.0			161	129.524	GFL05-3M □□□071C11	414
	19	2.0	24	1.9			175	140.817	GFL05-3M □□□071C11	414
	19	3.1	23	3.0			179	144.320	GFL06-3M □□□071C11	414
	17	1.7	21	1.6			197	158.667	GFL05-3M □□□071C11	414
	17	3.0	20	2.9			202	162.583	GFL06-3M □□□071C11	414
	15	1.6	19	1.5			220	177.027	GFL05-3M □□□071C11	414
	15	2.7	19	2.6			223	179.520	GFL06-3M □□□071C11	414
	14	1.3	17	1.3			248	199.467	GFL05-3M □□□071C11	414
	13	2.4	16	2.4			251	202.237	GFL06-3M □□□071C11	414
	12	1.2	15	1.2			283	227.989	GFL05-3M □□□071C11	414
	12	2.2	14	2.1			287	231.200	GFL06-3M □□□071C11	414
	11	1.0	13	1.0			319	256.889	GFL05-3M □□□071C11	414
	10	1.9	13	1.8			323	260.457	GFL06-3M □□□071C11	414
	9.4	1.0	12	0.9			359	288.948	GFL05-3M □□□071C11	414
	9.3	1.8	11	1.8			364	293.018	GFL06-3M □□□071C11	414
	9.1	1.7	11	1.6			371	299.200	GFL06-3M □□□071C11	414
	8.4	0.8					404	325.576	GFL05-3M □□□071C11	414
	8.3	3.1	10	3.0			407	327.556	GFL07-3M □□□071C11	414
	7.7	3.2	9.4	3.0			438	352.811	GFL07-3M □□□071C11	414
	7.4	1.4	9	1.4			456	367.200	GFL06-3M □□□071C11	414
	6.8	2.6	8.4	2.5			494	397.533	GFL07-3M □□□071C11	414
	6.6	1.2	8	1.2			514	413.667	GFL06-3M □□□071C11	414
	6.3	2.4	7.7	2.3			534	430.222	GFL07-3M □□□071C11	414

50 Hz: P_N=0.37 kW
60 Hz: P_N=0.45 kW

n_N	2720 r/min		3320 r/min				M_2 [Nm]	i		
f_N	50 Hz		60 Hz							
P_N	0.37 kW		0.45 kW							
	n_2 [r/min]	c	n_2 [r/min]	c						
	5.7	1.1	7	1.1			590	475.200	GFL06-3M □□□071C11	414
	5.2	2.0	6.4	1.9			648	522.133	GFL07-3M □□□071C11	414
	5.1	0.9	6.2	0.9			665	535.333	GFL06-3M □□□071C11	414
	4.9	3.1	6	3.0			688	554.470	GFL09-3M □□□071C11	414
	4.8	1.6	5.9	1.6			698	562.391	GFL07-3M □□□071C11	414
	4.7	0.9	5.8	0.8			716	576.720	GFL06-3M □□□071C11	414
	4.4	2.9	5.3	2.8			776	624.879	GFL09-3M □□□071C11	414
	4.3	1.6	5.2	1.5			787	633.680	GFL07-3M □□□071C11	414
	3.9	2.4	4.7	2.4			870	700.875	GFL09-3M □□□071C11	414
	3.8	1.3	4.6	1.2			892	718.786	GFL07-3M □□□071C11	414
	3.4	1.2	4.1	1.2			1005	809.900	GFL07-3M □□□071C11	414
	3.4	2.3	4.2	2.2			981	789.875	GFL09-3M □□□071C11	414

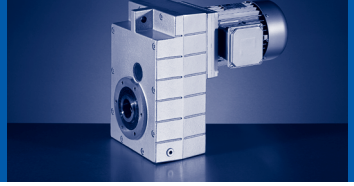

50 Hz: P_N=0.37 kW
60 Hz: P_N=0.45 kW
87 Hz: P_N=0.66 kW

n_N	1410 r/min		1710 r/min		2520 r/min		M_2 [Nm]	i		
f_N	50 Hz		60 Hz		87 Hz					
P_N	0.37 kW		0.45 kW		0.66 kW					
	n_2 [r/min]	c	n_2 [r/min]	c	n_2 [r/min]	c				
	385	4.0	467	3.8	689	3.3	9.0	3.659	GFL04-2M □□□071C32	406
	281	4.0	341	3.8	502	3.3	12	5.018	GFL04-2M □□□071C32	406
	242	4.0	293	3.8	432	3.3	14	5.833	GFL04-2M □□□071C32	406
	220	4.0	267	3.8	394	3.3	16	6.400	GFL05-2M □□□071C32	406
	201	4.5	243	4.3	359	3.8	17	7.025	GFL04-2M □□□071C32	406
	168	4.0	204	3.8	301	3.3	20	8.379	GFL04-2M □□□071C32	406
	151	4.0	183	3.8	270	3.3	23	9.333	GFL04-2M □□□071C32	406
	138	4.5	167	4.4	246	3.8	25	10.238	GFL04-2M □□□071C32	406
	123	4.0	149	3.8	219	3.3	28	11.491	GFL04-2M □□□071C32	406
	110	4.0	134	3.8	197	3.3	31	12.800	GFL04-2M □□□071C32	406
	96	4.5	116	4.4	171	3.8	36	14.706	GFL04-2M □□□071C32	406
	89	4.0	108	3.8	159	3.3	39	15.904	GFL05-2M □□□071C32	406
	79	3.8	95	3.7	141	3.2	44	17.920	GFL04-2M □□□071C32	406
	69	3.7	83	3.5	123	3.1	50	20.519	GFL04-2M □□□071C32	406
	62	3.0	75	2.9	110	2.5	56	22.857	GFL04-2M □□□071C32	406
	56	3.0	68	3.0	100	2.9	61	25.136	GFL04-2M □□□071C32	406
	50	2.5	61	2.5	90	2.4	68	28.000	GFL04-2M □□□071C32	406
	45	2.4	54	2.4	80	2.3	77	31.600	GFL04-2M □□□071C32	406
	40	2.0	49	2.0	72	1.9	86	35.200	GFL04-2M □□□071C32	406
	35	1.9	42	1.9	62	1.8	99	40.697	GFL04-2M □□□071C32	406
	35	3.2	43	3.2	63	3.0	98	40.233	GFL05-2M □□□071C32	406
	31	1.6	38	1.6	56	1.5	110	45.333	GFL04-2M □□□071C32	406
	31	2.9	38	2.9	56	2.8	110	45.333	GFL05-2M □□□071C32	406
	27	1.5	33	1.5	49	1.5	125	51.579	GFL04-2M □□□071C32	406
	27	2.4	33	2.4	48	2.3	127	52.067	GFL05-2M □□□071C32	406
	27	3.2	32	3.2	48	3.0	128	52.800	GFL06-2M □□□071C32	406
	25	1.3	30	1.3	44	1.2	140	57.455	GFL04-2M □□□071C32	406
	24	2.3	29	2.3	43	2.2	143	58.667	GFL05-2M □□□071C32	406
	24	3.2	29	3.2	42	3.0	145	59.481	GFL06-2M □□□071C32	406
	23	1.4	28	1.4	41	1.3	148	61.653	GFL05-3M □□□071C32	414
	22	1.0	27	1.0	39	1.0	157	64.636	GFL04-2M □□□071C32	406
	22	1.8	27	1.8	40	1.8	154	63.190	GFL05-2M □□□071C32	406
	22	2.8	27	2.8	39	2.7	156	64.080	GFL06-2M □□□071C32	406
	21	3.1	26	3.1	38	3.1	159	66.213	GFL06-3M □□□071C32	414
	20	1.0	24	1.0	35	1.0	175	72.000	GFL04-2M □□□071C32	406
	20	1.8	24	1.8	35	1.8	173	71.200	GFL05-2M □□□071C32	406
	20	2.8	24	2.8	35	2.8	176	72.189	GFL06-2M □□□071C32	406
	20	2.9	24	2.9	35	2.9	172	72.000	GFL06-3M □□□071C32	414
	18	1.2	22	1.2	32	1.2	188	78.639	GFL05-3M □□□071C32	414
	17	2.2	21	2.2	31	2.2	197	81.000	GFL06-2M □□□071C32	406
	17	2.6	21	2.6	31	2.6	194	81.111	GFL06-3M □□□071C32	414

50 Hz: P_N=0.37 kW
60 Hz: P_N=0.45 kW
87 Hz: P_N=0.66 kW

n_N	1410 r/min		1710 r/min		2520 r/min		M_2 [Nm]	i		
f_N	50 Hz		60 Hz		87 Hz					
P_N	0.37 kW		0.45 kW		0.66 kW					
	n_2 [r/min]	c	n_2 [r/min]	c	n_2 [r/min]	c				
	16	1.1	19	1.1	28	1.1	221	91.000	GFL05-2M □□□071C32	406
	16	1.4	19	1.4	28	1.4	216	90.123	GFL05-3M □□□071C32	414
	16	2.2	19	2.2	28	2.2	222	91.250	GFL06-2M □□□071C32	406
	16	2.3	19	2.3	29	2.3	211	88.200	GFL06-3M □□□071C32	414
	14	1.4	17	1.4	25	1.4	243	101.547	GFL05-3M □□□071C32	414
	14	2.3	17	2.3	25	2.3	238	99.361	GFL06-3M □□□071C32	414
	12	1.2	15	1.2	22	1.2	275	114.952	GFL05-3M □□□071C32	414
	12	1.9	15	1.9	22	1.9	279	116.571	GFL06-3M □□□071C32	414
	11	1.1	13	1.1	20	1.1	310	129.524	GFL05-3M □□□071C32	414
	11	1.9	13	1.9	19	1.9	315	131.323	GFL06-3M □□□071C32	414
	10	1.0	12	1.0	18	1.0	337	140.817	GFL05-3M □□□071C32	414
	9.8	1.6	12	1.6	18	1.6	346	144.320	GFL06-3M □□□071C32	414
	9.6	3.2	12	3.2	17	3.2	353	147.347	GFL07-3M □□□071C32	414
	8.9	0.9	11	0.9	16	0.9	380	158.667	GFL05-3M □□□071C32	414
	8.7	1.6	11	1.6	16	1.6	389	162.583	GFL06-3M □□□071C32	414
	8.5	3.1	10	3.1	15	3.1	398	166.025	GFL07-3M □□□071C32	414
	8	0.8	9.7	0.8	14	0.8	424	177.027	GFL05-3M □□□071C32	414
	7.9	1.4	9.5	1.4	14	1.4	430	179.520	GFL06-3M □□□071C32	414
	7.7	2.8	9.3	2.8	14	2.8	439	183.285	GFL07-3M □□□071C32	414
	7	1.3	8.5	1.3	13	1.3	484	202.237	GFL06-3M □□□071C32	414
	6.8	2.5	8.3	2.5	12	2.5	495	206.519	GFL07-3M □□□071C32	414
	6.3	2.5	7.6	2.5	11	2.5	538	224.636	GFL07-3M □□□071C32	414
	6.1	1.2	7.4	1.2	11	1.2	554	231.200	GFL06-3M □□□071C32	414
	5.6	2.1	6.8	2.1	10	2.1	606	253.111	GFL07-3M □□□071C32	414
	5.4	1.0	6.6	1.0	9.7	1.0	624	260.457	GFL06-3M □□□071C32	414
	4.9	2.0	5.9	2.0	8.7	2.0	696	290.706	GFL07-3M □□□071C32	414
	4.9	3.2	5.9	3.2	8.7	3.2	697	290.889	GFL09-3M □□□071C32	414
	4.8	0.9	5.8	0.9	8.6	0.9	702	293.018	GFL06-3M □□□071C32	414
	4.7	0.9	5.7	0.9	8.4	0.9	717	299.200	GFL06-3M □□□071C32	414
	4.3	1.6	5.2	1.6	7.7	1.6	784	327.556	GFL07-3M □□□071C32	414
	4.3	3.2	5.2	3.2	7.7	3.2	785	327.827	GFL09-3M □□□071C32	414
	4	1.6	4.9	1.6	7.1	1.6	845	352.811	GFL07-3M □□□071C32	414
	4	2.8	4.8	2.8	7.1	2.8	845	353.033	GFL09-3M □□□071C32	414
	3.6	1.3	4.3	1.3	6.3	1.3	952	397.533	GFL07-3M □□□071C32	414
	3.5	2.8	4.3	2.8	6.3	2.8	953	397.863	GFL09-3M □□□071C32	414
	3.3	1.2	4	1.2	5.9	1.2	1030	430.222	GFL07-3M □□□071C32	414
	3.3	2.7	4	2.7	5.9	2.7	1016	424.247	GFL09-3M □□□071C32	414
	2.7	1.0	3.3	1.0	4.8	1.0	1250	522.133	GFL07-3M □□□071C32	414
	2.7	2.2	3.3	2.2	4.9	2.2	1233	514.881	GFL09-3M □□□071C32	414
	2.5	0.8	3	0.8	4.5	0.8	1347	562.391	GFL07-3M □□□071C32	414
	2.5	1.6	3.1	1.6	4.5	1.6	1328	554.470	GFL09-3M □□□071C32	414

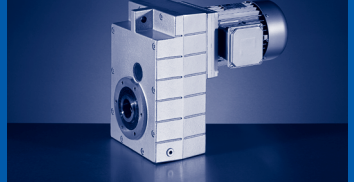

50 Hz: P_N=0.37 kW
60 Hz: P_N=0.45 kW
87 Hz: P_N=0.66 kW

n_N	1410 r/min		1710 r/min		2520 r/min		M_2 [Nm]	i		
f_N	50 Hz		60 Hz		87 Hz					
P_N	0.37 kW		0.45 kW		0.66 kW					
	n_2 [r/min]	c	n_2 [r/min]	c	n_2 [r/min]	c				
	2.3	1.5	2.7	1.5	4	1.5	1496	624.879	GFL09-3M □□□071C32	414
	2.2	0.8	2.7	0.8	4	0.8	1518	633.680	GFL07-3M □□□071C32	414
	2	1.3	2.4	1.3	3.6	1.3	1678	700.875	GFL09-3M □□□071C32	414
	1.8	1.2	2.2	1.2	3.2	1.2	1892	789.875	GFL09-3M □□□071C32	414

50 Hz: P_N=0.37 kW
60 Hz: P_N=0.45 kW

n_N	950 r/min		1150 r/min				M_2 [Nm]	i		
f_N	50 Hz		60 Hz							
P_N	0.37 kW		0.45 kW							
	n_2 [r/min]	c	n_2 [r/min]	c						
	260	5.7	314	5.7			13	3.659	GFL04-2M □□□080C13	406
	189	5.7	229	5.7			18	5.018	GFL04-2M □□□080C13	406
	163	5.7	197	5.7			21	5.833	GFL04-2M □□□080C13	406
	148	4.9	179	4.9			23	6.422	GFL04-2M □□□080C13	406
	135	4.5	164	4.5			25	7.025	GFL04-2M □□□080C13	406
	113	5.7	137	5.7			30	8.379	GFL04-2M □□□080C13	406
	102	4.9	123	4.9			34	9.333	GFL04-2M □□□080C13	406
	93	4.3	112	4.3			37	10.238	GFL04-2M □□□080C13	406
	83	4.4	100	4.4			42	11.491	GFL04-2M □□□080C13	406
	74	3.6	90	3.6			46	12.800	GFL04-2M □□□080C13	406
	65	3.4	78	3.4			53	14.706	GFL04-2M □□□080C13	406
	59	3.1	72	3.1			58	16.087	GFL04-2M □□□080C13	406
	53	2.6	64	2.6			65	17.920	GFL04-2M □□□080C13	406
	46	2.5	56	2.5			74	20.519	GFL04-2M □□□080C13	406
	42	2.0	50	2.0			83	22.857	GFL04-2M □□□080C13	406
	38	2.0	46	2.0			91	25.136	GFL04-2M □□□080C13	406
	34	1.7	41	1.7			101	28.000	GFL04-2M □□□080C13	406
	34	3.1	41	3.1			101	28.000	GFL05-2M □□□080C13	406
	30	1.6	36	1.6			114	31.600	GFL04-2M □□□080C13	406
	29	3.0	36	3.0			117	32.344	GFL05-2M □□□080C13	406
	27	1.3	33	1.3			127	35.200	GFL04-2M □□□080C13	406
	26	2.4	32	2.4			132	36.444	GFL05-2M □□□080C13	406
	24	2.4	29	2.4			145	40.233	GFL05-2M □□□080C13	406
	23	1.3	28	1.3			147	40.697	GFL04-2M □□□080C13	406
	21	1.1	25	1.1			164	45.333	GFL04-2M □□□080C13	406
	21	2.0	25	2.0			164	45.333	GFL05-2M □□□080C13	406
	18	1.7	22	1.7			188	52.067	GFL05-2M □□□080C13	406
	16	1.5	20	1.5			212	58.667	GFL05-2M □□□080C13	406
	16	2.9	19	2.9			215	59.481	GFL06-2M □□□080C13	406
	15	0.9	19	0.9			219	61.653	GFL05-3M □□□080C13	414
	15	1.2	18	1.2			228	63.190	GFL05-2M □□□080C13	406
	15	2.5	18	2.5			231	64.080	GFL06-2M □□□080C13	406
	14	2.1	17	2.1			235	66.213	GFL06-3M □□□080C13	414
	13	1.2	16	1.2			257	71.200	GFL05-2M □□□080C13	406
	13	1.9	16	1.9			256	72.000	GFL06-3M □□□080C13	414
	13	2.4	16	2.4			261	72.189	GFL06-2M □□□080C13	406
	12	0.8	15	0.8			280	78.639	GFL05-3M □□□080C13	414
	12	1.5	14	1.5			292	81.000	GFL06-2M □□□080C13	406
	12	1.7	14	1.7			288	81.111	GFL06-3M □□□080C13	414
	12	2.8	14	2.8			288	79.875	GFL07-2M □□□080C13	406
	11	0.9	13	0.9			320	90.123	GFL05-3M □□□080C13	414

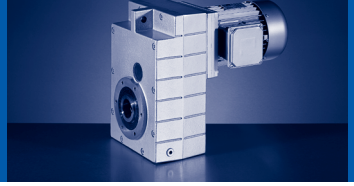

50 Hz: P_N=0.37 kW
60 Hz: P_N=0.45 kW

n_N	950 r/min		1150 r/min				M_2 [Nm]	i		
f_N	50 Hz		60 Hz							
P_N	0.37 kW		0.45 kW							
	n_2 [r/min]	c	n_2 [r/min]	c						
	11	1.6	13	1.6			314	88.200	GFL06-3M □□□080C13	414
	11	2.8	13	2.8			325	90.000	GFL07-2M □□□080C13	406
	10	1.5	13	1.5			329	91.250	GFL06-2M □□□080C13	406
	10	2.9	12	2.9			329	92.413	GFL07-3M □□□080C13	414
	9.6	1.6	12	1.6			353	99.361	GFL06-3M □□□080C13	414
	9.4	0.9	11	0.9			361	101.547	GFL05-3M □□□080C13	414
	9.1	2.9	11	2.9			370	104.127	GFL07-3M □□□080C13	414
	8.4	2.6	10	2.6			402	113.206	GFL07-3M □□□080C13	414
	8.3	0.8	10	0.8			409	114.952	GFL05-3M □□□080C13	414
	8.2	1.3	9.9	1.3			414	116.571	GFL06-3M □□□080C13	414
	7.5	2.6	9	2.6			453	127.556	GFL07-3M □□□080C13	414
	7.2	1.3	8.8	1.3			467	131.323	GFL06-3M □□□080C13	414
	6.6	1.1	8	1.1			513	144.320	GFL06-3M □□□080C13	414
	6.5	2.2	7.8	2.2			524	147.347	GFL07-3M □□□080C13	414
	5.8	1.1	7.1	1.1			578	162.583	GFL06-3M □□□080C13	414
	5.7	2.1	6.9	2.1			590	166.025	GFL07-3M □□□080C13	414
	5.3	1.0	6.4	1.0			638	179.520	GFL06-3M □□□080C13	414
	5.2	1.9	6.3	1.9			652	183.285	GFL07-3M □□□080C13	414
	4.7	0.9	5.7	0.9			719	202.237	GFL06-3M □□□080C13	414
	4.6	1.7	5.6	1.7			734	206.519	GFL07-3M □□□080C13	414
	4.2	1.7	5.1	1.7			798	224.636	GFL07-3M □□□080C13	414
	4.2	3.0	5.1	3.0			799	224.778	GFL09-3M □□□080C13	414
	3.8	1.4	4.5	1.4			900	253.111	GFL07-3M □□□080C13	414
	3.8	3.0	4.5	3.0			900	253.321	GFL09-3M □□□080C13	414
	3.3	1.3	4	1.3			1033	290.706	GFL07-3M □□□080C13	414
	3.3	2.6	4	2.6			1034	290.889	GFL09-3M □□□080C13	414
	2.9	1.1	3.5	1.1			1164	327.556	GFL07-3M □□□080C13	414
	2.9	2.6	3.5	2.6			1165	327.827	GFL09-3M □□□080C13	414
	2.7	1.1	3.3	1.1			1254	352.811	GFL07-3M □□□080C13	414
	2.7	2.2	3.3	2.2			1255	353.033	GFL09-3M □□□080C13	414
	2.4	0.9	2.9	0.9			1413	397.533	GFL07-3M □□□080C13	414
	2.4	2.2	2.9	2.2			1414	397.863	GFL09-3M □□□080C13	414
	2.2	0.8	2.7	0.8			1529	430.222	GFL07-3M □□□080C13	414
	2.2	1.8	2.7	1.8			1508	424.247	GFL09-3M □□□080C13	414
	1.9	1.5	2.2	1.5			1830	514.881	GFL09-3M □□□080C13	414
	1.8	3.2	2.2	3.2			1856	522.133	GFL11-3M □□□080C13	414
	1.7	1.1	2.1	1.1			1971	554.470	GFL09-3M □□□080C13	414
	1.7	2.7	2	2.7			1999	562.391	GFL11-3M □□□080C13	414
	1.5	1.0	1.8	1.0			2221	624.879	GFL09-3M □□□080C13	414
	1.5	2.6	1.8	2.6			2252	633.680	GFL11-3M □□□080C13	414
	1.4	0.9	1.6	0.9			2491	700.875	GFL09-3M □□□080C13	414

50 Hz: P_N=0.37 kW
60 Hz: P_N=0.45 kW

n_N	950 r/min		1150 r/min				M_2 [Nm]	i		
f_N	50 Hz		60 Hz							
P_N	0.37 kW		0.45 kW							
	n_2 [r/min]	c	n_2 [r/min]	c						
	1.2	0.8	1.5	0.8			2808	789.875	GFL09-3M □□□080C13	414
	1.2	2.1	1.4	2.1			2847	801.000	GFL11-3M □□□080C13	414

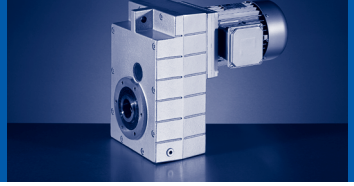

50 Hz: P_N=0.55 kW
60 Hz: P_N=0.68 kW

n_N	2630 r/min		3230 r/min				M_2 [Nm]	i		
f_N	50 Hz		60 Hz							
P_N	0.55 kW		0.68 kW							
	n_2 [r/min]	c	n_2 [r/min]	c						
	719	4.1	883	3.8			7.0	3.659	GFL04-2M □□□071C31	406
	524	4.1	644	3.8			10	5.018	GFL04-2M □□□071C31	406
	451	4.1	554	3.8			11	5.833	GFL04-2M □□□071C31	406
	411	4.1	505	3.8			12	6.400	GFL05-2M □□□071C31	406
	374	4.7	460	4.4			14	7.025	GFL04-2M □□□071C31	406
	314	4.1	386	3.8			16	8.379	GFL04-2M □□□071C31	406
	282	4.1	346	3.8			18	9.333	GFL04-2M □□□071C31	406
	257	4.7	316	4.4			20	10.238	GFL04-2M □□□071C31	406
	229	4.1	281	3.8			22	11.491	GFL04-2M □□□071C31	406
	206	4.1	252	3.8			25	12.800	GFL04-2M □□□071C31	406
	179	4.7	220	4.4			29	14.706	GFL04-2M □□□071C31	406
	165	4.1	203	3.8			31	15.904	GFL05-2M □□□071C31	406
	147	4.0	180	3.7			35	17.920	GFL04-2M □□□071C31	406
	128	3.8	157	3.6			40	20.519	GFL04-2M □□□071C31	406
	115	3.1	141	2.9			44	22.857	GFL04-2M □□□071C31	406
	105	3.5	129	3.3			49	25.136	GFL04-2M □□□071C31	406
	94	2.9	115	2.7			54	28.000	GFL04-2M □□□071C31	406
	83	2.9	102	2.7			61	31.600	GFL04-2M □□□071C31	406
	75	2.4	92	2.2			68	35.200	GFL04-2M □□□071C31	406
	65	2.2	79	2.1			79	40.697	GFL04-2M □□□071C31	406
	58	1.9	71	1.7			88	45.333	GFL04-2M □□□071C31	406
	51	1.8	63	1.7			100	51.579	GFL04-2M □□□071C31	406
	51	2.9	62	2.7			101	52.067	GFL05-2M □□□071C31	406
	46	1.5	56	1.4			111	57.455	GFL04-2M □□□071C31	406
	45	2.7	55	2.5			114	58.667	GFL05-2M □□□071C31	406
	43	1.7	52	1.6			118	61.653	GFL05-3M □□□071C31	414
	42	2.2	51	2.0			122	63.190	GFL05-2M □□□071C31	406
	41	1.2	50	1.2			125	64.636	GFL04-2M □□□071C31	406
	37	1.3	45	1.2			140	72.000	GFL04-2M □□□071C31	406
	37	2.2	45	2.2			138	71.200	GFL05-2M □□□071C31	406
	33	1.5	41	1.5			150	78.639	GFL05-3M □□□071C31	414
	33	2.8	40	2.7			157	81.000	GFL06-2M □□□071C31	406
	32	3.2	40	3.1			155	81.111	GFL06-3M □□□071C31	414
	30	2.9	37	2.8			168	88.200	GFL06-3M □□□071C31	414
	29	1.3	36	1.3			176	91.000	GFL05-2M □□□071C31	406
	29	1.8	36	1.7			172	90.123	GFL05-3M □□□071C31	414
	29	2.7	35	2.6			177	91.250	GFL06-2M □□□071C31	406
	27	2.9	33	2.8			190	99.361	GFL06-3M □□□071C31	414
	26	1.7	32	1.7			194	101.547	GFL05-3M □□□071C31	414
	23	1.5	28	1.5			219	114.952	GFL05-3M □□□071C31	414
	23	2.4	28	2.3			223	116.571	GFL06-3M □□□071C31	414

50 Hz: P_N=0.55 kW
60 Hz: P_N=0.68 kW

n_N	2630 r/min		3230 r/min				M_2 [Nm]	i		
f_N	50 Hz		60 Hz							
P_N	0.55 kW		0.68 kW							
	n_2 [r/min]	c	n_2 [r/min]	c						
	20	1.3	25	1.3			247	129.524	GFL05-3M □□□071C31	414
	20	2.4	25	2.3			251	131.323	GFL06-3M □□□071C31	414
	19	1.3	23	1.3			269	140.817	GFL05-3M □□□071C31	414
	18	2.0	22	2.0			275	144.320	GFL06-3M □□□071C31	414
	17	1.1	20	1.1			303	158.667	GFL05-3M □□□071C31	414
	16	2.0	20	1.9			310	162.583	GFL06-3M □□□071C31	414
	15	1.0	18	1.0			338	177.027	GFL05-3M □□□071C31	414
	15	1.8	18	1.7			343	179.520	GFL06-3M □□□071C31	414
	13	0.9	16	0.8			381	199.467	GFL05-3M □□□071C31	414
	13	1.6	16	1.5			386	202.237	GFL06-3M □□□071C31	414
	13	3.2	16	3.1			394	206.519	GFL07-3M □□□071C31	414
	12	3.1	14	3.1			429	224.636	GFL07-3M □□□071C31	414
	11	1.4	14	1.4			441	231.200	GFL06-3M □□□071C31	414
	10	1.2	12	1.2			497	260.457	GFL06-3M □□□071C31	414
	10	2.6	13	2.5			483	253.111	GFL07-3M □□□071C31	414
	9.1	2.5	11	2.4			555	290.706	GFL07-3M □□□071C31	414
	9	1.2	11	1.2			559	293.018	GFL06-3M □□□071C31	414
	8.8	1.1	11	1.1			571	299.200	GFL06-3M □□□071C31	414
	8	2.0	9.9	2.0			625	327.556	GFL07-3M □□□071C31	414
	7.5	2.1	9.2	2.0			673	352.811	GFL07-3M □□□071C31	414
	7.2	0.9	8.8	0.9			701	367.200	GFL06-3M □□□071C31	414
	6.6	1.7	8.1	1.6			759	397.533	GFL07-3M □□□071C31	414
	6.1	1.6	7.5	1.5			821	430.222	GFL07-3M □□□071C31	414
	5.1	2.8	6.3	2.7			983	514.881	GFL09-3M □□□071C31	414
	5	1.3	6.2	1.2			997	522.133	GFL07-3M □□□071C31	414
	4.7	1.1	5.7	1.0			1073	562.391	GFL07-3M □□□071C31	414
	4.7	2.0	5.8	2.0			1058	554.470	GFL09-3M □□□071C31	414
	4.2	1.0	5.1	1.0			1209	633.680	GFL07-3M □□□071C31	414
	4.2	1.9	5.2	1.9			1193	624.879	GFL09-3M □□□071C31	414
	3.8	1.6	4.6	1.5			1338	700.875	GFL09-3M □□□071C31	414
	3.7	0.8	4.5	0.8			1372	718.786	GFL07-3M □□□071C31	414
	3.3	1.5	4.1	1.5			1508	789.875	GFL09-3M □□□071C31	414

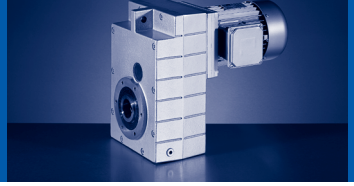

50 Hz: P_N=0.55 kW
60 Hz: P_N=0.68 kW
87 Hz: P_N=1.0 kW

n_N	1405 r/min		1705 r/min		2515 r/min		M_2 [Nm]	i		
f_N	50 Hz		60 Hz		87 Hz					
P_N	0.55 kW		0.68 kW		1.0 kW					
	n_2 [r/min]	c	n_2 [r/min]	c	n_2 [r/min]	c				
	384	4.5	466	4.3	687	3.8	13	3.659	GFL04-2M □□□071C42	406
	280	4.5	340	4.3	501	3.8	18	5.018	GFL04-2M □□□071C42	406
	241	4.5	292	4.3	431	3.8	21	5.833	GFL04-2M □□□071C42	406
	219	4.2	266	4.0	392	3.5	23	6.422	GFL04-2M □□□071C42	406
	200	4.2	243	4.0	358	3.5	26	7.025	GFL04-2M □□□071C42	406
	168	4.5	204	4.3	300	3.8	30	8.379	GFL04-2M □□□071C42	406
	156	4.5	189	4.3	279	3.8	33	9.010	GFL05-2M □□□071C42	406
	137	4.2	167	4.0	246	3.5	37	10.238	GFL04-2M □□□071C42	406
	122	4.3	148	4.2	219	3.7	42	11.491	GFL04-2M □□□071C42	406
	110	3.6	133	3.4	197	3.0	46	12.800	GFL04-2M □□□071C42	406
	96	3.4	116	3.3	171	2.9	53	14.706	GFL04-2M □□□071C42	406
	87	3.1	106	3.0	156	2.6	58	16.087	GFL04-2M □□□071C42	406
	78	2.6	95	2.5	140	2.2	65	17.920	GFL04-2M □□□071C42	406
	69	2.5	83	2.4	123	2.1	74	20.519	GFL04-2M □□□071C42	406
	62	2.0	75	1.9	110	1.7	83	22.857	GFL04-2M □□□071C42	406
	56	2.0	68	2.0	100	1.9	91	25.136	GFL04-2M □□□071C42	406
	50	1.7	61	1.7	90	1.6	102	28.000	GFL04-2M □□□071C42	406
	50	3.1	61	3.1	90	3.0	102	28.000	GFL05-2M □□□071C42	406
	45	1.6	54	1.6	80	1.5	115	31.600	GFL04-2M □□□071C42	406
	43	2.9	53	2.9	78	2.8	117	32.344	GFL05-2M □□□071C42	406
	40	1.3	48	1.3	71	1.3	128	35.200	GFL04-2M □□□071C42	406
	39	2.4	47	2.4	69	2.3	132	36.444	GFL05-2M □□□071C42	406
	35	1.3	42	1.3	62	1.2	148	40.697	GFL04-2M □□□071C42	406
	35	2.4	42	2.4	63	2.3	146	40.233	GFL05-2M □□□071C42	406
	34	3.2	42	3.2	62	3.0	148	40.800	GFL06-2M □□□071C42	406
	31	1.1	38	1.1	56	1.0	164	45.333	GFL04-2M □□□071C42	406
	31	1.9	38	1.9	56	1.9	164	45.333	GFL05-2M □□□071C42	406
	31	3.2	37	3.2	55	3.0	167	45.963	GFL06-2M □□□071C42	406
	27	1.6	33	1.6	48	1.6	189	52.067	GFL05-2M □□□071C42	406
	27	2.9	32	2.9	48	2.8	192	52.800	GFL06-2M □□□071C42	406
	24	1.5	29	1.5	43	1.5	213	58.667	GFL05-2M □□□071C42	406
	24	2.9	29	2.9	42	2.7	216	59.481	GFL06-2M □□□071C42	406
	23	0.9	28	0.9	41	0.9	220	61.653	GFL05-3M □□□071C42	414
	22	1.2	27	1.2	40	1.2	229	63.190	GFL05-2M □□□071C42	406
	22	2.4	27	2.4	39	2.3	232	64.080	GFL06-2M □□□071C42	406
	21	2.1	26	2.1	38	2.1	237	66.213	GFL06-3M □□□071C42	414
	20	1.2	24	1.2	35	1.2	258	71.200	GFL05-2M □□□071C42	406
	20	1.9	24	1.9	35	1.9	257	72.000	GFL06-3M □□□071C42	414
	20	2.4	24	2.4	35	2.4	262	72.189	GFL06-2M □□□071C42	406
	18	0.8	22	0.8	32	0.8	281	78.639	GFL05-3M □□□071C42	414
	17	1.4	21	1.4	31	1.4	294	81.000	GFL06-2M □□□071C42	406

50 Hz: P_N=0.55 kW
60 Hz: P_N=0.68 kW
87 Hz: P_N=1.0 kW

n_N	1405 r/min		1705 r/min		2515 r/min		M_2 [Nm]	i		
f_N	50 Hz		60 Hz		87 Hz					
P_N	0.55 kW		0.68 kW		1.0 kW					
	n_2 [r/min]	c	n_2 [r/min]	c	n_2 [r/min]	c				
	17	1.7	21	1.7	31	1.7	290	81.111	GFL06-3M □□□071C42	414
	16	0.9	19	0.9	28	0.9	322	90.123	GFL05-3M □□□071C42	414
	16	1.6	19	1.6	29	1.6	315	88.200	GFL06-3M □□□071C42	414
	15	1.4	19	1.4	28	1.4	331	91.250	GFL06-2M □□□071C42	406
	15	2.9	18	2.9	27	2.9	330	92.413	GFL07-3M □□□071C42	414
	14	0.9	17	0.9	25	0.9	363	101.547	GFL05-3M □□□071C42	414
	14	1.6	17	1.6	25	1.6	355	99.361	GFL06-3M □□□071C42	414
	14	2.9	16	2.9	24	2.9	372	104.127	GFL07-3M □□□071C42	414
	12	0.8	15	0.8	22	0.8	411	114.952	GFL05-3M □□□071C42	414
	12	1.3	15	1.3	22	1.3	416	116.571	GFL06-3M □□□071C42	414
	12	2.6	15	2.6	22	2.6	404	113.206	GFL07-3M □□□071C42	414
	11	1.3	13	1.3	19	1.3	469	131.323	GFL06-3M □□□071C42	414
	11	2.6	13	2.6	20	2.6	456	127.556	GFL07-3M □□□071C42	414
	9.7	1.1	12	1.1	17	1.1	516	144.320	GFL06-3M □□□071C42	414
	9.5	2.2	12	2.2	17	2.2	526	147.347	GFL07-3M □□□071C42	414
	8.6	1.1	11	1.1	16	1.1	581	162.583	GFL06-3M □□□071C42	414
	8.5	2.1	10	2.1	15	2.1	593	166.025	GFL07-3M □□□071C42	414
	7.8	0.9	9.5	0.9	14	0.9	641	179.520	GFL06-3M □□□071C42	414
	7.7	1.9	9.3	1.9	14	1.9	655	183.285	GFL07-3M □□□071C42	414
	7.6	3.2	9.2	3.2	14	3.2	661	185.111	GFL09-3M □□□071C42	414
	7	0.9	8.4	0.9	12	0.9	723	202.237	GFL06-3M □□□071C42	414
	6.8	1.7	8.3	1.7	12	1.7	738	206.519	GFL07-3M □□□071C42	414
	6.7	3.2	8.2	3.2	12	3.2	745	208.617	GFL09-3M □□□071C42	414
	6.3	1.7	7.6	1.7	11	1.7	803	224.636	GFL07-3M □□□071C42	414
	6.3	3.0	7.6	3.0	11	3.0	803	224.778	GFL09-3M □□□071C42	414
	5.6	1.4	6.7	1.4	9.9	1.4	904	253.111	GFL07-3M □□□071C42	414
	5.6	3.0	6.7	3.0	9.9	3.0	905	253.321	GFL09-3M □□□071C42	414
	4.8	1.3	5.9	1.3	8.7	1.3	1039	290.706	GFL07-3M □□□071C42	414
	4.8	2.5	5.9	2.5	8.7	2.5	1039	290.889	GFL09-3M □□□071C42	414
	4.3	1.1	5.2	1.1	7.7	1.1	1170	327.556	GFL07-3M □□□071C42	414
	4.3	2.5	5.2	2.5	7.7	2.5	1171	327.827	GFL09-3M □□□071C42	414
	4	1.1	4.8	1.1	7.1	1.1	1260	352.811	GFL07-3M □□□071C42	414
	4	2.2	4.8	2.2	7.1	2.2	1261	353.033	GFL09-3M □□□071C42	414
	3.5	0.9	4.3	0.9	6.3	0.9	1420	397.533	GFL07-3M □□□071C42	414
	3.5	2.2	4.3	2.2	6.3	2.2	1421	397.863	GFL09-3M □□□071C42	414
	3.3	0.8	4	0.8	5.9	0.8	1537	430.222	GFL07-3M □□□071C42	414
	3.3	1.8	4	1.8	5.9	1.8	1516	424.247	GFL09-3M □□□071C42	414
	2.7	1.5	3.3	1.5	4.9	1.5	1839	514.881	GFL09-3M □□□071C42	414
	2.5	1.1	3.1	1.1	4.5	1.1	1981	554.470	GFL09-3M □□□071C42	414
	2.3	1.0	2.7	1.0	4	1.0	2232	624.879	GFL09-3M □□□071C42	414
	2	0.8	2.4	0.8	3.6	0.8	2504	700.875	GFL09-3M □□□071C42	414

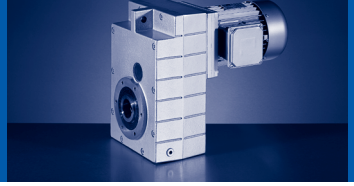

50 Hz: P_N=0.55 kW
60 Hz: P_N=0.68 kW
87 Hz: P_N=1.0 kW

n_N	1405 r/min		1705 r/min		2515 r/min		M_2 [Nm]	i		
f_N	50 Hz		60 Hz		87 Hz					
P_N	0.55 kW		0.68 kW		1.0 kW					
	n_2 [r/min]	c	n_2 [r/min]	c	n_2 [r/min]	c				
	1.8	0.8	2.2	0.8	3.2	0.8	2822	789.875	GFL09-3M □□□071C42	414

50 Hz: P_N=0.55 kW
60 Hz: P_N=0.66 kW

n_N	930 r/min		1130 r/min				M_2 [Nm]	i		
f_N	50 Hz		60 Hz							
P_N	0.55 kW		0.66 kW							
	n_2 [r/min]	c	n_2 [r/min]	c						
	254	3.7	309	3.7			20	3.659	GFL04-2M □□□080C33	406
	185	3.7	225	3.7			28	5.018	GFL04-2M □□□080C33	406
	159	3.7	194	3.7			32	5.833	GFL04-2M □□□080C33	406
	145	3.2	176	3.2			35	6.422	GFL04-2M □□□080C33	406
	132	2.9	161	2.9			39	7.025	GFL04-2M □□□080C33	406
	111	3.7	135	3.7			46	8.379	GFL04-2M □□□080C33	406
	100	3.2	121	3.2			51	9.333	GFL04-2M □□□080C33	406
	91	2.8	110	2.8			56	10.238	GFL04-2M □□□080C33	406
	81	2.9	98	2.9			63	11.491	GFL04-2M □□□080C33	406
	73	2.4	88	2.4			70	12.800	GFL04-2M □□□080C33	406
	63	2.3	77	2.3			81	14.706	GFL04-2M □□□080C33	406
	58	2.1	70	2.1			88	16.087	GFL04-2M □□□080C33	406
	52	1.7	63	1.7			98	17.920	GFL04-2M □□□080C33	406
	52	3.2	63	3.2			98	17.920	GFL05-2M □□□080C33	406
	46	3.0	56	3.0			111	20.286	GFL05-2M □□□080C33	406
	45	1.6	55	1.6			112	20.519	GFL04-2M □□□080C33	406
	41	1.3	49	1.3			125	22.857	GFL04-2M □□□080C33	406
	41	2.5	49	2.5			125	22.857	GFL05-2M □□□080C33	406
	37	1.3	45	1.3			138	25.136	GFL04-2M □□□080C33	406
	37	2.5	46	2.5			136	24.850	GFL05-2M □□□080C33	406
	33	1.1	40	1.1			153	28.000	GFL04-2M □□□080C33	406
	33	2.1	40	2.1			153	28.000	GFL05-2M □□□080C33	406
	29	1.1	36	1.1			173	31.600	GFL04-2M □□□080C33	406
	29	2.0	35	2.0			177	32.344	GFL05-2M □□□080C33	406
	28	3.1	35	3.1			180	32.800	GFL06-2M □□□080C33	406
	26	0.9	32	0.9			193	35.200	GFL04-2M □□□080C33	406
	26	1.6	31	1.6			200	36.444	GFL05-2M □□□080C33	406
	25	3.0	31	3.0			203	36.951	GFL06-2M □□□080C33	406
	23	0.8	28	0.8			223	40.697	GFL04-2M □□□080C33	406
	23	1.6	28	1.6			220	40.233	GFL05-2M □□□080C33	406
	23	2.6	28	2.6			224	40.800	GFL06-2M □□□080C33	406
	21	1.3	25	1.3			248	45.333	GFL05-2M □□□080C33	406
	20	2.4	25	2.4			252	45.963	GFL06-2M □□□080C33	406
	18	1.1	22	1.1			285	52.067	GFL05-2M □□□080C33	406
	18	2.3	21	2.3			289	52.800	GFL06-2M □□□080C33	406
	18	2.6	22	2.6			285	52.067	GFL07-2M □□□080C33	406
	16	1.0	19	1.0			322	58.667	GFL05-2M □□□080C33	406
	16	1.9	19	1.9			326	59.481	GFL06-2M □□□080C33	406
	16	2.6	19	2.6			322	58.667	GFL07-2M □□□080C33	406
	15	0.8	18	0.8			346	63.190	GFL05-2M □□□080C33	406
	15	1.6	18	1.6			351	64.080	GFL06-2M □□□080C33	406

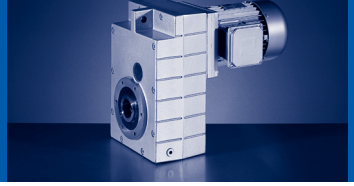

50 Hz: P_N=0.55 kW
60 Hz: P_N=0.66 kW

n_N	930 r/min		1130 r/min				M_2 [Nm]	i		
f_N	50 Hz		60 Hz							
P_N	0.55 kW		0.66 kW							
	n_2 [r/min]	c	n_2 [r/min]	c						
	15	2.3	18	2.3			346	63.190	GFL07-2M □□□080C33	406
	14	1.4	17	1.4			357	66.213	GFL06-3M □□□080C33	414
	14	2.5	17	2.5			353	65.306	GFL07-3M □□□080C33	414
	13	1.3	16	1.3			389	72.000	GFL06-3M □□□080C33	414
	13	1.6	16	1.6			396	72.189	GFL06-2M □□□080C33	406
	13	2.2	16	2.2			391	72.452	GFL07-3M □□□080C33	414
	13	2.3	16	2.3			390	71.200	GFL07-2M □□□080C33	406
	12	1.0	14	1.0			444	81.000	GFL06-2M □□□080C33	406
	12	1.1	14	1.1			438	81.111	GFL06-3M □□□080C33	414
	12	1.8	14	1.8			438	79.875	GFL07-2M □□□080C33	406
	11	1.0	13	1.0			476	88.200	GFL06-3M □□□080C33	414
	11	2.2	14	2.2			441	81.636	GFL07-3M □□□080C33	414
	10	1.0	12	1.0			500	91.250	GFL06-2M □□□080C33	406
	10	1.8	13	1.8			493	90.000	GFL07-2M □□□080C33	406
	10	1.9	12	1.9			499	92.413	GFL07-3M □□□080C33	414
	9.4	1.0	11	1.0			536	99.361	GFL06-3M □□□080C33	414
	8.9	1.9	11	1.9			562	104.127	GFL07-3M □□□080C33	414
	8.2	1.7	10	1.7			611	113.206	GFL07-3M □□□080C33	414
	8	0.8	9.7	0.8			629	116.571	GFL06-3M □□□080C33	414
	7.3	1.7	8.9	1.7			688	127.556	GFL07-3M □□□080C33	414
	7.1	0.8	8.6	0.8			709	131.323	GFL06-3M □□□080C33	414
	6.3	1.4	7.7	1.4			795	147.347	GFL07-3M □□□080C33	414
	6.3	2.6	7.6	2.6			803	148.815	GFL09-3M □□□080C33	414
	5.6	1.4	6.8	1.4			896	166.025	GFL07-3M □□□080C33	414
	5.6	2.6	6.7	2.6			905	167.712	GFL09-3M □□□080C33	414
	5.1	1.3	6.2	1.3			989	183.285	GFL07-3M □□□080C33	414
	5	2.2	6.1	2.2			999	185.111	GFL09-3M □□□080C33	414
	4.5	1.1	5.5	1.1			1115	206.519	GFL07-3M □□□080C33	414
	4.5	2.2	5.4	2.2			1126	208.617	GFL09-3M □□□080C33	414
	4.1	1.1	5	1.1			1212	224.636	GFL07-3M □□□080C33	414
	4.1	2.0	5	2.0			1213	224.778	GFL09-3M □□□080C33	414
	3.7	0.9	4.5	0.9			1366	253.111	GFL07-3M □□□080C33	414
	3.7	2.0	4.5	2.0			1367	253.321	GFL09-3M □□□080C33	414
	3.2	0.9	3.9	0.9			1569	290.706	GFL07-3M □□□080C33	414
	3.2	1.7	3.9	1.7			1570	290.889	GFL09-3M □□□080C33	414
	2.8	1.7	3.5	1.7			1769	327.827	GFL09-3M □□□080C33	414
	2.6	1.5	3.2	1.5			1905	353.033	GFL09-3M □□□080C33	414
	2.6	2.3	3.2	2.3			1933	358.077	GFL11-3M □□□080C33	414
	2.3	1.5	2.8	1.5			2147	397.863	GFL09-3M □□□080C33	414
	2.3	2.3	2.8	2.3			2178	403.467	GFL11-3M □□□080C33	414
	2.2	1.2	2.7	1.2			2290	424.247	GFL09-3M □□□080C33	414

50 Hz: P_N=0.55 kW
60 Hz: P_N=0.66 kW

n_N	930 r/min		1130 r/min				M_2 [Nm]	i		
f_N	50 Hz		60 Hz							
P_N	0.55 kW		0.66 kW							
	n_2 [r/min]	c	n_2 [r/min]	c						
	2.2	2.6	2.6	2.6			2322	430.222	GFL11-3M □□□080C33	414
	1.8	1.0	2.2	1.0			2779	514.881	GFL09-3M □□□080C33	414
	1.8	2.1	2.2	2.1			2818	522.133	GFL11-3M □□□080C33	414
	1.7	1.8	2	1.8			3035	562.391	GFL11-3M □□□080C33	414
	1.5	1.7	1.8	1.7			3420	633.680	GFL11-3M □□□080C33	414
	1.2	1.4	1.4	1.4			4323	801.000	GFL11-3M □□□080C33	414

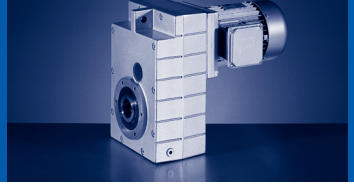

50 Hz: P_N=0.75 kW
60 Hz: P_N=0.92 kW

n_N	2720 r/min		3320 r/min				M_2 [Nm]	i		
f_N	50 Hz		60 Hz							
P_N	0.75 kW		0.92 kW							
	n_2 [r/min]	c	n_2 [r/min]	c						
	424	5.6	517	5.3			16	6.422	GFL04-2M □□□080C11	406
	387	5.2	473	4.8			18	7.025	GFL04-2M □□□080C11	406
	291	5.7	356	5.3			24	9.333	GFL04-2M □□□080C11	406
	266	5.0	324	4.7			26	10.238	GFL04-2M □□□080C11	406
	237	5.1	289	4.7			29	11.491	GFL04-2M □□□080C11	406
	213	4.2	259	3.9			33	12.800	GFL04-2M □□□080C11	406
	185	4.0	226	3.7			38	14.706	GFL04-2M □□□080C11	406
	169	3.6	206	3.4			41	16.087	GFL04-2M □□□080C11	406
	152	3.0	185	2.8			46	17.920	GFL04-2M □□□080C11	406
	133	2.9	162	2.7			52	20.519	GFL04-2M □□□080C11	406
	119	2.4	145	2.2			58	22.857	GFL04-2M □□□080C11	406
	108	2.7	132	2.5			64	25.136	GFL04-2M □□□080C11	406
	97	2.2	119	2.1			72	28.000	GFL04-2M □□□080C11	406
	86	2.1	105	2.0			81	31.600	GFL04-2M □□□080C11	406
	77	1.8	94	1.7			90	35.200	GFL04-2M □□□080C11	406
	75	3.2	91	3.0			93	36.444	GFL05-2M □□□080C11	406
	68	3.1	83	2.9			103	40.233	GFL05-2M □□□080C11	406
	67	1.7	82	1.6			104	40.697	GFL04-2M □□□080C11	406
	60	1.4	73	1.3			116	45.333	GFL04-2M □□□080C11	406
	60	2.6	73	2.4			116	45.333	GFL05-2M □□□080C11	406
	52	2.2	64	2.0			133	52.067	GFL05-2M □□□080C11	406
	46	2.0	57	1.9			150	58.667	GFL05-2M □□□080C11	406
	44	1.2	54	1.2			155	61.653	GFL05-3M □□□080C11	414
	43	1.6	53	1.5			161	63.190	GFL05-2M □□□080C11	406
	41	3.0	50	2.9			167	66.213	GFL06-3M □□□080C11	414
	38	1.7	47	1.6			182	71.200	GFL05-2M □□□080C11	406
	38	2.7	46	2.7			181	72.000	GFL06-3M □□□080C11	414
	35	1.1	42	1.1			198	78.639	GFL05-3M □□□080C11	414
	34	2.1	41	2.0			207	81.000	GFL06-2M □□□080C11	406
	34	2.4	41	2.4			204	81.111	GFL06-3M □□□080C11	414
	31	2.2	38	2.1			222	88.200	GFL06-3M □□□080C11	414
	30	1.3	37	1.3			227	90.123	GFL05-3M □□□080C11	414
	30	2.0	36	2.0			233	91.250	GFL06-2M □□□080C11	406
	27	1.3	33	1.2			256	101.547	GFL05-3M □□□080C11	414
	27	2.2	33	2.1			250	99.361	GFL06-3M □□□080C11	414
	24	1.1	29	1.1			289	114.952	GFL05-3M □□□080C11	414
	23	1.8	29	1.7			293	116.571	GFL06-3M □□□080C11	414
	21	1.0	26	1.0			326	129.524	GFL05-3M □□□080C11	414
	21	1.8	25	1.7			331	131.323	GFL06-3M □□□080C11	414
	19	1.0	24	0.9			354	140.817	GFL05-3M □□□080C11	414
	19	1.5	23	1.5			363	144.320	GFL06-3M □□□080C11	414

50 Hz: P_N=0.75 kW
60 Hz: P_N=0.92 kW

n_N	2720 r/min		3320 r/min				M_2 [Nm]	i		
f_N	50 Hz		60 Hz							
P_N	0.75 kW		0.92 kW							
	n_2 [r/min]	c	n_2 [r/min]	c						
	19	3.1	23	3.0			371	147.347	GFL07-3M □□□080C11	414
	17	0.8					399	158.667	GFL05-3M □□□080C11	414
	17	1.5	20	1.5			409	162.583	GFL06-3M □□□080C11	414
	16	3.0	20	2.9			418	166.025	GFL07-3M □□□080C11	414
	15	1.3	19	1.3			452	179.520	GFL06-3M □□□080C11	414
	15	2.7	18	2.6			461	183.285	GFL07-3M □□□080C11	414
	13	1.2	16	1.2			509	202.237	GFL06-3M □□□080C11	414
	13	2.4	16	2.3			520	206.519	GFL07-3M □□□080C11	414
	12	1.1	14	1.1			582	231.200	GFL06-3M □□□080C11	414
	12	2.4	15	2.3			565	224.636	GFL07-3M □□□080C11	414
	11	2.0	13	1.9			637	253.111	GFL07-3M □□□080C11	414
	10	0.9	13	0.9			655	260.457	GFL06-3M □□□080C11	414
	9.4	1.9	11	1.8			732	290.706	GFL07-3M □□□080C11	414
	9.1	0.8					753	299.200	GFL06-3M □□□080C11	414
	8.3	1.5	10	1.5			824	327.556	GFL07-3M □□□080C11	414
	7.7	1.6	9.4	1.5			888	352.811	GFL07-3M □□□080C11	414
	7.7	3.2	9.4	3.1			888	353.033	GFL09-3M □□□080C11	414
	6.8	1.3	8.4	1.2			1000	397.533	GFL07-3M □□□080C11	414
	6.8	3.2	8.3	3.1			1001	397.863	GFL09-3M □□□080C11	414
	6.4	2.6	7.8	2.5			1068	424.247	GFL09-3M □□□080C11	414
	6.3	1.2	7.7	1.1			1083	430.222	GFL07-3M □□□080C11	414
	5.3	2.1	6.5	2.0			1296	514.881	GFL09-3M □□□080C11	414
	5.2	1.0	6.4	0.9			1314	522.133	GFL07-3M □□□080C11	414
	4.9	1.5	6	1.5			1395	554.470	GFL09-3M □□□080C11	414
	4.4	1.5	5.3	1.4			1572	624.879	GFL09-3M □□□080C11	414
	3.9	1.2	4.7	1.2			1764	700.875	GFL09-3M □□□080C11	414
	3.4	1.1	4.2	1.1			1988	789.875	GFL09-3M □□□080C11	414
	3.4	2.9	4.1	2.8			2016	801.000	GFL11-3M □□□080C11	414

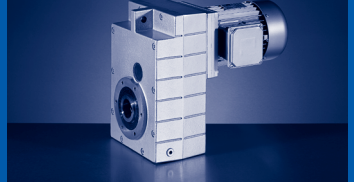

50 Hz: P_N=0.75 kW
60 Hz: P_N=0.92 kW
87 Hz: P_N=1.35 kW

n_N	1410 r/min		1710 r/min		2520 r/min		M_2 [Nm]	i		
f_N	50 Hz		60 Hz		87 Hz					
P_N	0.75 kW		0.92 kW		1.35 kW					
	n_2 [r/min]	c	n_2 [r/min]	c	n_2 [r/min]	c				
	385	4.2	467	4.0	689	3.5	18	3.659	GFL04-2M □□□080C32	406
	281	4.2	341	4.0	502	3.5	25	5.018	GFL04-2M □□□080C32	406
	242	4.2	293	4.0	432	3.5	29	5.833	GFL04-2M □□□080C32	406
	220	3.6	266	3.4	392	3.0	32	6.422	GFL04-2M □□□080C32	406
	201	3.3	243	3.1	359	2.7	35	7.025	GFL04-2M □□□080C32	406
	168	4.2	204	4.0	301	3.5	41	8.379	GFL04-2M □□□080C32	406
	151	3.6	183	3.4	270	3.0	46	9.333	GFL04-2M □□□080C32	406
	138	3.2	167	3.0	246	2.7	51	10.238	GFL04-2M □□□080C32	406
	123	3.2	149	3.1	219	2.7	57	11.491	GFL04-2M □□□080C32	406
	110	2.6	134	2.5	197	2.2	63	12.800	GFL04-2M □□□080C32	406
	96	2.5	116	2.4	171	2.1	73	14.706	GFL04-2M □□□080C32	406
	88	2.3	106	2.2	157	1.9	79	16.087	GFL04-2M □□□080C32	406
	79	1.9	95	1.8	141	1.6	88	17.920	GFL04-2M □□□080C32	406
	69	1.8	83	1.7	123	1.5	101	20.519	GFL04-2M □□□080C32	406
	62	1.5	75	1.4	110	1.3	113	22.857	GFL04-2M □□□080C32	406
	62	2.8	75	2.7	110	2.3	113	22.857	GFL05-2M □□□080C32	406
	57	2.8	69	2.8	101	2.7	123	24.850	GFL05-2M □□□080C32	406
	56	1.5	68	1.5	100	1.4	124	25.136	GFL04-2M □□□080C32	406
	50	1.2	61	1.2	90	1.2	138	28.000	GFL04-2M □□□080C32	406
	50	2.3	61	2.3	90	2.2	138	28.000	GFL05-2M □□□080C32	406
	45	1.2	54	1.2	80	1.1	156	31.600	GFL04-2M □□□080C32	406
	44	2.2	53	2.2	78	2.1	159	32.344	GFL05-2M □□□080C32	406
	40	1.0	49	1.0	72	0.9	174	35.200	GFL04-2M □□□080C32	406
	39	1.8	47	1.8	69	1.7	180	36.444	GFL05-2M □□□080C32	406
	35	0.9	42	0.9	62	0.9	201	40.697	GFL04-2M □□□080C32	406
	35	1.7	43	1.7	63	1.7	198	40.233	GFL05-2M □□□080C32	406
	35	2.9	42	2.9	62	2.8	201	40.800	GFL06-2M □□□080C32	406
	31	1.4	38	1.4	56	1.4	223	45.333	GFL05-2M □□□080C32	406
	31	2.7	37	2.7	55	2.6	227	45.963	GFL06-2M □□□080C32	406
	27	1.2	33	1.2	48	1.2	257	52.067	GFL05-2M □□□080C32	406
	27	2.5	32	2.5	48	2.4	260	52.800	GFL06-2M □□□080C32	406
	27	2.9	33	2.9	48	2.8	257	52.067	GFL07-2M □□□080C32	406
	24	1.1	29	1.1	43	1.1	289	58.667	GFL05-2M □□□080C32	406
	24	2.1	29	2.1	42	2.0	293	59.481	GFL06-2M □□□080C32	406
	24	2.9	29	2.9	43	2.8	289	58.667	GFL07-2M □□□080C32	406
	22	0.9	27	0.9	40	0.9	311	63.190	GFL05-2M □□□080C32	406
	22	1.8	27	1.8	39	1.7	316	64.080	GFL06-2M □□□080C32	406
	22	2.5	27	2.5	40	2.4	311	63.190	GFL07-2M □□□080C32	406
	22	2.8	26	2.8	39	2.8	317	65.306	GFL07-3M □□□080C32	414
	21	1.5	26	1.5	38	1.5	321	66.213	GFL06-3M □□□080C32	414
	20	0.9	24	0.9	35	0.9	351	71.200	GFL05-2M □□□080C32	406

50 Hz: P_N=0.75 kW
60 Hz: P_N=0.92 kW
87 Hz: P_N=1.35 kW

n_N	1410 r/min		1710 r/min		2520 r/min		M_2 [Nm]	i		
f_N	50 Hz		60 Hz		87 Hz					
P_N	0.75 kW		0.92 kW		1.35 kW					
	n_2 [r/min]	c	n_2 [r/min]	c	n_2 [r/min]	c				
	20	1.4	24	1.4	35	1.4	350	72.000	GFL06-3M □□□080C32	414
	20	1.7	24	1.7	35	1.7	356	72.189	GFL06-2M □□□080C32	406
	20	2.5	24	2.5	35	2.5	352	72.452	GFL07-3M □□□080C32	414
	20	2.5	24	2.5	35	2.5	351	71.200	GFL07-2M □□□080C32	406
	18	2.0	21	2.0	32	2.0	394	79.875	GFL07-2M □□□080C32	406
	17	1.1	21	1.1	31	1.1	399	81.000	GFL06-2M □□□080C32	406
	17	1.3	21	1.3	31	1.3	394	81.111	GFL06-3M □□□080C32	414
	17	2.5	21	2.5	31	2.5	396	81.636	GFL07-3M □□□080C32	414
	16	1.1	19	1.1	28	1.1	450	91.250	GFL06-2M □□□080C32	406
	16	1.1	19	1.1	29	1.1	428	88.200	GFL06-3M □□□080C32	414
	16	2.0	19	2.0	28	2.0	444	90.000	GFL07-2M □□□080C32	406
	15	2.1	19	2.1	27	2.1	449	92.413	GFL07-3M □□□080C32	414
	14	1.1	17	1.1	25	1.1	482	99.361	GFL06-3M □□□080C32	414
	14	2.1	16	2.1	24	2.1	506	104.127	GFL07-3M □□□080C32	414
	13	1.9	15	1.9	22	1.9	550	113.206	GFL07-3M □□□080C32	414
	12	0.9	15	0.9	22	0.9	566	116.571	GFL06-3M □□□080C32	414
	11	0.9	13	0.9	19	0.9	638	131.323	GFL06-3M □□□080C32	414
	11	1.9	13	1.9	20	1.9	619	127.556	GFL07-3M □□□080C32	414
	9.6	1.6	12	1.6	17	1.6	715	147.347	GFL07-3M □□□080C32	414
	9.5	2.8	12	2.8	17	2.8	722	148.815	GFL09-3M □□□080C32	414
	8.5	1.6	10	1.6	15	1.6	806	166.025	GFL07-3M □□□080C32	414
	8.4	2.8	10	2.8	15	2.8	814	167.712	GFL09-3M □□□080C32	414
	7.7	1.4	9.3	1.4	14	1.4	890	183.285	GFL07-3M □□□080C32	414
	7.6	2.5	9.2	2.5	14	2.5	899	185.111	GFL09-3M □□□080C32	414
	6.8	1.2	8.3	1.2	12	1.2	1003	206.519	GFL07-3M □□□080C32	414
	6.8	2.5	8.2	2.5	12	2.5	1013	208.617	GFL09-3M □□□080C32	414
	6.3	1.2	7.6	1.2	11	1.2	1090	224.636	GFL07-3M □□□080C32	414
	6.3	2.2	7.6	2.2	11	2.2	1091	224.778	GFL09-3M □□□080C32	414
	5.6	1.0	6.8	1.0	10	1.0	1229	253.111	GFL07-3M □□□080C32	414
	5.6	2.2	6.8	2.2	10	2.2	1230	253.321	GFL09-3M □□□080C32	414
	4.9	1.0	5.9	1.0	8.7	1.0	1411	290.706	GFL07-3M □□□080C32	414
	4.9	1.9	5.9	1.9	8.7	1.9	1412	290.889	GFL09-3M □□□080C32	414
	4.3	1.9	5.2	1.9	7.7	1.9	1591	327.827	GFL09-3M □□□080C32	414
	4	0.8	4.9	0.8	7.1	0.8	1713	352.811	GFL07-3M □□□080C32	414
	4	1.6	4.8	1.6	7.1	1.6	1714	353.033	GFL09-3M □□□080C32	414
	3.9	2.5	4.8	2.5	7	2.5	1738	358.077	GFL11-3M □□□080C32	414
	3.5	1.6	4.3	1.6	6.3	1.6	1931	397.863	GFL09-3M □□□080C32	414
	3.5	2.5	4.2	2.5	6.3	2.5	1959	403.467	GFL11-3M □□□080C32	414
	3.3	1.3	4	1.3	5.9	1.3	2059	424.247	GFL09-3M □□□080C32	414
	3.3	2.9	4	2.9	5.9	2.9	2088	430.222	GFL11-3M □□□080C32	414
	2.7	1.1	3.3	1.1	4.9	1.1	2499	514.881	GFL09-3M □□□080C32	414

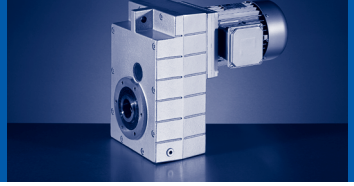

50 Hz: P_N=0.75 kW
60 Hz: P_N=0.92 kW
87 Hz: P_N=1.35 kW

n_N	1410 r/min		1710 r/min		2520 r/min		M_2 [Nm]	i		
f_N	50 Hz		60 Hz		87 Hz					
P_N	0.75 kW		0.92 kW		1.35 kW					
	n_2 [r/min]	c	n_2 [r/min]	c	n_2 [r/min]	c				
	2.7	2.3	3.3	2.3	4.8	2.3	2535	522.133	GFL11-3M □□□080C32	414
	2.5	2.0	3	2.0	4.5	2.0	2730	562.391	GFL11-3M □□□080C32	414
	2.2	1.9	2.7	1.9	4	1.9	3076	633.680	GFL11-3M □□□080C32	414
	1.8	1.5	2.1	1.5	3.2	1.5	3888	801.000	GFL11-3M □□□080C32	414

50 Hz: P_N=1.1 kW
60 Hz: P_N=1.3 kW

n_N	2720 r/min		3320 r/min				M_2 [Nm]	i		
f_N	50 Hz		60 Hz							
P_N	1.1 kW		1.3 kW							
	n_2 [r/min]	c	n_2 [r/min]	c						
	743	4.5	907	4.2			14	3.659	GFL04-2M □□□080C31	406
	542	4.5	662	4.2			19	5.018	GFL04-2M □□□080C31	406
	466	4.5	569	4.2			22	5.833	GFL04-2M □□□080C31	406
	424	3.8	517	3.6			24	6.422	GFL04-2M □□□080C31	406
	387	3.5	473	3.3			26	7.025	GFL04-2M □□□080C31	406
	325	4.5	396	4.2			31	8.379	GFL04-2M □□□080C31	406
	291	3.9	356	3.6			35	9.333	GFL04-2M □□□080C31	406
	266	3.4	324	3.2			38	10.238	GFL04-2M □□□080C31	406
	237	3.5	289	3.2			43	11.491	GFL04-2M □□□080C31	406
	213	2.8	259	2.7			48	12.800	GFL04-2M □□□080C31	406
	185	2.7	226	2.5			55	14.706	GFL04-2M □□□080C31	406
	169	2.5	206	2.3			60	16.087	GFL04-2M □□□080C31	406
	152	2.0	185	1.9			67	17.920	GFL04-2M □□□080C31	406
	133	2.0	162	1.8			77	20.519	GFL04-2M □□□080C31	406
	119	1.6	145	1.5			86	22.857	GFL04-2M □□□080C31	406
	119	3.0	145	2.8			86	22.857	GFL05-2M □□□080C31	406
	108	1.8	132	1.7			94	25.136	GFL04-2M □□□080C31	406
	97	1.5	119	1.4			105	28.000	GFL04-2M □□□080C31	406
	97	2.8	119	2.6			105	28.000	GFL05-2M □□□080C31	406
	86	1.5	105	1.4			118	31.600	GFL04-2M □□□080C31	406
	84	2.7	103	2.5			121	32.344	GFL05-2M □□□080C31	406
	77	1.2	94	1.1			132	35.200	GFL04-2M □□□080C31	406
	75	2.2	91	2.0			137	36.444	GFL05-2M □□□080C31	406
	68	2.1	83	2.0			151	40.233	GFL05-2M □□□080C31	406
	67	1.1	82	1.1			153	40.697	GFL04-2M □□□080C31	406
	60	0.9	73	0.9			170	45.333	GFL04-2M □□□080C31	406
	60	1.8	73	1.6			170	45.333	GFL05-2M □□□080C31	406
	52	1.5	64	1.4			195	52.067	GFL05-2M □□□080C31	406
	52	3.1	63	2.9			198	52.800	GFL06-2M □□□080C31	406
	46	1.4	57	1.3			220	58.667	GFL05-2M □□□080C31	406
	46	2.6	56	2.4			223	59.481	GFL06-2M □□□080C31	406
	44	0.9					228	61.653	GFL05-3M □□□080C31	414
	43	1.1	53	1.0			237	63.190	GFL05-2M □□□080C31	406
	43	3.1	53	2.9			237	63.190	GFL07-2M □□□080C31	406
	42	2.2	52	2.1			240	64.080	GFL06-2M □□□080C31	406
	41	2.0	50	2.0			244	66.213	GFL06-3M □□□080C31	414
	38	1.1	47	1.1			267	71.200	GFL05-2M □□□080C31	406
	38	1.9	46	1.8			266	72.000	GFL06-3M □□□080C31	414
	38	2.3	46	2.2			271	72.189	GFL06-2M □□□080C31	406
	38	3.3	46	3.1			267	72.452	GFL07-3M □□□080C31	414
	34	1.4	41	1.4			304	81.000	GFL06-2M □□□080C31	406

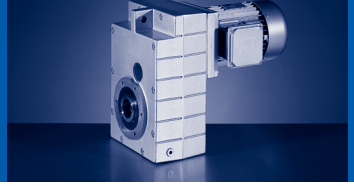

50 Hz: P_N=1.1 kW
60 Hz: P_N=1.3 kW

n_N	2720 r/min		3320 r/min				M_2 [Nm]	i		
f_N	50 Hz		60 Hz							
P_N	1.1 kW		1.3 kW							
	n_2 [r/min]	c	n_2 [r/min]	c						
	34	1.7	41	1.6			299	81.111	GFL06-3M □□□080C31	414
	34	2.7	42	2.6			299	79.875	GFL07-2M □□□080C31	406
	33	3.3	41	3.1			301	81.636	GFL07-3M □□□080C31	414
	31	1.5	38	1.5			326	88.200	GFL06-3M □□□080C31	414
	30	0.9	37	0.9			333	90.123	GFL05-3M □□□080C31	414
	30	1.4	36	1.4			342	91.250	GFL06-2M □□□080C31	406
	30	2.7	37	2.6			337	90.000	GFL07-2M □□□080C31	406
	29	2.8	36	2.7			341	92.413	GFL07-3M □□□080C31	414
	27	0.9	33	0.9			375	101.547	GFL05-3M □□□080C31	414
	27	1.5	33	1.5			367	99.361	GFL06-3M □□□080C31	414
	26	2.8	32	2.7			384	104.127	GFL07-3M □□□080C31	414
	24	2.5	29	2.4			418	113.206	GFL07-3M □□□080C31	414
	23	1.2	29	1.2			430	116.571	GFL06-3M □□□080C31	414
	21	1.2	25	1.2			485	131.323	GFL06-3M □□□080C31	414
	21	2.5	26	2.4			471	127.556	GFL07-3M □□□080C31	414
	19	1.1	23	1.0			533	144.320	GFL06-3M □□□080C31	414
	19	2.1	23	2.0			544	147.347	GFL07-3M □□□080C31	414
	17	1.0	20	1.0			600	162.583	GFL06-3M □□□080C31	414
	16	2.0	20	2.0			613	166.025	GFL07-3M □□□080C31	414
	15	0.9	19	0.9			663	179.520	GFL06-3M □□□080C31	414
	15	1.8	18	1.8			676	183.285	GFL07-3M □□□080C31	414
	13	0.8					746	202.237	GFL06-3M □□□080C31	414
	13	1.6	16	1.6			762	206.519	GFL07-3M □□□080C31	414
	12	1.6	15	1.6			829	224.636	GFL07-3M □□□080C31	414
	12	2.9	15	2.8			830	224.778	GFL09-3M □□□080C31	414
	11	1.4	13	1.3			934	253.111	GFL07-3M □□□080C31	414
	11	2.9	13	2.8			935	253.321	GFL09-3M □□□080C31	414
	9.4	1.3	11	1.2			1073	290.706	GFL07-3M □□□080C31	414
	9.4	2.5	11	2.4			1074	290.889	GFL09-3M □□□080C31	414
	8.3	1.0	10	1.0			1209	327.556	GFL07-3M □□□080C31	414
	8.3	2.5	10	2.4			1210	327.827	GFL09-3M □□□080C31	414
	7.7	1.1	9.4	1.0			1302	352.811	GFL07-3M □□□080C31	414
	7.7	2.2	9.4	2.1			1303	353.033	GFL09-3M □□□080C31	414
	6.8	0.9	8.4	0.8			1467	397.533	GFL07-3M □□□080C31	414
	6.8	2.2	8.3	2.1			1468	397.863	GFL09-3M □□□080C31	414
	6.4	1.7	7.8	1.7			1566	424.247	GFL09-3M □□□080C31	414
	5.3	1.4	6.5	1.4			1900	514.881	GFL09-3M □□□080C31	414
	5.2	3.1	6.4	3.0			1927	522.133	GFL11-3M □□□080C31	414
	4.9	1.0	6	1.0			2046	554.470	GFL09-3M □□□080C31	414
	4.8	2.6	5.9	2.5			2076	562.391	GFL11-3M □□□080C31	414
	4.4	1.0	5.3	1.0			2306	624.879	GFL09-3M □□□080C31	414

50 Hz: P_N=1.1 kW
60 Hz: P_N=1.3 kW

n_N	2720 r/min		3320 r/min				M_2 [Nm]	i		
f_N	50 Hz		60 Hz							
P_N	1.1 kW		1.3 kW							
	n_2 [r/min]	c	n_2 [r/min]	c						
	4.3	2.5	5.2	2.4			2339	633.680	GFL11-3M □□□080C31	414
	3.9	0.8					2587	700.875	GFL09-3M □□□080C31	414
	3.4	2.0	4.1	1.9			2956	801.000	GFL11-3M □□□080C31	414

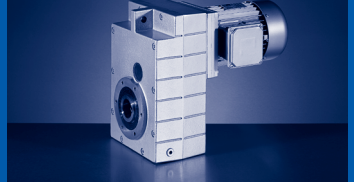

50 Hz: P_N=1.1 kW
60 Hz: P_N=1.3 kW
87 Hz: P_N=2.0 kW

n_N	1390 r/min		1690 r/min		2500 r/min		M_2 [Nm]	i		
f_N	50 Hz		60 Hz		87 Hz					
P_N	1.1 kW		1.3 kW		2.0 kW					
	n_2 [r/min]	c	n_2 [r/min]	c	n_2 [r/min]	c				
	380	4.1	462	3.9	683	3.4	27	3.659	GFL04-2M □□□080C42	406
	304	4.5	370	4.3	547	3.8	34	4.571	GFL05-2M □□□080C42	406
	277	3.0	337	2.9	498	2.6	37	5.018	GFL04-2M □□□080C42	406
	238	3.6	290	3.4	429	3.0	43	5.833	GFL04-2M □□□080C42	406
	216	2.4	263	2.3	389	2.0	47	6.422	GFL04-2M □□□080C42	406
	198	2.2	241	2.1	356	1.9	52	7.025	GFL04-2M □□□080C42	406
	166	2.9	202	2.8	298	2.5	61	8.379	GFL04-2M □□□080C42	406
	149	2.4	181	2.3	268	2.0	68	9.333	GFL04-2M □□□080C42	406
	136	2.1	165	2.0	244	1.8	75	10.238	GFL04-2M □□□080C42	406
	121	2.2	147	2.1	218	1.8	84	11.491	GFL04-2M □□□080C42	406
	109	1.8	132	1.7	195	1.5	94	12.800	GFL04-2M □□□080C42	406
	109	3.0	132	2.9	195	2.6	94	12.800	GFL05-2M □□□080C42	406
	96	2.8	116	2.7	172	2.4	107	14.538	GFL05-2M □□□080C42	406
	95	1.7	115	1.6	170	1.4	108	14.706	GFL04-2M □□□080C42	406
	87	2.7	106	2.6	157	2.2	117	15.904	GFL05-2M □□□080C42	406
	86	1.5	105	1.5	155	1.3	118	16.087	GFL04-2M □□□080C42	406
	78	1.3	94	1.2	140	1.1	131	17.920	GFL04-2M □□□080C42	406
	78	2.4	94	2.3	140	2.0	131	17.920	GFL05-2M □□□080C42	406
	69	2.2	83	2.2	123	1.9	149	20.286	GFL05-2M □□□080C42	406
	68	1.2	82	1.2	122	1.0	150	20.519	GFL04-2M □□□080C42	406
	61	1.0	74	1.0	109	0.8	168	22.857	GFL04-2M □□□080C42	406
	61	1.9	74	1.8	109	1.6	168	22.857	GFL05-2M □□□080C42	406
	56	1.9	68	1.9	101	1.8	182	24.850	GFL05-2M □□□080C42	406
	55	1.0	67	1.0	100	1.0	184	25.136	GFL04-2M □□□080C42	406
	50	0.8	60	0.8			205	28.000	GFL04-2M □□□080C42	406
	50	1.5	60	1.5	89	1.5	205	28.000	GFL05-2M □□□080C42	406
	49	2.9	60	2.9	88	2.8	208	28.389	GFL06-2M □□□080C42	406
	43	1.5	52	1.5	77	1.4	237	32.344	GFL05-2M □□□080C42	406
	42	2.7	52	2.7	76	2.6	241	32.800	GFL06-2M □□□080C42	406
	38	1.2	46	1.2	69	1.1	267	36.444	GFL05-2M □□□080C42	406
	38	2.3	46	2.3	68	2.2	271	36.951	GFL06-2M □□□080C42	406
	35	1.2	42	1.2	62	1.1	295	40.233	GFL05-2M □□□080C42	406
	35	3.1	43	3.1	63	3.0	291	39.642	GFL07-2M □□□080C42	406
	34	2.2	41	2.2	61	2.1	299	40.800	GFL06-2M □□□080C42	406
	31	1.0	37	1.0	55	0.9	332	45.333	GFL05-2M □□□080C42	406
	31	3.1	38	3.1	56	3.0	328	44.667	GFL07-2M □□□080C42	406
	30	1.8	37	1.8	54	1.7	337	45.963	GFL06-2M □□□080C42	406
	27	2.9	33	2.9	48	2.8	382	52.067	GFL07-2M □□□080C42	406
	26	1.7	32	1.7	47	1.6	387	52.800	GFL06-2M □□□080C42	406
	24	2.9	29	2.9	43	2.8	430	58.667	GFL07-2M □□□080C42	406
	23	1.4	28	1.4	42	1.4	436	59.481	GFL06-2M □□□080C42	406

50 Hz: P_N=1.1 kW
60 Hz: P_N=1.3 kW
87 Hz: P_N=2.0 kW

n_N	1390 r/min		1690 r/min		2500 r/min		M_2 [Nm]	i		
f_N	50 Hz		60 Hz		87 Hz					
P_N	1.1 kW		1.3 kW		2.0 kW					
	n_2 [r/min]	c	n_2 [r/min]	c	n_2 [r/min]	c				
	22	1.2	26	1.2	39	1.2	470	64.080	GFL06-2M □□□080C42	406
	22	2.3	27	2.3	40	2.2	463	63.190	GFL07-2M □□□080C42	406
	21	1.0	26	1.0	38	1.0	478	66.213	GFL06-3M □□□080C42	414
	21	1.9	26	1.9	38	1.9	472	65.306	GFL07-3M □□□080C42	414
	20	2.3	24	2.3	35	2.3	522	71.200	GFL07-2M □□□080C42	406
	19	1.0	24	1.0	35	1.0	520	72.000	GFL06-3M □□□080C42	414
	19	1.2	23	1.2	35	1.2	529	72.189	GFL06-2M □□□080C42	406
	19	1.7	23	1.7	35	1.7	523	72.452	GFL07-3M □□□080C42	414
	19	2.9	23	2.9	34	2.9	529	73.173	GFL09-3M □□□080C42	414
	17	0.9	21	0.9	31	0.9	586	81.111	GFL06-3M □□□080C42	414
	17	1.4	21	1.4	31	1.4	586	79.875	GFL07-2M □□□080C42	406
	17	1.7	21	1.7	31	1.7	590	81.636	GFL07-3M □□□080C42	414
	17	2.9	21	2.9	30	2.9	596	82.465	GFL09-3M □□□080C42	414
	15	1.4	19	1.4	28	1.4	660	90.000	GFL07-2M □□□080C42	406
	15	1.4	18	1.4	27	1.4	667	92.413	GFL07-3M □□□080C42	414
	15	2.5	18	2.5	27	2.5	674	93.333	GFL09-3M □□□080C42	414
	13	1.4	16	1.4	24	1.4	752	104.127	GFL07-3M □□□080C42	414
	13	2.5	16	2.5	24	2.5	760	105.185	GFL09-3M □□□080C42	414
	12	1.3	15	1.3	22	1.3	818	113.206	GFL07-3M □□□080C42	414
	12	2.2	15	2.2	22	2.2	826	114.333	GFL09-3M □□□080C42	414
	11	1.3	13	1.3	20	1.3	921	127.556	GFL07-3M □□□080C42	414
	11	2.2	13	2.2	19	2.2	931	128.852	GFL09-3M □□□080C42	414
	9.4	1.1	12	1.1	17	1.1	1064	147.347	GFL07-3M □□□080C42	414
	9.3	1.9	11	1.9	17	1.9	1075	148.815	GFL09-3M □□□080C42	414
	8.4	1.0	10	1.0	15	1.0	1199	166.025	GFL07-3M □□□080C42	414
	8.3	1.9	10	1.9	15	1.9	1211	167.712	GFL09-3M □□□080C42	414
	7.6	0.9	9.2	0.9	14	0.9	1324	183.285	GFL07-3M □□□080C42	414
	7.6	3.1	9.3	3.1	14	3.1	1320	182.792	GFL11-3M □□□080C42	414
	7.5	1.7	9.1	1.7	14	1.7	1337	185.111	GFL09-3M □□□080C42	414
	6.8	3.1	8.2	3.1	12	3.1	1488	205.963	GFL11-3M □□□080C42	414
	6.7	0.8	8.2	0.8	12	0.8	1492	206.519	GFL07-3M □□□080C42	414
	6.7	1.7	8.1	1.7	12	1.7	1507	208.617	GFL09-3M □□□080C42	414
	6.2	0.8	7.5	0.8	11	0.8	1622	224.636	GFL07-3M □□□080C42	414
	6.2	1.5	7.5	1.5	11	1.5	1623	224.778	GFL09-3M □□□080C42	414
	6.2	2.8	7.5	2.8	11	2.8	1622	224.636	GFL11-3M □□□080C42	414
	5.5	1.5	6.7	1.5	9.9	1.5	1830	253.321	GFL09-3M □□□080C42	414
	5.5	2.8	6.7	2.8	9.9	2.8	1828	253.111	GFL11-3M □□□080C42	414
	5.2	2.7	6.3	2.7	9.4	2.7	1930	267.259	GFL11-3M □□□080C42	414
	4.8	1.3	5.8	1.3	8.6	1.3	2101	290.889	GFL09-3M □□□080C42	414
	4.2	1.3	5.2	1.3	7.6	1.3	2368	327.827	GFL09-3M □□□080C42	414
	4.2	2.3	5.2	2.3	7.6	2.3	2366	327.556	GFL11-3M □□□080C42	414

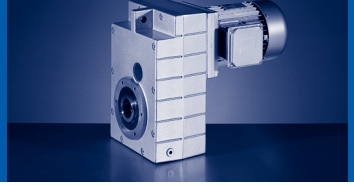

50 Hz: P_N=1.1 kW
60 Hz: P_N=1.3 kW
87 Hz: P_N=2.0 kW

n_N	1390 r/min		1690 r/min		2500 r/min		M_2 [Nm]	i		
f_N	50 Hz		60 Hz		87 Hz					
P_N	1.1 kW		1.3 kW		2.0 kW					
	n_2 [r/min]	c	n_2 [r/min]	c	n_2 [r/min]	c				
	3.9	1.1	4.8	1.1	7.1	1.1	2550	353.033	GFL09-3M □□□080C42	414
	3.9	2.0	4.7	2.0	7	2.0	2586	358.077	GFL11-3M □□□080C42	414
	3.5	1.1	4.3	1.1	6.3	1.1	2873	397.863	GFL09-3M □□□080C42	414
	3.5	2.0	4.2	2.0	6.2	2.0	2914	403.467	GFL11-3M □□□080C42	414
	3.3	0.9	4	0.9	5.9	0.9	3064	424.247	GFL09-3M □□□080C42	414
	3.2	1.9	3.9	1.9	5.8	1.9	3107	430.222	GFL11-3M □□□080C42	414
	2.7	1.6	3.2	1.6	4.8	1.6	3771	522.133	GFL11-3M □□□080C42	414
	2.5	1.3	3	1.3	4.5	1.3	4062	562.391	GFL11-3M □□□080C42	414
	2.2	1.3	2.7	1.3	4	1.3	4576	633.680	GFL11-3M □□□080C42	414
	1.7	1.0	2.1	1.0	3.1	1.0	5785	801.000	GFL11-3M □□□080C42	414

50 Hz: P_N=1.5 kW
60 Hz: P_N=1.8 kW

n_N	2710 r/min		3310 r/min				M_2 [Nm]	i		
f_N	50 Hz		60 Hz							
P_N	1.5 kW		1.8 kW							
	n_2 [r/min]	c	n_2 [r/min]	c						
	741	4.8	905	4.5			19	3.659	GFL04-2M □□□090C11	410
	593	6.0	724	5.6			23	4.571	GFL05-2M □□□090C11	406
	540	3.6	660	3.3			26	5.018	GFL04-2M □□□090C11	410
	465	4.2	567	3.9			30	5.833	GFL04-2M □□□090C11	410
	422	2.8	515	2.6			33	6.422	GFL04-2M □□□090C11	410
	386	2.6	471	2.4			36	7.025	GFL04-2M □□□090C11	410
	323	3.4	395	3.2			43	8.379	GFL04-2M □□□090C11	410
	290	2.8	355	2.7			48	9.333	GFL04-2M □□□090C11	410
	265	2.5	323	2.3			53	10.238	GFL04-2M □□□090C11	410
	236	2.5	288	2.4			59	11.491	GFL04-2M □□□090C11	410
	212	2.1	259	1.9			66	12.800	GFL04-2M □□□090C11	410
	184	2.0	225	1.9			75	14.706	GFL04-2M □□□090C11	410
	170	3.1	208	2.9			82	15.904	GFL05-2M □□□090C11	406
	169	1.8	206	1.7			83	16.087	GFL04-2M □□□090C11	410
	151	1.5	185	1.4			92	17.920	GFL04-2M □□□090C11	410
	151	2.8	185	2.6			92	17.920	GFL05-2M □□□090C11	406
	134	2.6	163	2.5			104	20.286	GFL05-2M □□□090C11	406
	132	1.4	161	1.3			105	20.519	GFL04-2M □□□090C11	410
	119	1.2	145	1.1			117	22.857	GFL04-2M □□□090C11	410
	119	2.2	145	2.1			117	22.857	GFL05-2M □□□090C11	406
	109	2.5	133	2.4			127	24.850	GFL05-2M □□□090C11	406
	108	1.3	132	1.2			129	25.136	GFL04-2M □□□090C11	410
	97	1.1	118	1.0			144	28.000	GFL04-2M □□□090C11	410
	97	2.0	118	1.9			144	28.000	GFL05-2M □□□090C11	406
	84	1.9	102	1.8			166	32.344	GFL05-2M □□□090C11	406
	74	1.6	91	1.5			187	36.444	GFL05-2M □□□090C11	406
	73	3.0	90	2.8			190	36.951	GFL06-2M □□□090C11	406
	67	1.6	82	1.5			206	40.233	GFL05-2M □□□090C11	406
	66	2.9	81	2.7			209	40.800	GFL06-2M □□□090C11	406
	60	1.3	73	1.2			233	45.333	GFL05-2M □□□090C11	406
	59	2.4	72	2.3			236	45.963	GFL06-2M □□□090C11	406
	51	2.3	63	2.1			271	52.800	GFL06-2M □□□090C11	406
	46	1.9	56	1.8			305	59.481	GFL06-2M □□□090C11	406
	42	1.6	52	1.5			329	64.080	GFL06-2M □□□090C11	406
	42	2.7	51	2.6			330	65.306	GFL07-3M □□□090C11	414
	41	1.5	50	1.4			335	66.213	GFL06-3M □□□090C11	414
	38	1.4	46	1.3			364	72.000	GFL06-3M □□□090C11	414
	38	1.7	46	1.6			370	72.189	GFL06-2M □□□090C11	406
	37	2.4	46	2.3			366	72.452	GFL07-3M □□□090C11	414
	34	2.1	41	2.0			410	79.875	GFL07-2M □□□090C11	406
	33	1.2	41	1.2			410	81.111	GFL06-3M □□□090C11	414

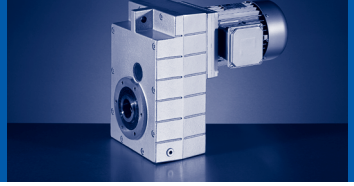

50 Hz: P_N=1.5 kW
60 Hz: P_N=1.8 kW

n_N	2710 r/min		3310 r/min				M_2 [Nm]	i		
f_N	50 Hz		60 Hz							
P_N	1.5 kW		1.8 kW							
	n_2 [r/min]	c	n_2 [r/min]	c						
	33	2.4	41	2.3			412	81.636	GFL07-3M □□□090C11	414
	31	1.1	38	1.1			446	88.200	GFL06-3M □□□090C11	414
	30	2.0	37	2.0			462	90.000	GFL07-2M □□□090C11	406
	29	2.1	36	2.0			467	92.413	GFL07-3M □□□090C11	414
	27	1.1	33	1.1			502	99.361	GFL06-3M □□□090C11	414
	26	2.1	32	2.0			526	104.127	GFL07-3M □□□090C11	414
	24	1.8	29	1.8			572	113.206	GFL07-3M □□□090C11	414
	24	3.2	29	3.1			578	114.333	GFL09-3M □□□090C11	414
	21	0.9	25	0.9			663	131.323	GFL06-3M □□□090C11	414
	21	1.8	26	1.8			644	127.556	GFL07-3M □□□090C11	414
	21	3.2	26	3.1			651	128.852	GFL09-3M □□□090C11	414
	18	1.5	23	1.5			744	147.347	GFL07-3M □□□090C11	414
	18	2.7	22	2.6			752	148.815	GFL09-3M □□□090C11	414
	16	1.5	20	1.4			839	166.025	GFL07-3M □□□090C11	414
	16	2.7	20	2.6			847	167.712	GFL09-3M □□□090C11	414
	15	1.3	18	1.3			926	183.285	GFL07-3M □□□090C11	414
	15	2.4	18	2.3			935	185.111	GFL09-3M □□□090C11	414
	13	1.2	16	1.2			1043	206.519	GFL07-3M □□□090C11	414
	13	2.4	16	2.3			1054	208.617	GFL09-3M □□□090C11	414
	12	1.2	15	1.2			1135	224.636	GFL07-3M □□□090C11	414
	12	2.1	15	2.1			1135	224.778	GFL09-3M □□□090C11	414
	11	1.0	13	1.0			1279	253.111	GFL07-3M □□□090C11	414
	11	2.1	13	2.1			1280	253.321	GFL09-3M □□□090C11	414
	9.3	1.8	11	1.7			1469	290.889	GFL09-3M □□□090C11	414
	8.3	1.8	10	1.7			1656	327.827	GFL09-3M □□□090C11	414
	7.7	1.6	9.4	1.5			1783	353.033	GFL09-3M □□□090C11	414
	7.6	2.9	9.2	2.8			1809	358.077	GFL11-3M □□□090C11	414
	6.8	1.6	8.3	1.5			2010	397.863	GFL09-3M □□□090C11	414
	6.7	2.9	8.2	2.8			2038	403.467	GFL11-3M □□□090C11	414
	6.4	1.3	7.8	1.2			2143	424.247	GFL09-3M □□□090C11	414
	6.3	2.7	7.7	2.7			2173	430.222	GFL11-3M □□□090C11	414
	5.3	1.1	6.4	1.0			2601	514.881	GFL09-3M □□□090C11	414
	5.2	2.3	6.3	2.2			2637	522.133	GFL11-3M □□□090C11	414
	4.8	1.9	5.9	1.8			2841	562.391	GFL11-3M □□□090C11	414
	4.8	3.2	5.9	3.1			2841	562.391	GFL14-3M □□□090C11	414
	4.3	1.8	5.2	1.8			3201	633.680	GFL11-3M □□□090C11	414
	4.3	3.1	5.2	3.0			3201	633.680	GFL14-3M □□□090C11	414
	3.4	1.4	4.1	1.4			4046	801.000	GFL11-3M □□□090C11	414
	3.4	2.4	4.1	2.4			4046	801.000	GFL14-3M □□□090C11	414

50 Hz: P_N=1.5 kW
60 Hz: P_N=1.8 kW
87 Hz: P_N=2.7 kW

n_N	1410 r/min		1710 r/min		2520 r/min		M_2 [Nm]	i		
f_N	50 Hz		60 Hz		87 Hz					
P_N	1.5 kW		1.8 kW		2.7 kW					
	n_2 [r/min]	c	n_2 [r/min]	c	n_2 [r/min]	c				
	381	3.0	463	2.9	685	2.5	37	3.659	GFL04-2M □□□090C32	410
	305	3.7	371	3.6	548	3.2	46	4.571	GFL05-2M □□□090C32	406
	278	2.2	338	2.1	499	1.9	50	5.018	GFL04-2M □□□090C32	410
	239	2.6	291	2.5	429	2.2	58	5.833	GFL04-2M □□□090C32	410
	218	2.7	265	2.6	391	2.3	64	6.400	GFL05-2M □□□090C32	406
	217	1.8	264	1.7	390	1.5	64	6.422	GFL04-2M □□□090C32	410
	199	1.6	241	1.6	357	1.4	70	7.025	GFL04-2M □□□090C32	410
	167	2.1	202	2.1	299	1.8	84	8.379	GFL04-2M □□□090C32	410
	155	3.0	188	2.8	278	2.5	90	9.010	GFL05-2M □□□090C32	406
	150	1.8	182	1.7	268	1.5	93	9.333	GFL04-2M □□□090C32	410
	140	2.8	170	2.7	252	2.3	99	9.946	GFL05-2M □□□090C32	406
	136	1.6	166	1.5	245	1.3	102	10.238	GFL04-2M □□□090C32	410
	123	2.5	149	2.4	221	2.1	113	11.360	GFL05-2M □□□090C32	406
	121	1.6	148	1.5	218	1.3	115	11.491	GFL04-2M □□□090C32	410
	109	1.3	132	1.3	196	1.1	128	12.800	GFL04-2M □□□090C32	410
	109	2.2	132	2.1	196	1.9	128	12.800	GFL05-2M □□□090C32	406
	96	2.1	117	2.0	172	1.8	145	14.538	GFL05-2M □□□090C32	406
	95	1.2	115	1.2	170	1.1	147	14.706	GFL04-2M □□□090C32	410
	88	2.0	107	1.9	158	1.7	158	15.904	GFL05-2M □□□090C32	406
	87	1.1	105	1.1	156	1.0	160	16.087	GFL04-2M □□□090C32	410
	78	0.9	95	0.9			179	17.920	GFL04-2M □□□090C32	410
	78	1.8	95	1.7	140	1.5	179	17.920	GFL05-2M □□□090C32	406
	69	1.7	84	1.6	124	1.4	202	20.286	GFL05-2M □□□090C32	406
	68	0.9	83	0.9			204	20.519	GFL04-2M □□□090C32	410
	68	3.2	82	3.0	122	2.7	205	20.571	GFL06-2M □□□090C32	406
	61	1.4	74	1.3	110	1.2	228	22.857	GFL05-2M □□□090C32	406
	60	2.6	73	2.5	108	2.2	231	23.175	GFL06-2M □□□090C32	406
	56	1.4	68	1.4	101	1.3	248	24.850	GFL05-2M □□□090C32	406
	55	2.6	67	2.6	99	2.5	251	25.200	GFL06-2M □□□090C32	406
	50	1.1	61	1.1	90	1.1	279	28.000	GFL05-2M □□□090C32	406
	49	2.2	60	2.2	88	2.1	283	28.389	GFL06-2M □□□090C32	406
	43	1.1	52	1.1	77	1.0	322	32.344	GFL05-2M □□□090C32	406
	43	2.0	52	2.0	76	1.9	327	32.800	GFL06-2M □□□090C32	406
	38	0.9	47	0.9	69	0.8	363	36.444	GFL05-2M □□□090C32	406
	38	1.7	46	1.7	68	1.6	368	36.951	GFL06-2M □□□090C32	406
	35	0.9	42	0.9	62	0.8	401	40.233	GFL05-2M □□□090C32	406
	35	2.8	43	2.8	63	2.7	395	39.642	GFL07-2M □□□090C32	406
	34	1.6	42	1.6	61	1.6	407	40.800	GFL06-2M □□□090C32	406
	31	2.8	38	2.8	56	2.7	445	44.667	GFL07-2M □□□090C32	406
	30	1.3	37	1.3	55	1.3	458	45.963	GFL06-2M □□□090C32	406
	27	2.4	33	2.4	48	2.3	519	52.067	GFL07-2M □□□090C32	406

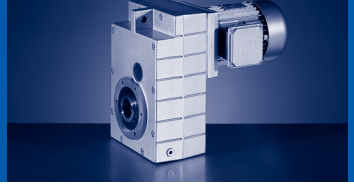

50 Hz: P_N=1.5 kW
60 Hz: P_N=1.8 kW
87 Hz: P_N=2.7 kW

n_N	1410 r/min		1710 r/min		2520 r/min		M_2 [Nm]	i		
f_N	50 Hz		60 Hz		87 Hz					
P_N	1.5 kW		1.8 kW		2.7 kW					
	n_2 [r/min]	c	n_2 [r/min]	c	n_2 [r/min]	c				
	27	2.8	33	2.8	49	2.7	511	51.333	GFL09-2M □□□090C32	406
	26	1.3	32	1.3	47	1.2	526	52.800	GFL06-2M □□□090C32	406
	24	1.0	29	1.0	42	1.0	593	59.481	GFL06-2M □□□090C32	406
	24	2.2	29	2.2	43	2.1	585	58.667	GFL07-2M □□□090C32	406
	24	2.8	29	2.8	43	2.7	576	57.852	GFL09-2M □□□090C32	406
	22	0.9	27	0.9	39	0.9	638	64.080	GFL06-2M □□□090C32	406
	22	2.0	27	2.0	40	1.9	630	63.190	GFL07-2M □□□090C32	406
	22	2.4	27	2.4	40	2.3	621	63.326	GFL09-3M □□□090C32	414
	22	2.5	27	2.5	40	2.4	621	62.300	GFL09-2M □□□090C32	406
	21	1.4	26	1.4	38	1.4	641	65.306	GFL07-3M □□□090C32	414
	20	1.8	24	1.8	35	1.8	709	71.200	GFL07-2M □□□090C32	406
	20	2.5	24	2.5	36	2.5	700	70.211	GFL09-2M □□□090C32	406
	19	0.9	24	0.9	35	0.9	719	72.189	GFL06-2M □□□090C32	406
	19	1.2	23	1.2	35	1.2	711	72.452	GFL07-3M □□□090C32	414
	19	2.1	23	2.1	34	2.1	718	73.173	GFL09-3M □□□090C32	414
	18	1.1	21	1.1	31	1.1	796	79.875	GFL07-2M □□□090C32	406
	18	1.9	22	1.9	32	1.9	785	78.750	GFL09-2M □□□090C32	406
	17	1.2	21	1.2	31	1.2	801	81.636	GFL07-3M □□□090C32	414
	17	2.1	21	2.1	30	2.1	809	82.465	GFL09-3M □□□090C32	414
	16	1.0	19	1.0	28	1.0	897	90.000	GFL07-2M □□□090C32	406
	16	1.9	19	1.9	28	1.9	884	88.750	GFL09-2M □□□090C32	406
	15	1.1	18	1.1	27	1.1	907	92.413	GFL07-3M □□□090C32	414
	15	1.9	18	1.9	27	1.9	916	93.333	GFL09-3M □□□090C32	414
	13	1.1	16	1.1	24	1.1	1022	104.127	GFL07-3M □□□090C32	414
	13	1.9	16	1.9	24	1.9	1032	105.185	GFL09-3M □□□090C32	414
	12	0.9	15	0.9	22	0.9	1111	113.206	GFL07-3M □□□090C32	414
	12	1.7	15	1.7	22	1.7	1122	114.333	GFL09-3M □□□090C32	414
	11	0.9	13	0.9	20	0.9	1252	127.556	GFL07-3M □□□090C32	414
	11	1.7	13	1.7	19	1.7	1264	128.852	GFL09-3M □□□090C32	414
	9.4	1.4	11	1.4	17	1.4	1460	148.815	GFL09-3M □□□090C32	414
	9.4	2.7	11	2.7	17	2.7	1464	149.144	GFL11-3M □□□090C32	414
	8.3	1.4	10	1.4	15	1.4	1646	167.712	GFL09-3M □□□090C32	414
	8.3	2.7	10	2.7	15	2.7	1649	168.049	GFL11-3M □□□090C32	414
	7.6	2.4	9.3	2.4	14	2.4	1794	182.792	GFL11-3M □□□090C32	414
	7.5	1.2	9.2	1.2	14	1.2	1817	185.111	GFL09-3M □□□090C32	414
	6.9	2.8	8.4	2.8	12	2.8	1983	202.074	GFL14-3M □□□090C32	414
	6.8	2.4	8.2	2.4	12	2.4	2021	205.963	GFL11-3M □□□090C32	414
	6.7	1.2	8.1	1.2	12	1.2	2047	208.617	GFL09-3M □□□090C32	414
	6.2	1.1	7.5	1.1	11	1.1	2206	224.778	GFL09-3M □□□090C32	414
	6.2	2.1	7.6	2.1	11	2.1	2204	224.636	GFL11-3M □□□090C32	414
	5.5	1.1	6.7	1.1	9.9	1.1	2486	253.321	GFL09-3M □□□090C32	414

50 Hz: P_N=1.5 kW
60 Hz: P_N=1.8 kW
87 Hz: P_N=2.7 kW

n_N	1410 r/min		1710 r/min		2520 r/min		M_2 [Nm]	i		
f_N	50 Hz		60 Hz		87 Hz					
P_N	1.5 kW		1.8 kW		2.7 kW					
	n_2 [r/min]	c	n_2 [r/min]	c	n_2 [r/min]	c				
	5.5	2.1	6.7	2.1	9.9	2.1	2484	253.111	GFL11-3M □□□090C32	414
	5.2	2.0	6.3	2.0	9.4	2.0	2623	267.259	GFL11-3M □□□090C32	414
	4.8	0.9	5.8	0.9	8.6	0.9	2855	290.889	GFL09-3M □□□090C32	414
	4.3	0.9	5.2	0.9	7.6	0.9	3217	327.827	GFL09-3M □□□090C32	414
	4.3	1.7	5.2	1.7	7.7	1.7	3214	327.556	GFL11-3M □□□090C32	414
	4	0.8	4.8	0.8	7.1	0.8	3464	353.033	GFL09-3M □□□090C32	414
	4	2.5	4.8	2.5	7.1	2.5	3462	352.811	GFL14-3M □□□090C32	414
	3.9	1.5	4.7	1.5	7	1.5	3514	358.077	GFL11-3M □□□090C32	414
	3.5	0.8	4.3	0.8	6.3	0.8	3904	397.863	GFL09-3M □□□090C32	414
	3.5	1.5	4.2	1.5	6.2	1.5	3959	403.467	GFL11-3M □□□090C32	414
	3.5	2.5	4.3	2.5	6.3	2.5	3901	397.533	GFL14-3M □□□090C32	414
	3.2	1.4	3.9	1.4	5.8	1.4	4222	430.222	GFL11-3M □□□090C32	414
	3.2	2.5	3.9	2.5	5.8	2.5	4222	430.222	GFL14-3M □□□090C32	414
	2.7	1.2	3.3	1.2	4.8	1.2	5124	522.133	GFL11-3M □□□090C32	414
	2.7	2.1	3.3	2.1	4.8	2.1	5124	522.133	GFL14-3M □□□090C32	414
	2.5	1.0	3	1.0	4.5	1.0	5519	562.391	GFL11-3M □□□090C32	414
	2.5	1.6	3	1.6	4.5	1.6	5519	562.391	GFL14-3M □□□090C32	414
	2.2	0.9	2.7	0.9	4	0.9	6218	633.680	GFL11-3M □□□090C32	414
	2.2	1.6	2.7	1.6	4	1.6	6218	633.680	GFL14-3M □□□090C32	414
	1.7	1.3	2.1	1.3	3.1	1.3	7860	801.000	GFL14-3M □□□090C32	414

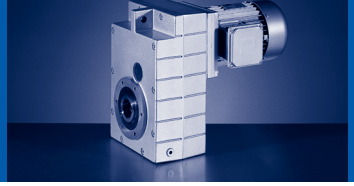

50 Hz: P_N=2.2 kW
60 Hz: P_N=2.6 kW

n_N	2730 r/min		3330 r/min				M_2 [Nm]	i		
f_N	50 Hz		60 Hz							
P_N	2.2 kW		2.6 kW							
	n_2 [r/min]	c	n_2 [r/min]	c						
	746	3.3	910	3.1			27	3.659	GFL04-2M □□□090C31	410
	597	4.1	728	3.8			34	4.571	GFL05-2M □□□090C31	406
	544	2.4	664	2.3			38	5.018	GFL04-2M □□□090C31	410
	468	2.9	571	2.7			44	5.833	GFL04-2M □□□090C31	410
	427	3.0	520	2.8			48	6.400	GFL05-2M □□□090C31	406
	425	1.9	519	1.8			48	6.422	GFL04-2M □□□090C31	410
	389	1.8	474	1.7			53	7.025	GFL04-2M □□□090C31	410
	326	2.3	397	2.2			63	8.379	GFL04-2M □□□090C31	410
	303	3.2	370	3.0			67	9.010	GFL05-2M □□□090C31	406
	293	1.9	357	1.8			70	9.333	GFL04-2M □□□090C31	410
	275	3.0	335	2.8			74	9.946	GFL05-2M □□□090C31	406
	267	1.7	325	1.6			76	10.238	GFL04-2M □□□090C31	410
	240	2.7	293	2.5			85	11.360	GFL05-2M □□□090C31	406
	238	1.7	290	1.6			86	11.491	GFL04-2M □□□090C31	410
	213	1.4	260	1.3			96	12.800	GFL04-2M □□□090C31	410
	213	2.4	260	2.3			96	12.800	GFL05-2M □□□090C31	406
	188	2.3	229	2.1			109	14.538	GFL05-2M □□□090C31	406
	186	1.4	226	1.3			110	14.706	GFL04-2M □□□090C31	410
	172	2.1	209	2.0			119	15.904	GFL05-2M □□□090C31	406
	170	1.2	207	1.2			120	16.087	GFL04-2M □□□090C31	410
	152	1.0	186	1.0			134	17.920	GFL04-2M □□□090C31	410
	152	1.9	186	1.8			134	17.920	GFL05-2M □□□090C31	406
	135	1.8	164	1.7			152	20.286	GFL05-2M □□□090C31	406
	133	1.0	162	0.9			153	20.519	GFL04-2M □□□090C31	410
	119	0.8					171	22.857	GFL04-2M □□□090C31	410
	119	1.5	146	1.4			171	22.857	GFL05-2M □□□090C31	406
	118	2.9	144	2.7			173	23.175	GFL06-2M □□□090C31	406
	110	1.7	134	1.6			186	24.850	GFL05-2M □□□090C31	406
	109	0.9	133	0.9			188	25.136	GFL04-2M □□□090C31	410
	108	3.2	132	3.0			188	25.200	GFL06-2M □□□090C31	406
	98	1.4	119	1.3			209	28.000	GFL05-2M □□□090C31	406
	96	2.7	117	2.5			212	28.389	GFL06-2M □□□090C31	406
	84	1.3	103	1.2			242	32.344	GFL05-2M □□□090C31	406
	83	2.4	102	2.3			245	32.800	GFL06-2M □□□090C31	406
	75	1.1	91	1.0			272	36.444	GFL05-2M □□□090C31	406
	74	2.1	90	1.9			276	36.951	GFL06-2M □□□090C31	406
	68	1.1	83	1.0			300	40.233	GFL05-2M □□□090C31	406
	67	2.0	82	1.9			305	40.800	GFL06-2M □□□090C31	406
	60	0.9	74	0.8			339	45.333	GFL05-2M □□□090C31	406
	59	1.7	72	1.6			343	45.963	GFL06-2M □□□090C31	406
	52	1.6	63	1.5			394	52.800	GFL06-2M □□□090C31	406

50 Hz: P_N=2.2 kW
60 Hz: P_N=2.6 kW

n_N	2730 r/min		3330 r/min				M_2 [Nm]	i		
f_N	50 Hz		60 Hz							
P_N	2.2 kW		2.6 kW							
	n_2 [r/min]	c	n_2 [r/min]	c						
	52	2.9	64	2.8			389	52.067	GFL07-2M □□□090C31	406
	47	2.7	57	2.5			438	58.667	GFL07-2M □□□090C31	406
	46	1.3	56	1.2			444	59.481	GFL06-2M □□□090C31	406
	44	3.1	54	2.9			465	62.300	GFL09-2M □□□090C31	406
	43	1.1	52	1.1			478	64.080	GFL06-2M □□□090C31	406
	43	2.5	53	2.3			472	63.190	GFL07-2M □□□090C31	406
	43	3.0	53	2.8			466	63.326	GFL09-3M □□□090C31	414
	42	1.8	51	1.8			480	65.306	GFL07-3M □□□090C31	414
	41	1.0	50	1.0			487	66.213	GFL06-3M □□□090C31	414
	38	0.9	46	0.9			530	72.000	GFL06-3M □□□090C31	414
	38	1.1	46	1.1			539	72.189	GFL06-2M □□□090C31	406
	38	1.6	46	1.6			533	72.452	GFL07-3M □□□090C31	414
	38	2.4	47	2.3			532	71.200	GFL07-2M □□□090C31	406
	37	2.8	46	2.7			538	73.173	GFL09-3M □□□090C31	414
	35	2.6	42	2.5			588	78.750	GFL09-2M □□□090C31	406
	34	0.8	41	0.8			597	81.111	GFL06-3M □□□090C31	414
	34	1.4	42	1.4			596	79.875	GFL07-2M □□□090C31	406
	33	1.6	41	1.6			600	81.636	GFL07-3M □□□090C31	414
	33	2.8	40	2.7			607	82.465	GFL09-3M □□□090C31	414
	31	2.6	38	2.5			663	88.750	GFL09-2M □□□090C31	406
	30	1.4	37	1.3			672	90.000	GFL07-2M □□□090C31	406
	30	1.4	36	1.4			680	92.413	GFL07-3M □□□090C31	414
	29	2.5	36	2.4			686	93.333	GFL09-3M □□□090C31	414
	26	1.4	32	1.4			766	104.127	GFL07-3M □□□090C31	414
	26	2.5	32	2.4			774	105.185	GFL09-3M □□□090C31	414
	24	1.3	29	1.2			833	113.206	GFL07-3M □□□090C31	414
	24	2.2	29	2.1			841	114.333	GFL09-3M □□□090C31	414
	21	1.3	26	1.2			938	127.556	GFL07-3M □□□090C31	414
	21	2.2	26	2.1			948	128.852	GFL09-3M □□□090C31	414
	19	1.1	23	1.0			1084	147.347	GFL07-3M □□□090C31	414
	18	1.9	22	1.8			1094	148.815	GFL09-3M □□□090C31	414
	16	1.0	20	1.0			1221	166.025	GFL07-3M □□□090C31	414
	16	1.9	20	1.8			1233	167.712	GFL09-3M □□□090C31	414
	15	0.9	18	0.9			1348	183.285	GFL07-3M □□□090C31	414
	15	1.6	18	1.6			1361	185.111	GFL09-3M □□□090C31	414
	15	3.2	18	3.0			1344	182.792	GFL11-3M □□□090C31	414
	13	0.8					1519	206.519	GFL07-3M □□□090C31	414
	13	1.6	16	1.6			1534	208.617	GFL09-3M □□□090C31	414
	13	3.2	16	3.0			1515	205.963	GFL11-3M □□□090C31	414
	12	0.8					1652	224.636	GFL07-3M □□□090C31	414
	12	1.5	15	1.4			1653	224.778	GFL09-3M □□□090C31	414

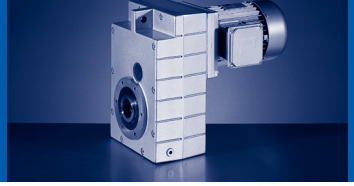

50 Hz: P_N=2.2 kW
60 Hz: P_N=2.6 kW

n_N	2730 r/min		3330 r/min				M_2 [Nm]	i		
f_N	50 Hz		60 Hz							
P_N	2.2 kW		2.6 kW							
	n_2 [r/min]	c	n_2 [r/min]	c						
	12	2.7	15	2.6			1652	224.636	GFL11-3M □□□090C31	414
	11	1.5	13	1.4			1863	253.321	GFL09-3M □□□090C31	414
	11	2.7	13	2.6			1861	253.111	GFL11-3M □□□090C31	414
	10	2.6	13	2.5			1966	267.259	GFL11-3M □□□090C31	414
	9.4	1.2	11	1.2			2139	290.889	GFL09-3M □□□090C31	414
	8.3	1.2	10	1.2			2411	327.827	GFL09-3M □□□090C31	414
	8.3	2.3	10	2.2			2409	327.556	GFL11-3M □□□090C31	414
	7.7	1.1	9.4	1.1			2596	353.033	GFL09-3M □□□090C31	414
	7.6	2.0	9.3	1.9			2633	358.077	GFL11-3M □□□090C31	414
	6.9	1.1	8.4	1.1			2926	397.863	GFL09-3M □□□090C31	414
	6.8	2.0	8.3	1.9			2967	403.467	GFL11-3M □□□090C31	414
	6.4	0.9	7.9	0.8			3120	424.247	GFL09-3M □□□090C31	414
	6.4	1.9	7.7	1.8			3164	430.222	GFL11-3M □□□090C31	414
	5.2	1.6	6.4	1.5			3840	522.133	GFL11-3M □□□090C31	414
	5.2	2.8	6.4	2.7			3840	522.133	GFL14-3M □□□090C31	414
	4.9	1.3	5.9	1.2			4136	562.391	GFL11-3M □□□090C31	414
	4.9	2.2	5.9	2.1			4136	562.391	GFL14-3M □□□090C31	414
	4.3	1.3	5.3	1.2			4660	633.680	GFL11-3M □□□090C31	414
	4.3	2.1	5.3	2.0			4660	633.680	GFL14-3M □□□090C31	414
	3.4	1.0	4.2	1.0			5891	801.000	GFL11-3M □□□090C31	414
	3.4	1.7	4.2	1.6			5891	801.000	GFL14-3M □□□090C31	414

50 Hz: P_N=2.2 kW
60 Hz: P_N=2.6 kW
87 Hz: P_N=3.9 kW

n_N	1440 r/min		1740 r/min		2550 r/min		M_2 [Nm]	i		
f_N	50 Hz		60 Hz		87 Hz					
P_N	2.2 kW		2.6 kW		3.9 kW					
	n_2 [r/min]	c	n_2 [r/min]	c	n_2 [r/min]	c				
	432	3.5	522	3.4	765	3.0	47	3.333	GFL05-2M □□□100C12	406
	315	2.6	381	2.5	558	2.2	65	4.571	GFL05-2M □□□100C12	406
	281	3.1	339	2.9	497	2.6	73	5.133	GFL05-2M □□□100C12	406
	254	2.9	307	2.8	450	2.4	80	5.667	GFL05-2M □□□100C12	406
	225	1.9	272	1.8	398	1.6	91	6.400	GFL05-2M □□□100C12	406
	205	2.5	247	2.4	362	2.1	100	7.040	GFL05-2M □□□100C12	406
	185	2.4	224	2.2	328	2.0	110	7.771	GFL05-2M □□□100C12	406
	160	2.1	193	2.0	283	1.7	128	9.010	GFL05-2M □□□100C12	406
	145	2.0	175	1.9	256	1.6	141	9.946	GFL05-2M □□□100C12	406
	143	3.2	172	3.1	253	2.7	143	10.092	GFL06-2M □□□100C12	406
	127	1.7	153	1.7	225	1.5	161	11.360	GFL05-2M □□□100C12	406
	113	1.6	136	1.5	199	1.3	181	12.800	GFL05-2M □□□100C12	406
	111	3.2	134	3.1	197	2.7	184	12.978	GFL06-2M □□□100C12	406
	99	1.5	120	1.4	175	1.2	206	14.538	GFL05-2M □□□100C12	406
	98	3.1	118	2.9	173	2.6	209	14.743	GFL06-2M □□□100C12	406
	91	1.4	109	1.3	160	1.2	225	15.904	GFL05-2M □□□100C12	406
	89	2.8	108	2.7	158	2.4	228	16.128	GFL06-2M □□□100C12	406
	80	1.2	97	1.2	142	1.0	254	17.920	GFL05-2M □□□100C12	406
	79	2.3	96	2.2	140	2.0	257	18.169	GFL06-2M □□□100C12	406
	71	1.2	86	1.1	126	1.0	287	20.286	GFL05-2M □□□100C12	406
	70	2.2	85	2.1	124	1.9	291	20.571	GFL06-2M □□□100C12	406
	63	1.0	76	0.9	112	0.8	324	22.857	GFL05-2M □□□100C12	406
	62	1.8	75	1.8	110	1.5	328	23.175	GFL06-2M □□□100C12	406
	58	1.0	70	1.0	103	0.9	352	24.850	GFL05-2M □□□100C12	406
	57	1.8	69	1.8	101	1.7	357	25.200	GFL06-2M □□□100C12	406
	51	1.5	61	1.5	90	1.4	402	28.389	GFL06-2M □□□100C12	406
	51	3.1	62	3.1	91	3.0	396	28.000	GFL07-2M □□□100C12	406
	45	3.0	54	3.0	79	2.9	458	32.344	GFL07-2M □□□100C12	406
	44	1.4	53	1.4	78	1.3	464	32.800	GFL06-2M □□□100C12	406
	40	2.4	48	2.4	70	2.3	516	36.444	GFL07-2M □□□100C12	406
	39	1.2	47	1.2	69	1.1	523	36.951	GFL06-2M □□□100C12	406
	36	2.5	44	2.5	64	2.3	561	39.642	GFL07-2M □□□100C12	406
	35	1.1	43	1.1	63	1.1	578	40.800	GFL06-2M □□□100C12	406
	32	2.0	39	2.0	57	1.9	632	44.667	GFL07-2M □□□100C12	406
	31	0.9	38	0.9	56	0.9	651	45.963	GFL06-2M □□□100C12	406
	28	1.8	33	1.8	49	1.7	737	52.067	GFL07-2M □□□100C12	406
	28	2.8	34	2.8	50	2.6	727	51.333	GFL09-2M □□□100C12	406
	25	1.5	30	1.5	44	1.5	830	58.667	GFL07-2M □□□100C12	406
	25	2.8	30	2.8	44	2.6	819	57.852	GFL09-2M □□□100C12	406
	23	1.4	28	1.4	40	1.3	894	63.190	GFL07-2M □□□100C12	406
	23	1.7	28	1.7	40	1.6	883	63.326	GFL09-3M □□□100C12	414

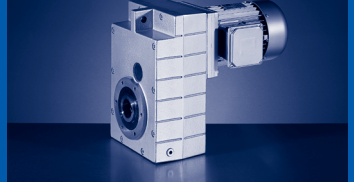

50 Hz: P_N=2.2 kW
60 Hz: P_N=2.6 kW
87 Hz: P_N=3.9 kW

n_N	1440 r/min		1740 r/min		2550 r/min		M_2 [Nm]	i		
f_N	50 Hz		60 Hz		87 Hz					
P_N	2.2 kW		2.6 kW		3.9 kW					
	n_2 [r/min]	c	n_2 [r/min]	c	n_2 [r/min]	c				
	23	2.3	28	2.3	41	2.2	882	62.300	GFL09-2M □□□100C12	406
	23	2.9	28	2.9	40	2.7	894	63.190	GFL11-2M □□□100C12	406
	22	1.0	27	1.0	39	1.0	911	65.306	GFL07-3M □□□100C12	414
	22	3.2	27	3.2	39	3.2	911	65.306	GFL11-3M □□□100C12	414
	21	2.3	25	2.3	36	2.3	994	70.211	GFL09-2M □□□100C12	406
	20	0.9	24	0.9	35	0.9	1010	72.452	GFL07-3M □□□100C12	414
	20	1.3	24	1.3	36	1.3	1008	71.200	GFL07-2M □□□100C12	406
	20	1.5	24	1.5	35	1.5	1020	73.173	GFL09-3M □□□100C12	414
	20	2.8	24	2.8	35	2.8	1023	73.335	GFL11-3M □□□100C12	414
	20	2.9	24	2.9	36	2.9	1008	71.200	GFL11-2M □□□100C12	406
	18	0.9	21	0.9	31	0.9	1138	81.636	GFL07-3M □□□100C12	414
	18	1.5	22	1.5	32	1.5	1115	78.750	GFL09-2M □□□100C12	406
	18	1.5	21	1.5	31	1.5	1150	82.465	GFL09-3M □□□100C12	414
	18	2.3	22	2.3	32	2.3	1131	79.875	GFL11-2M □□□100C12	406
	17	2.8	21	2.8	31	2.8	1152	82.631	GFL11-3M □□□100C12	414
	16	1.4	20	1.4	29	1.4	1256	88.750	GFL09-2M □□□100C12	406
	16	2.3	19	2.3	28	2.3	1274	90.000	GFL11-2M □□□100C12	406
	15	1.3	19	1.3	27	1.3	1301	93.333	GFL09-3M □□□100C12	414
	15	2.5	19	2.5	27	2.5	1304	93.540	GFL11-3M □□□100C12	414
	14	1.3	17	1.3	24	1.3	1467	105.185	GFL09-3M □□□100C12	414
	14	2.5	17	2.5	24	2.5	1470	105.397	GFL11-3M □□□100C12	414
	13	1.2	15	1.2	22	1.2	1594	114.333	GFL09-3M □□□100C12	414
	13	2.2	15	2.2	22	2.2	1598	114.586	GFL11-3M □□□100C12	414
	11	1.2	14	1.2	20	1.2	1797	128.852	GFL09-3M □□□100C12	414
	11	2.2	14	2.2	20	2.2	1800	129.111	GFL11-3M □□□100C12	414
	9.7	1.0	12	1.0	17	1.0	2075	148.815	GFL09-3M □□□100C12	414
	9.7	1.9	12	1.9	17	1.9	2079	149.144	GFL11-3M □□□100C12	414
	8.6	1.0	10	1.0	15	1.0	2338	167.712	GFL09-3M □□□100C12	414
	8.6	1.9	10	1.9	15	1.9	2343	168.049	GFL11-3M □□□100C12	414
	7.9	1.7	9.5	1.7	14	1.7	2549	182.792	GFL11-3M □□□100C12	414
	7.8	0.9	9.4	0.9	14	0.9	2581	185.111	GFL09-3M □□□100C12	414
	7.1	2.8	8.6	2.8	13	2.8	2817	202.074	GFL14-3M □□□100C12	414
	7	1.7	8.5	1.7	12	1.7	2872	205.963	GFL11-3M □□□100C12	414
	6.9	0.9	8.3	0.9	12	0.9	2909	208.617	GFL09-3M □□□100C12	414
	6.4	1.4	7.8	1.4	11	1.4	3132	224.636	GFL11-3M □□□100C12	414
	6.4	2.8	7.8	2.8	11	2.8	3132	224.636	GFL14-3M □□□100C12	414
	5.7	1.4	6.9	1.4	10	1.4	3529	253.111	GFL11-3M □□□100C12	414
	5.7	2.8	6.9	2.8	10	2.8	3529	253.111	GFL14-3M □□□100C12	414
	5.4	1.4	6.5	1.4	9.5	1.4	3726	267.259	GFL11-3M □□□100C12	414
	5.3	2.6	6.4	2.6	9.3	2.6	3817	273.778	GFL14-3M □□□100C12	414
	4.4	1.2	5.3	1.2	7.8	1.2	4567	327.556	GFL11-3M □□□100C12	414

50 Hz: P_N=2.2 kW
60 Hz: P_N=2.6 kW
87 Hz: P_N=3.9 kW

n_N	1440 r/min		1740 r/min		2550 r/min		M_2 [Nm]	i		
f_N	50 Hz		60 Hz		87 Hz					
P_N	2.2 kW		2.6 kW		3.9 kW					
	n_2 [r/min]	c	n_2 [r/min]	c	n_2 [r/min]	c				
	4.3	2.3	5.2	2.3	7.7	2.3	4635	332.444	GFL14-3M □□□100C12	414
	4.1	2.1	4.9	2.1	7.2	2.1	4919	352.811	GFL14-3M □□□100C12	414
	4	1.1	4.9	1.1	7.1	1.1	4993	358.077	GFL11-3M □□□100C12	414
	3.6	1.1	4.3	1.1	6.3	1.1	5625	403.467	GFL11-3M □□□100C12	414
	3.6	2.1	4.4	2.1	6.4	2.1	5543	397.533	GFL14-3M □□□100C12	414
	3.4	1.0	4	1.0	5.9	1.0	5998	430.222	GFL11-3M □□□100C12	414
	3.4	1.8	4	1.8	5.9	1.8	5998	430.222	GFL14-3M □□□100C12	414
	2.8	0.8	3.3	0.8	4.9	0.8	7280	522.133	GFL11-3M □□□100C12	414
	2.8	1.5	3.3	1.5	4.9	1.5	7280	522.133	GFL14-3M □□□100C12	414
	2.6	1.2	3.1	1.2	4.5	1.2	7841	562.391	GFL14-3M □□□100C12	414
	2.3	1.1	2.8	1.1	4	1.1	8835	633.680	GFL14-3M □□□100C12	414
	1.8	0.9	2.2	0.9	3.2	0.9	11168	801.000	GFL14-3M □□□100C12	414

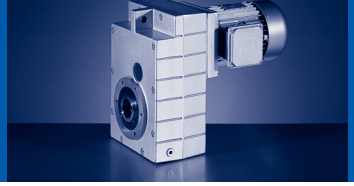

50 Hz: P_N=3.0 kW
60 Hz: P_N=3.6 kW

n_N	2890 r/min		3490 r/min				M_2 [Nm]	i		
f_N	50 Hz		60 Hz							
P_N	3.0 kW		3.6 kW							
	n_2 [r/min]	c	n_2 [r/min]	c						
	867	4.2	1047	3.9			32	3.333	GFL05-2M □□□100C31	406
	632	3.1	763	2.9			44	4.571	GFL05-2M □□□100C31	406
	563	3.6	680	3.4			49	5.133	GFL05-2M □□□100C31	406
	510	3.4	616	3.2			55	5.667	GFL05-2M □□□100C31	406
	452	2.3	545	2.1			62	6.400	GFL05-2M □□□100C31	406
	411	2.9	496	2.8			68	7.040	GFL05-2M □□□100C31	406
	372	2.8	449	2.6			75	7.771	GFL05-2M □□□100C31	406
	321	2.5	387	2.3			87	9.010	GFL05-2M □□□100C31	406
	291	2.3	351	2.2			96	9.946	GFL05-2M □□□100C31	406
	254	2.1	307	1.9			109	11.360	GFL05-2M □□□100C31	406
	226	1.9	273	1.8			123	12.800	GFL05-2M □□□100C31	406
	199	1.7	240	1.6			140	14.538	GFL05-2M □□□100C31	406
	182	1.6	219	1.5			153	15.904	GFL05-2M □□□100C31	406
	161	1.5	195	1.4			172	17.920	GFL05-2M □□□100C31	406
	159	2.8	192	2.6			175	18.169	GFL06-2M □□□100C31	406
	143	1.4	172	1.3			195	20.286	GFL05-2M □□□100C31	406
	141	2.6	170	2.5			198	20.571	GFL06-2M □□□100C31	406
	126	1.1	153	1.1			220	22.857	GFL05-2M □□□100C31	406
	125	2.2	151	2.0			223	23.175	GFL06-2M □□□100C31	406
	116	1.3	140	1.2			239	24.850	GFL05-2M □□□100C31	406
	115	2.5	139	2.3			242	25.200	GFL06-2M □□□100C31	406
	103	1.1	125	1.0			269	28.000	GFL05-2M □□□100C31	406
	102	2.0	123	1.9			273	28.389	GFL06-2M □□□100C31	406
	88	1.9	106	1.7			316	32.800	GFL06-2M □□□100C31	406
	79	3.3	96	3.1			351	36.444	GFL07-2M □□□100C31	406
	78	1.6	95	1.5			355	36.951	GFL06-2M □□□100C31	406
	71	1.5	86	1.4			392	40.800	GFL06-2M □□□100C31	406
	65	2.7	78	2.5			430	44.667	GFL07-2M □□□100C31	406
	63	1.3	76	1.2			442	45.963	GFL06-2M □□□100C31	406
	56	2.5	67	2.3			501	52.067	GFL07-2M □□□100C31	406
	49	2.1	60	1.9			564	58.667	GFL07-2M □□□100C31	406
	46	1.9	55	1.8			608	63.190	GFL07-2M □□□100C31	406
	46	2.3	55	2.2			600	63.326	GFL09-3M □□□100C31	414
	46	3.1	56	2.9			599	62.300	GFL09-2M □□□100C31	406
	44	1.4	53	1.4			619	65.306	GFL07-3M □□□100C31	414
	41	1.9	49	1.8			685	71.200	GFL07-2M □□□100C31	406
	40	1.3	48	1.2			686	72.452	GFL07-3M □□□100C31	414
	40	2.2	48	2.1			693	73.173	GFL09-3M □□□100C31	414
	37	2.2	44	2.1			757	78.750	GFL09-2M □□□100C31	406
	35	1.3	43	1.2			773	81.636	GFL07-3M □□□100C31	414
	35	2.2	42	2.1			781	82.465	GFL09-3M □□□100C31	414

50 Hz: P_N=3.0 kW
60 Hz: P_N=3.6 kW

n_N	2890 r/min		3490 r/min				M_2 [Nm]	i		
f_N	50 Hz		60 Hz							
P_N	3.0 kW		3.6 kW							
	n_2 [r/min]	c	n_2 [r/min]	c						
	33	2.1	39	2.0			854	88.750	GFL09-2M □□□100C31	406
	31	1.1	38	1.0			876	92.413	GFL07-3M □□□100C31	414
	31	1.9	37	1.8			884	93.333	GFL09-3M □□□100C31	414
	28	1.1	34	1.0			986	104.127	GFL07-3M □□□100C31	414
	28	1.9	33	1.8			997	105.185	GFL09-3M □□□100C31	414
	26	1.0	31	0.9			1072	113.206	GFL07-3M □□□100C31	414
	25	1.7	31	1.6			1083	114.333	GFL09-3M □□□100C31	414
	25	3.2	31	3.1			1086	114.586	GFL11-3M □□□100C31	414
	23	1.0	27	0.9			1208	127.556	GFL07-3M □□□100C31	414
	22	1.7	27	1.6			1221	128.852	GFL09-3M □□□100C31	414
	22	3.2	27	3.1			1223	129.111	GFL11-3M □□□100C31	414
	19	1.5	24	1.4			1410	148.815	GFL09-3M □□□100C31	414
	19	2.8	23	2.6			1413	149.144	GFL11-3M □□□100C31	414
	17	1.5	21	1.4			1589	167.712	GFL09-3M □□□100C31	414
	17	2.8	21	2.6			1592	168.049	GFL11-3M □□□100C31	414
	16	1.3	19	1.2			1754	185.111	GFL09-3M □□□100C31	414
	16	2.4	19	2.3			1732	182.792	GFL11-3M □□□100C31	414
	14	1.3	17	1.2			1976	208.617	GFL09-3M □□□100C31	414
	14	2.4	17	2.3			1951	205.963	GFL11-3M □□□100C31	414
	13	1.1	16	1.1			2129	224.778	GFL09-3M □□□100C31	414
	13	2.1	16	2.0			2128	224.636	GFL11-3M □□□100C31	414
	11	1.1	14	1.1			2400	253.321	GFL09-3M □□□100C31	414
	11	2.0	13	1.9			2532	267.259	GFL11-3M □□□100C31	414
	11	2.1	14	2.0			2398	253.111	GFL11-3M □□□100C31	414
	8.8	1.8	11	1.7			3103	327.556	GFL11-3M □□□100C31	414
	8.2	3.1	9.9	3.0			3342	352.811	GFL14-3M □□□100C31	414
	8.1	1.6	9.8	1.5			3392	358.077	GFL11-3M □□□100C31	414
	7.3	3.1	8.8	2.9			3766	397.533	GFL14-3M □□□100C31	414
	7.2	1.6	8.7	1.5			3822	403.467	GFL11-3M □□□100C31	414
	6.7	1.5	8.1	1.4			4076	430.222	GFL11-3M □□□100C31	414
	6.7	2.6	8.1	2.5			4076	430.222	GFL14-3M □□□100C31	414
	5.5	1.2	6.7	1.1			4946	522.133	GFL11-3M □□□100C31	414
	5.5	2.1	6.7	2.0			4946	522.133	GFL14-3M □□□100C31	414
	5.1	1.0	6.2	1.0			5328	562.391	GFL11-3M □□□100C31	414
	5.1	1.7	6.2	1.6			5328	562.391	GFL14-3M □□□100C31	414
	4.6	1.0	5.5	0.9			6003	633.680	GFL11-3M □□□100C31	414
	4.6	1.6	5.5	1.6			6003	633.680	GFL14-3M □□□100C31	414
	3.6	1.3	4.4	1.2			7588	801.000	GFL14-3M □□□100C31	414

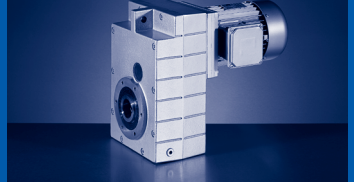

50 Hz: P_N=3.0 kW
60 Hz: P_N=3.6 kW
87 Hz: P_N=5.4 kW

n_N	1430 r/min		1730 r/min		2540 r/min		M_2 [Nm]	i		
f_N	50 Hz		60 Hz		87 Hz					
P_N	3.0 kW		3.6 kW		5.4 kW					
	n_2 [r/min]	c	n_2 [r/min]	c	n_2 [r/min]	c				
	429	2.6	519	2.4	762	2.2	65	3.333	GFL05-2M □□□100C32	406
	313	1.9	378	1.8	556	1.6	89	4.571	GFL05-2M □□□100C32	406
	279	2.2	337	2.1	495	1.9	100	5.133	GFL05-2M □□□100C32	406
	252	2.1	305	2.0	448	1.8	110	5.667	GFL05-2M □□□100C32	406
	223	1.4	270	1.3	397	1.2	124	6.400	GFL05-2M □□□100C32	406
	222	2.8	268	2.7	394	2.4	125	6.450	GFL06-2M □□□100C32	406
	203	1.8	246	1.7	361	1.5	137	7.040	GFL05-2M □□□100C32	406
	200	3.1	242	3.0	355	2.6	139	7.147	GFL06-2M □□□100C32	406
	184	1.7	223	1.6	327	1.4	151	7.771	GFL05-2M □□□100C32	406
	159	1.5	192	1.5	282	1.3	175	9.010	GFL05-2M □□□100C32	406
	151	3.2	183	3.0	268	2.7	184	9.463	GFL06-2M □□□100C32	406
	144	1.4	174	1.4	255	1.2	193	9.946	GFL05-2M □□□100C32	406
	142	2.3	171	2.2	252	2.0	196	10.092	GFL06-2M □□□100C32	406
	126	1.3	152	1.2	224	1.1	221	11.360	GFL05-2M □□□100C32	406
	124	2.8	150	2.7	221	2.4	224	11.520	GFL06-2M □□□100C32	406
	112	1.1	135	1.1	198	1.0	249	12.800	GFL05-2M □□□100C32	406
	110	2.4	133	2.2	196	2.0	252	12.978	GFL06-2M □□□100C32	406
	98	1.1	119	1.0	175	0.9	283	14.538	GFL05-2M □□□100C32	406
	97	2.2	117	2.1	172	1.9	287	14.743	GFL06-2M □□□100C32	406
	90	1.0	109	1.0	160	0.8	309	15.904	GFL05-2M □□□100C32	406
	89	2.1	107	2.0	158	1.7	314	16.128	GFL06-2M □□□100C32	406
	80	0.9	97	0.9			348	17.920	GFL05-2M □□□100C32	406
	79	1.7	95	1.6	140	1.4	353	18.169	GFL06-2M □□□100C32	406
	71	0.8	85	0.8			394	20.286	GFL05-2M □□□100C32	406
	71	3.2	85	3.1	125	2.7	394	20.286	GFL07-2M □□□100C32	406
	70	1.6	84	1.5	124	1.4	400	20.571	GFL06-2M □□□100C32	406
	63	2.8	76	2.7	111	2.3	444	22.857	GFL07-2M □□□100C32	406
	62	1.3	75	1.3	110	1.1	450	23.175	GFL06-2M □□□100C32	406
	58	2.8	70	2.8	102	2.6	483	24.850	GFL07-2M □□□100C32	406
	57	1.3	69	1.3	101	1.3	490	25.200	GFL06-2M □□□100C32	406
	51	2.3	62	2.3	91	2.2	544	28.000	GFL07-2M □□□100C32	406
	50	1.1	61	1.1	90	1.1	552	28.389	GFL06-2M □□□100C32	406
	44	1.0	53	1.0	77	1.0	638	32.800	GFL06-2M □□□100C32	406
	44	2.2	54	2.2	79	2.1	629	32.344	GFL07-2M □□□100C32	406
	44	3.0	53	3.0	78	2.8	635	32.667	GFL09-2M □□□100C32	406
	39	0.9	47	0.9	69	0.8	718	36.951	GFL06-2M □□□100C32	406
	39	1.8	48	1.8	70	1.7	708	36.444	GFL07-2M □□□100C32	406
	39	3.0	47	3.0	69	2.8	716	36.815	GFL09-2M □□□100C32	406
	36	1.8	44	1.8	64	1.7	771	39.642	GFL07-2M □□□100C32	406
	36	2.5	44	2.5	64	2.4	771	39.667	GFL09-2M □□□100C32	406
	35	0.8	42	0.8			793	40.800	GFL06-2M □□□100C32	406

50 Hz: P_N=3.0 kW
60 Hz: P_N=3.6 kW
87 Hz: P_N=5.4 kW

n_N	1430 r/min		1730 r/min		2540 r/min		M_2 [Nm]	i		
f_N	50 Hz		60 Hz		87 Hz					
P_N	3.0 kW		3.6 kW		5.4 kW					
	n_2 [r/min]	c	n_2 [r/min]	c	n_2 [r/min]	c				
	32	1.5	39	1.5	57	1.4	868	44.667	GFL07-2M □□□100C32	406
	32	2.5	39	2.5	57	2.4	869	44.704	GFL09-2M □□□100C32	406
	28	1.3	33	1.3	49	1.3	1012	52.067	GFL07-2M □□□100C32	406
	28	2.0	34	2.0	50	1.9	998	51.333	GFL09-2M □□□100C32	406
	28	2.5	33	2.5	49	2.4	1012	52.067	GFL11-2M □□□100C32	406
	25	2.0	30	2.0	44	1.9	1125	57.852	GFL09-2M □□□100C32	406
	24	1.1	30	1.1	43	1.1	1140	58.667	GFL07-2M □□□100C32	406
	24	2.5	30	2.5	43	2.4	1140	58.667	GFL11-2M □□□100C32	406
	23	1.0	27	1.0	40	1.0	1228	63.190	GFL07-2M □□□100C32	406
	23	1.3	27	1.3	40	1.2	1212	63.326	GFL09-3M □□□100C32	414
	23	1.7	28	1.7	41	1.6	1211	62.300	GFL09-2M □□□100C32	406
	23	2.1	27	2.1	40	2.0	1228	63.190	GFL11-2M □□□100C32	406
	22	2.3	27	2.3	39	2.3	1250	65.306	GFL11-3M □□□100C32	414
	20	0.9	24	0.9	36	0.9	1384	71.200	GFL07-2M □□□100C32	406
	20	1.1	24	1.1	35	1.1	1401	73.173	GFL09-3M □□□100C32	414
	20	1.7	25	1.7	36	1.7	1365	70.211	GFL09-2M □□□100C32	406
	20	2.1	24	2.1	36	2.1	1384	71.200	GFL11-2M □□□100C32	406
	20	2.1	24	2.1	35	2.1	1404	73.335	GFL11-3M □□□100C32	414
	18	1.1	22	1.1	32	1.1	1531	78.750	GFL09-2M □□□100C32	406
	18	1.7	22	1.7	32	1.7	1553	79.875	GFL11-2M □□□100C32	406
	17	1.1	21	1.1	31	1.1	1579	82.465	GFL09-3M □□□100C32	414
	17	2.1	21	2.1	31	2.1	1582	82.631	GFL11-3M □□□100C32	414
	16	1.0	20	1.0	29	1.0	1725	88.750	GFL09-2M □□□100C32	406
	16	1.7	19	1.7	28	1.7	1749	90.000	GFL11-2M □□□100C32	406
	15	1.0	19	1.0	27	1.0	1787	93.333	GFL09-3M □□□100C32	414
	15	1.8	19	1.8	27	1.8	1791	93.540	GFL11-3M □□□100C32	414
	14	1.0	16	1.0	24	1.0	2014	105.185	GFL09-3M □□□100C32	414
	14	1.8	16	1.8	24	1.8	2018	105.397	GFL11-3M □□□100C32	414
	14	3.0	17	3.0	24	3.0	2008	104.889	GFL14-3M □□□100C32	414
	13	0.8	15	0.8	22	0.8	2189	114.333	GFL09-3M □□□100C32	414
	13	1.6	15	1.6	22	1.6	2194	114.586	GFL11-3M □□□100C32	414
	13	3.0	15	3.0	22	3.0	2185	114.126	GFL14-3M □□□100C32	414
	11	0.8	13	0.8	20	0.8	2467	128.852	GFL09-3M □□□100C32	414
	11	1.6	13	1.6	20	1.6	2472	129.111	GFL11-3M □□□100C32	414
	11	3.0	14	3.0	20	3.0	2462	128.593	GFL14-3M □□□100C32	414
	9.6	1.4	12	1.4	17	1.4	2855	149.144	GFL11-3M □□□100C32	414
	9.2	2.5	11	2.5	16	2.5	2990	156.148	GFL14-3M □□□100C32	414
	8.5	1.4	10	1.4	15	1.4	3217	168.049	GFL11-3M □□□100C32	414
	8.4	2.6	10	2.6	15	2.6	3256	170.074	GFL14-3M □□□100C32	414
	7.8	1.2	9.5	1.2	14	1.2	3500	182.792	GFL11-3M □□□100C32	414
	7.1	2.0	8.6	2.0	13	2.0	3869	202.074	GFL14-3M □□□100C32	414

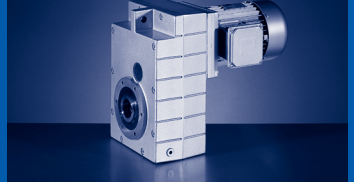

50 Hz: P_N=3.0 kW
60 Hz: P_N=3.6 kW
87 Hz: P_N=5.4 kW

n_N	1430 r/min		1730 r/min		2540 r/min		M_2 [Nm]	i		
f_N	50 Hz		60 Hz		87 Hz					
P_N	3.0 kW		3.6 kW		5.4 kW					
	n_2 [r/min]	c	n_2 [r/min]	c	n_2 [r/min]	c				
	6.9	1.2	8.4	1.2	12	1.2	3943	205.963	GFL11-3M □□□100C32	414
	6.4	1.1	7.7	1.1	11	1.1	4301	224.636	GFL11-3M □□□100C32	414
	6.4	2.0	7.7	2.0	11	2.0	4301	224.636	GFL14-3M □□□100C32	414
	5.7	1.1	6.8	1.1	10	1.1	4846	253.111	GFL11-3M □□□100C32	414
	5.7	2.0	6.8	2.0	10	2.0	4846	253.111	GFL14-3M □□□100C32	414
	5.4	1.0	6.5	1.0	9.5	1.0	5117	267.259	GFL11-3M □□□100C32	414
	5.2	1.9	6.3	1.9	9.3	1.9	5242	273.778	GFL14-3M □□□100C32	414
	4.4	0.9	5.3	0.9	7.8	0.9	6271	327.556	GFL11-3M □□□100C32	414
	4.3	1.7	5.2	1.7	7.6	1.7	6365	332.444	GFL14-3M □□□100C32	414
	4.1	1.5	4.9	1.5	7.2	1.5	6755	352.811	GFL14-3M □□□100C32	414
	3.6	1.5	4.4	1.5	6.4	1.5	7611	397.533	GFL14-3M □□□100C32	414
	3.3	1.3	4	1.3	5.9	1.3	8237	430.222	GFL14-3M □□□100C32	414
	2.7	1.1	3.3	1.1	4.9	1.1	9997	522.133	GFL14-3M □□□100C32	414
	2.5	0.8	3.1	0.8	4.5	0.8	10767	562.391	GFL14-3M □□□100C32	414
	2.3	0.8	2.7	0.8	4	0.8	12132	633.680	GFL14-3M □□□100C32	414

50 Hz: P_N=4.0 kW
60 Hz: P_N=4.8 kW

n_N	2840 r/min		3440 r/min				M_2 [Nm]	i		
f_N	50 Hz		60 Hz							
P_N	4.0 kW		4.8 kW							
	n_2 [r/min]	c	n_2 [r/min]	c						
	852	3.1	1032	2.9			44	3.333	GFL05-2M □□□100C41	406
	621	2.3	753	2.2			60	4.571	GFL05-2M □□□100C41	406
	553	2.7	670	2.5			67	5.133	GFL05-2M □□□100C41	406
	501	2.5	607	2.4			74	5.667	GFL05-2M □□□100C41	406
	444	1.7	538	1.6			84	6.400	GFL05-2M □□□100C41	406
	403	2.2	489	2.1			92	7.040	GFL05-2M □□□100C41	406
	365	2.1	443	1.9			101	7.771	GFL05-2M □□□100C41	406
	315	1.8	382	1.7			118	9.010	GFL05-2M □□□100C41	406
	286	1.7	346	1.6			130	9.946	GFL05-2M □□□100C41	406
	281	2.8	341	2.6			132	10.092	GFL06-2M □□□100C41	406
	250	1.5	303	1.4			148	11.360	GFL05-2M □□□100C41	406
	222	1.4	269	1.3			167	12.800	GFL05-2M □□□100C41	406
	219	2.8	265	2.7			169	12.978	GFL06-2M □□□100C41	406
	195	1.3	237	1.2			190	14.538	GFL05-2M □□□100C41	406
	193	2.7	233	2.5			192	14.743	GFL06-2M □□□100C41	406
	179	1.2	216	1.1			208	15.904	GFL05-2M □□□100C41	406
	176	2.5	213	2.3			211	16.128	GFL06-2M □□□100C41	406
	159	1.1	192	1.0			234	17.920	GFL05-2M □□□100C41	406
	156	2.0	189	1.9			237	18.169	GFL06-2M □□□100C41	406
	140	1.0	170	1.0			265	20.286	GFL05-2M □□□100C41	406
	138	1.9	167	1.8			268	20.571	GFL06-2M □□□100C41	406
	124	0.9					298	22.857	GFL05-2M □□□100C41	406
	123	1.6	148	1.5			302	23.175	GFL06-2M □□□100C41	406
	114	1.0	138	0.9			324	24.850	GFL05-2M □□□100C41	406
	113	1.8	137	1.7			329	25.200	GFL06-2M □□□100C41	406
	101	3.1	123	2.9			365	28.000	GFL07-2M □□□100C41	406
	100	1.5	121	1.4			371	28.389	GFL06-2M □□□100C41	406
	88	3.0	106	2.8			422	32.344	GFL07-2M □□□100C41	406
	87	1.4	105	1.3			428	32.800	GFL06-2M □□□100C41	406
	78	2.4	94	2.3			476	36.444	GFL07-2M □□□100C41	406
	77	1.2	93	1.1			482	36.951	GFL06-2M □□□100C41	406
	72	2.5	87	2.3			517	39.642	GFL07-2M □□□100C41	406
	70	1.1	84	1.1			532	40.800	GFL06-2M □□□100C41	406
	64	2.0	77	1.9			583	44.667	GFL07-2M □□□100C41	406
	62	0.9	75	0.9			600	45.963	GFL06-2M □□□100C41	406
	55	1.8	66	1.7			679	52.067	GFL07-2M □□□100C41	406
	55	2.8	67	2.6			670	51.333	GFL09-2M □□□100C41	406
	49	2.8	60	2.6			755	57.852	GFL09-2M □□□100C41	406
	48	1.5	59	1.4			766	58.667	GFL07-2M □□□100C41	406
	46	2.3	55	2.2			813	62.300	GFL09-2M □□□100C41	406
	45	1.4	54	1.3			825	63.190	GFL07-2M □□□100C41	406

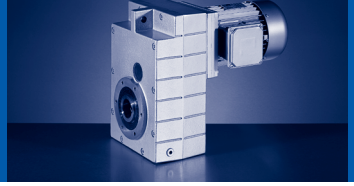

50 Hz: P_N=4.0 kW
60 Hz: P_N=4.8 kW

n_N	2840 r/min		3440 r/min				M_2 [Nm]	i		
f_N	50 Hz		60 Hz							
P_N	4.0 kW		4.8 kW							
	n_2 [r/min]	c	n_2 [r/min]	c						
	45	1.7	54	1.6			814	63.326	GFL09-3M □□□100C41	414
	45	2.9	54	2.7			825	63.190	GFL11-2M □□□100C41	406
	44	1.1	53	1.0			839	65.306	GFL07-3M □□□100C41	414
	40	1.4	48	1.3			929	71.200	GFL07-2M □□□100C41	406
	40	2.5	49	2.4			916	70.211	GFL09-2M □□□100C41	406
	40	3.1	48	3.0			929	71.200	GFL11-2M □□□100C41	406
	39	0.9	48	0.9			931	72.452	GFL07-3M □□□100C41	414
	39	1.6	47	1.5			941	73.173	GFL09-3M □□□100C41	414
	39	3.1	47	2.9			943	73.335	GFL11-3M □□□100C41	414
	36	1.6	44	1.5			1028	78.750	GFL09-2M □□□100C41	406
	36	2.5	43	2.4			1042	79.875	GFL11-2M □□□100C41	406
	35	0.9	42	0.9			1049	81.636	GFL07-3M □□□100C41	414
	34	1.6	42	1.5			1060	82.465	GFL09-3M □□□100C41	414
	34	3.1	42	2.9			1062	82.631	GFL11-3M □□□100C41	414
	32	1.5	39	1.5			1158	88.750	GFL09-2M □□□100C41	406
	32	2.5	38	2.4			1174	90.000	GFL11-2M □□□100C41	406
	31	0.8					1188	92.413	GFL07-3M □□□100C41	414
	30	1.4	37	1.4			1200	93.333	GFL09-3M □□□100C41	414
	30	2.7	37	2.6			1202	93.540	GFL11-3M □□□100C41	414
	27	0.8					1338	104.127	GFL07-3M □□□100C41	414
	27	1.4	33	1.4			1352	105.185	GFL09-3M □□□100C41	414
	27	2.7	33	2.6			1355	105.397	GFL11-3M □□□100C41	414
	25	1.3	30	1.2			1470	114.333	GFL09-3M □□□100C41	414
	25	2.4	30	2.3			1473	114.586	GFL11-3M □□□100C41	414
	22	1.3	27	1.2			1656	128.852	GFL09-3M □□□100C41	414
	22	2.4	27	2.3			1660	129.111	GFL11-3M □□□100C41	414
	19	1.1	23	1.0			1913	148.815	GFL09-3M □□□100C41	414
	19	2.0	23	1.9			1917	149.144	GFL11-3M □□□100C41	414
	17	1.1	21	1.0			2156	167.712	GFL09-3M □□□100C41	414
	17	2.0	21	1.9			2160	168.049	GFL11-3M □□□100C41	414
	16	1.8	19	1.7			2350	182.792	GFL11-3M □□□100C41	414
	15	0.9	19	0.9			2379	185.111	GFL09-3M □□□100C41	414
	14	0.9	17	0.9			2682	208.617	GFL09-3M □□□100C41	414
	14	1.8	17	1.7			2647	205.963	GFL11-3M □□□100C41	414
	14	3.0	17	2.9			2597	202.074	GFL14-3M □□□100C41	414
	13	0.8					2889	224.778	GFL09-3M □□□100C41	414
	13	1.6	15	1.5			2887	224.636	GFL11-3M □□□100C41	414
	13	3.0	15	2.9			2887	224.636	GFL14-3M □□□100C41	414
	11	0.8					3256	253.321	GFL09-3M □□□100C41	414
	11	1.5	13	1.4			3435	267.259	GFL11-3M □□□100C41	414
	11	1.6	14	1.5			3253	253.111	GFL11-3M □□□100C41	414

50 Hz: P_N=4.0 kW
60 Hz: P_N=4.8 kW

n_N	2840 r/min		3440 r/min				M_2 [Nm]	i		
f_N	50 Hz		60 Hz							
P_N	4.0 kW		4.8 kW							
	n_2 [r/min]	c	n_2 [r/min]	c						
	11	3.0	14	2.9			3253	253.111	GFL14-3M □□□100C41	414
	10	2.8	13	2.7			3519	273.778	GFL14-3M □□□100C41	414
	8.7	1.3	11	1.3			4210	327.556	GFL11-3M □□□100C41	414
	8.5	2.5	10	2.4			4273	332.444	GFL14-3M □□□100C41	414
	8.1	2.3	9.8	2.2			4535	352.811	GFL14-3M □□□100C41	414
	7.9	1.2	9.6	1.1			4603	358.077	GFL11-3M □□□100C41	414
	7.1	2.3	8.7	2.2			5110	397.533	GFL14-3M □□□100C41	414
	7	1.2	8.5	1.1			5186	403.467	GFL11-3M □□□100C41	414
	6.6	1.1	8	1.0			5530	430.222	GFL11-3M □□□100C41	414
	6.6	1.9	8	1.8			5530	430.222	GFL14-3M □□□100C41	414
	5.4	0.9	6.6	0.9			6711	522.133	GFL11-3M □□□100C41	414
	5.4	1.6	6.6	1.5			6711	522.133	GFL14-3M □□□100C41	414
	5.1	1.3	6.1	1.2			7229	562.391	GFL14-3M □□□100C41	414
	4.5	1.2	5.4	1.2			8145	633.680	GFL14-3M □□□100C41	414
	3.6	1.0	4.3	0.9			10296	801.000	GFL14-3M □□□100C41	414

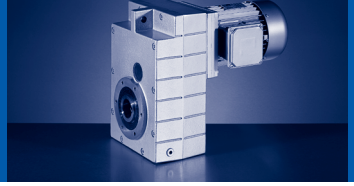

50 Hz: P_N=4.0 kW
60 Hz: P_N=4.8 kW
87 Hz: P_N=7.1 kW

n_N	1450 r/min		1750 r/min		2560 r/min		M_2 [Nm]	i		
f_N	50 Hz		60 Hz		87 Hz					
P_N	4.0 kW		4.8 kW		7.1 kW					
	n_2 [r/min]	c	n_2 [r/min]	c	n_2 [r/min]	c				
	395	3.4	476	3.2	697	2.9	94	3.675	GFL06-2M □□□112C22	406
	312	4.2	377	4.0	551	3.5	119	4.643	GFL07-2M □□□112C22	406
	278	3.2	336	3.0	491	2.7	133	5.211	GFL06-2M □□□112C22	406
	252	3.0	304	2.9	445	2.5	147	5.750	GFL06-2M □□□112C22	406
	225	2.1	271	2.0	397	1.8	165	6.450	GFL06-2M □□□112C22	406
	203	2.4	245	2.3	358	2.0	183	7.147	GFL06-2M □□□112C22	406
	173	2.8	208	2.7	305	2.4	215	8.400	GFL06-2M □□□112C22	406
	153	2.4	185	2.3	271	2.0	242	9.463	GFL06-2M □□□112C22	406
	144	1.8	173	1.7	254	1.5	258	10.092	GFL06-2M □□□112C22	406
	126	2.2	152	2.0	222	1.8	294	11.520	GFL06-2M □□□112C22	406
	112	1.8	135	1.7	197	1.5	332	12.978	GFL06-2M □□□112C22	406
	102	3.2	123	3.0	180	2.6	363	14.200	GFL07-2M □□□112C22	406
	98	1.7	119	1.6	174	1.4	377	14.743	GFL06-2M □□□112C22	406
	91	2.9	110	2.8	161	2.4	407	15.904	GFL07-2M □□□112C22	406
	90	1.6	109	1.5	159	1.3	412	16.128	GFL06-2M □□□112C22	406
	81	2.6	98	2.5	143	2.2	458	17.920	GFL07-2M □□□112C22	406
	80	1.3	96	1.2	141	1.1	464	18.169	GFL06-2M □□□112C22	406
	72	2.4	86	2.3	126	2.0	519	20.286	GFL07-2M □□□112C22	406
	71	1.2	85	1.2	124	1.0	526	20.571	GFL06-2M □□□112C22	406
	63	1.0	76	1.0	111	0.9	592	23.175	GFL06-2M □□□112C22	406
	63	2.1	77	2.0	112	1.8	584	22.857	GFL07-2M □□□112C22	406
	58	1.0	69	1.0	102	1.0	644	25.200	GFL06-2M □□□112C22	406
	58	2.1	70	2.1	103	2.0	635	24.850	GFL07-2M □□□112C22	406
	52	1.7	63	1.7	91	1.7	716	28.000	GFL07-2M □□□112C22	406
	51	0.8	62	0.8			726	28.389	GFL06-2M □□□112C22	406
	45	1.7	54	1.7	79	1.6	827	32.344	GFL07-2M □□□112C22	406
	44	2.6	54	2.6	78	2.4	835	32.667	GFL09-2M □□□112C22	406
	44	3.2	54	3.2	78	3.1	837	32.739	GFL11-2M □□□112C22	406
	40	1.3	48	1.3	70	1.3	932	36.444	GFL07-2M □□□112C22	406
	39	2.6	48	2.6	70	2.4	941	36.815	GFL09-2M □□□112C22	406
	39	3.2	47	3.2	69	3.1	943	36.889	GFL11-2M □□□112C22	406
	37	1.4	44	1.4	65	1.3	1013	39.642	GFL07-2M □□□112C22	406
	37	2.2	44	2.2	65	2.1	1014	39.667	GFL09-2M □□□112C22	406
	36	2.7	44	2.7	64	2.6	1028	40.233	GFL11-2M □□□112C22	406
	33	1.1	39	1.1	57	1.1	1142	44.667	GFL07-2M □□□112C22	406
	32	2.2	39	2.2	57	2.1	1143	44.704	GFL09-2M □□□112C22	406
	32	2.7	39	2.7	57	2.6	1159	45.333	GFL11-2M □□□112C22	406
	28	1.8	34	1.8	50	1.7	1312	51.333	GFL09-2M □□□112C22	406
	28	2.2	34	2.2	49	2.1	1331	52.067	GFL11-2M □□□112C22	406
	28	2.7	34	2.7	49	2.6	1331	52.067	GFL14-2M □□□112C22	406
	25	1.8	30	1.8	44	1.7	1479	57.852	GFL09-2M □□□112C22	406

50 Hz: P_N=4.0 kW
60 Hz: P_N=4.8 kW
87 Hz: P_N=7.1 kW

n_N	1450 r/min		1750 r/min		2560 r/min		M_2 [Nm]	i		
f_N	50 Hz		60 Hz		87 Hz					
P_N	4.0 kW		4.8 kW		7.1 kW					
	n_2 [r/min]	c	n_2 [r/min]	c	n_2 [r/min]	c				
	25	2.2	30	2.2	44	2.1	1499	58.667	GFL11-2M □□□112C22	406
	25	2.7	30	2.7	44	2.6	1499	58.667	GFL14-2M □□□112C22	406
	23	1.0	28	1.0	40	0.9	1594	63.326	GFL09-3M □□□112C22	414
	23	1.5	28	1.5	41	1.4	1592	62.300	GFL09-2M □□□112C22	406
	23	1.8	28	1.8	41	1.7	1615	63.190	GFL11-2M □□□112C22	406
	23	2.3	28	2.3	41	2.2	1615	63.190	GFL14-2M □□□112C22	406
	22	1.8	27	1.8	39	1.8	1644	65.306	GFL11-3M □□□112C22	414
	21	1.4	25	1.4	37	1.4	1795	70.211	GFL09-2M □□□112C22	406
	21	3.1	26	3.1	37	3.1	1730	68.708	GFL14-3M □□□112C22	414
	20	0.8	24	0.8	35	0.8	1842	73.173	GFL09-3M □□□112C22	414
	20	1.6	24	1.6	35	1.6	1846	73.335	GFL11-3M □□□112C22	414
	20	1.8	25	1.8	36	1.8	1820	71.200	GFL11-2M □□□112C22	406
	20	2.3	25	2.3	36	2.3	1820	71.200	GFL14-2M □□□112C22	406
	19	3.1	23	3.1	33	3.1	1949	77.418	GFL14-3M □□□112C22	414
	18	0.8	21	0.8	31	0.8	2076	82.465	GFL09-3M □□□112C22	414
	18	1.5	22	1.5	32	1.5	2042	79.875	GFL11-2M □□□112C22	406
	18	1.6	21	1.6	31	1.6	2080	82.631	GFL11-3M □□□112C22	414
	18	1.8	22	1.8	32	1.8	2042	79.875	GFL14-2M □□□112C22	406
	17	2.9	21	2.9	30	2.9	2141	85.037	GFL14-3M □□□112C22	414
	16	1.4	19	1.4	27	1.4	2355	93.540	GFL11-3M □□□112C22	414
	16	1.5	19	1.5	28	1.5	2300	90.000	GFL11-2M □□□112C22	406
	16	1.8	19	1.8	28	1.8	2300	90.000	GFL14-2M □□□112C22	406
	14	1.4	17	1.4	24	1.4	2653	105.397	GFL11-3M □□□112C22	414
	14	2.6	17	2.6	24	2.6	2641	104.889	GFL14-3M □□□112C22	414
	13	1.2	15	1.2	22	1.2	2885	114.586	GFL11-3M □□□112C22	414
	13	2.3	15	2.3	22	2.3	2873	114.126	GFL14-3M □□□112C22	414
	11	1.2	14	1.2	20	1.2	3250	129.111	GFL11-3M □□□112C22	414
	11	2.1	13	2.1	19	2.1	3446	136.889	GFL14-3M □□□112C22	414
	11	2.3	14	2.3	20	2.3	3237	128.593	GFL14-3M □□□112C22	414
	9.7	1.0	12	1.0	17	1.0	3755	149.144	GFL11-3M □□□112C22	414
	9.3	2.1	11	2.1	16	2.1	3931	156.148	GFL14-3M □□□112C22	414
	8.6	1.0	10	1.0	15	1.0	4231	168.049	GFL11-3M □□□112C22	414
	8.5	2.0	10	2.0	15	2.0	4282	170.074	GFL14-3M □□□112C22	414
	7.9	0.9	9.6	0.9	14	0.9	4602	182.792	GFL11-3M □□□112C22	414
	7.2	1.8	8.7	1.8	13	1.8	5087	202.074	GFL14-3M □□□112C22	414
	7	0.9	8.5	0.9	12	0.9	5185	205.963	GFL11-3M □□□112C22	414
	6.5	1.6	7.8	1.6	11	1.6	5655	224.636	GFL14-3M □□□112C22	414
	5.7	1.6	6.9	1.6	10	1.6	6372	253.111	GFL14-3M □□□112C22	414
	5.3	1.4	6.4	1.4	9.4	1.4	6892	273.778	GFL14-3M □□□112C22	414
	4.4	1.3	5.3	1.3	7.7	1.3	8369	332.444	GFL14-3M □□□112C22	414
	4.1	1.2	5	1.2	7.3	1.2	8882	352.811	GFL14-3M □□□112C22	414

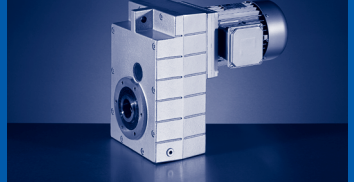

50 Hz: P_N=4.0 kW
60 Hz: P_N=4.8 kW
87 Hz: P_N=7.1 kW

n_N	1450 r/min		1750 r/min		2560 r/min		M_2 [Nm]	i		
f_N	50 Hz		60 Hz		87 Hz					
P_N	4.0 kW		4.8 kW		7.1 kW					
	n_2 [r/min]	c	n_2 [r/min]	c	n_2 [r/min]	c				
	3.7	1.2	4.4	1.2	6.4	1.2	10008	397.533	GFL14-3M □□□112C22	414
	3.4	1.0	4.1	1.0	6	1.0	10831	430.222	GFL14-3M □□□112C22	414
	2.8	0.8	3.4	0.8	4.9	0.8	13145	522.133	GFL14-3M □□□112C22	414

50 Hz: P_N=5.5 kW
60 Hz: P_N=6.6 kW

n_N	2900 r/min		3500 r/min				M_2 [Nm]	i		
f_N	50 Hz		60 Hz							
P_N	5.5 kW		6.6 kW							
	n_2 [r/min]	c	n_2 [r/min]	c						
	789	4.0	952	3.7			65	3.675	GFL06-2M □□□112C31	406
	625	4.9	754	4.6			82	4.643	GFL07-2M □□□112C31	406
	557	3.7	672	3.5			92	5.211	GFL06-2M □□□112C31	406
	504	3.5	609	3.3			101	5.750	GFL06-2M □□□112C31	406
	450	2.5	543	2.3			113	6.450	GFL06-2M □□□112C31	406
	406	2.8	490	2.6			126	7.147	GFL06-2M □□□112C31	406
	345	3.3	417	3.1			148	8.400	GFL06-2M □□□112C31	406
	307	2.8	370	2.6			166	9.463	GFL06-2M □□□112C31	406
	287	2.1	347	2.0			177	10.092	GFL06-2M □□□112C31	406
	252	2.5	304	2.4			202	11.520	GFL06-2M □□□112C31	406
	224	2.1	270	2.0			228	12.978	GFL06-2M □□□112C31	406
	197	2.0	237	1.9			259	14.743	GFL06-2M □□□112C31	406
	180	1.8	217	1.7			283	16.128	GFL06-2M □□□112C31	406
	162	3.0	195	2.9			315	17.920	GFL07-2M □□□112C31	406
	160	1.5	193	1.4			319	18.169	GFL06-2M □□□112C31	406
	143	2.8	173	2.7			357	20.286	GFL07-2M □□□112C31	406
	141	1.4	170	1.4			362	20.571	GFL06-2M □□□112C31	406
	127	2.5	153	2.3			402	22.857	GFL07-2M □□□112C31	406
	125	1.2	151	1.1			407	23.175	GFL06-2M □□□112C31	406
	117	2.8	141	2.6			437	24.850	GFL07-2M □□□112C31	406
	115	1.3	139	1.3			443	25.200	GFL06-2M □□□112C31	406
	104	2.3	125	2.2			492	28.000	GFL07-2M □□□112C31	406
	102	1.1	123	1.0			499	28.389	GFL06-2M □□□112C31	406
	90	2.2	108	2.1			568	32.344	GFL07-2M □□□112C31	406
	80	1.8	96	1.7			640	36.444	GFL07-2M □□□112C31	406
	73	1.8	88	1.7			697	39.642	GFL07-2M □□□112C31	406
	73	2.9	88	2.7			697	39.667	GFL09-2M □□□112C31	406
	65	1.5	78	1.4			785	44.667	GFL07-2M □□□112C31	406
	65	2.9	78	2.7			786	44.704	GFL09-2M □□□112C31	406
	57	2.3	68	2.2			902	51.333	GFL09-2M □□□112C31	406
	56	2.9	67	2.7			915	52.067	GFL11-2M □□□112C31	406
	50	2.3	61	2.2			1017	57.852	GFL09-2M □□□112C31	406
	49	2.9	60	2.7			1031	58.667	GFL11-2M □□□112C31	406
	47	1.9	56	1.8			1095	62.300	GFL09-2M □□□112C31	406
	46	1.3	55	1.2			1096	63.326	GFL09-3M □□□112C31	414
	46	2.4	55	2.3			1110	63.190	GFL11-2M □□□112C31	406
	46	3.0	55	2.8			1110	63.190	GFL14-2M □□□112C31	406
	44	2.6	54	2.4			1130	65.306	GFL11-3M □□□112C31	414
	41	2.0	50	1.9			1234	70.211	GFL09-2M □□□112C31	406
	41	2.7	49	2.5			1251	71.200	GFL11-2M □□□112C31	406
	40	1.2	48	1.1			1267	73.173	GFL09-3M □□□112C31	414

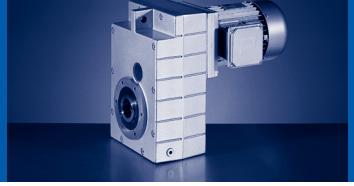

50 Hz: P_N=5.5 kW
60 Hz: P_N=6.6 kW

n_N	2900 r/min		3500 r/min				M_2 [Nm]	i		
f_N	50 Hz		60 Hz							
P_N	5.5 kW		6.6 kW							
	n_2 [r/min]	c	n_2 [r/min]	c						
	40	2.3	48	2.2			1269	73.335	GFL11-3M □□□112C31	414
	36	2.1	44	2.0			1404	79.875	GFL11-2M □□□112C31	406
	36	2.6	44	2.5			1404	79.875	GFL14-2M □□□112C31	406
	35	1.2	42	1.1			1427	82.465	GFL09-3M □□□112C31	414
	35	2.3	42	2.2			1430	82.631	GFL11-3M □□□112C31	414
	32	2.1	39	2.0			1581	90.000	GFL11-2M □□□112C31	406
	32	2.6	39	2.5			1581	90.000	GFL14-2M □□□112C31	406
	31	1.1	38	1.0			1615	93.333	GFL09-3M □□□112C31	414
	31	2.0	37	1.9			1619	93.540	GFL11-3M □□□112C31	414
	28	1.1	33	1.0			1821	105.185	GFL09-3M □□□112C31	414
	28	2.0	33	1.9			1824	105.397	GFL11-3M □□□112C31	414
	25	0.9	31	0.9			1979	114.333	GFL09-3M □□□112C31	414
	25	1.8	31	1.7			1983	114.586	GFL11-3M □□□112C31	414
	23	0.9	27	0.9			2230	128.852	GFL09-3M □□□112C31	414
	23	1.8	27	1.7			2235	129.111	GFL11-3M □□□112C31	414
	21	3.1	26	3.0			2369	136.889	GFL14-3M □□□112C31	414
	19	1.5	24	1.4			2581	149.144	GFL11-3M □□□112C31	414
	19	3.0	22	2.9			2703	156.148	GFL14-3M □□□112C31	414
	17	1.5	21	1.4			2909	168.049	GFL11-3M □□□112C31	414
	17	2.9	21	2.7			2944	170.074	GFL14-3M □□□112C31	414
	16	1.3	19	1.3			3164	182.792	GFL11-3M □□□112C31	414
	14	1.3	17	1.3			3565	205.963	GFL11-3M □□□112C31	414
	14	2.5	17	2.4			3498	202.074	GFL14-3M □□□112C31	414
	13	1.2	16	1.1			3888	224.636	GFL11-3M □□□112C31	414
	13	2.3	16	2.1			3888	224.636	GFL14-3M □□□112C31	414
	12	1.2	14	1.1			4381	253.111	GFL11-3M □□□112C31	414
	12	2.3	14	2.1			4381	253.111	GFL14-3M □□□112C31	414
	11	1.1	13	1.1			4626	267.259	GFL11-3M □□□112C31	414
	11	2.1	13	2.0			4739	273.778	GFL14-3M □□□112C31	414
	8.9	1.0	11	0.9			5669	327.556	GFL11-3M □□□112C31	414
	8.7	1.8	11	1.7			5754	332.444	GFL14-3M □□□112C31	414
	8.2	1.7	9.9	1.6			6106	352.811	GFL14-3M □□□112C31	414
	7.3	1.7	8.8	1.6			6881	397.533	GFL14-3M □□□112C31	414
	6.7	1.4	8.1	1.4			7446	430.222	GFL14-3M □□□112C31	414
	5.6	1.2	6.7	1.1			9037	522.133	GFL14-3M □□□112C31	414
	5.2	0.9	6.2	0.9			9734	562.391	GFL14-3M □□□112C31	414
	4.6	0.9	5.5	0.9			10968	633.680	GFL14-3M □□□112C31	414

50 Hz: P_N=5.5 kW
60 Hz: P_N=6.6 kW
87 Hz: P_N=9.7 kW

n_N	1445 r/min		1745 r/min		2555 r/min		M_2 [Nm]	i		
f_N	50 Hz		60 Hz		87 Hz					
P_N	5.5 kW		6.6 kW		9.7 kW					
	n_2 [r/min]	c	n_2 [r/min]	c	n_2 [r/min]	c				
	431	3.0	521	2.9	763	2.5	118	3.350	GFL07-2M □□□112C32	406
	393	2.5	475	2.4	695	2.1	130	3.675	GFL06-2M □□□112C32	406
	311	3.0	376	2.9	550	2.5	164	4.643	GFL07-2M □□□112C32	406
	280	3.0	338	2.9	495	2.5	182	5.159	GFL07-2M □□□112C32	406
	277	2.3	335	2.2	490	1.9	184	5.211	GFL06-2M □□□112C32	406
	254	3.0	306	2.9	449	2.5	201	5.695	GFL07-2M □□□112C32	406
	251	2.2	304	2.1	444	1.8	203	5.750	GFL06-2M □□□112C32	406
	226	2.5	273	2.4	399	2.1	226	6.400	GFL07-2M □□□112C32	406
	224	1.6	271	1.5	396	1.3	228	6.450	GFL06-2M □□□112C32	406
	202	1.7	244	1.6	358	1.4	252	7.147	GFL06-2M □□□112C32	406
	202	3.0	244	2.9	357	2.5	252	7.150	GFL07-2M □□□112C32	406
	174	3.0	210	2.9	307	2.5	294	8.324	GFL07-2M □□□112C32	406
	172	2.0	208	1.9	304	1.7	296	8.400	GFL06-2M □□□112C32	406
	154	3.0	186	2.9	272	2.5	331	9.379	GFL07-2M □□□112C32	406
	153	1.7	184	1.7	270	1.5	334	9.463	GFL06-2M □□□112C32	406
	149	2.7	180	2.5	263	2.2	343	9.714	GFL07-2M □□□112C32	406
	143	1.3	173	1.2	253	1.1	356	10.092	GFL06-2M □□□112C32	406
	129	3.2	156	3.0	229	2.6	394	11.167	GFL09-2M □□□112C32	406
	125	1.6	152	1.5	222	1.3	406	11.520	GFL06-2M □□□112C32	406
	125	2.7	151	2.5	222	2.2	407	11.538	GFL07-2M □□□112C32	406
	111	1.3	135	1.2	197	1.1	458	12.978	GFL06-2M □□□112C32	406
	111	2.4	134	2.3	197	2.0	458	13.000	GFL07-2M □□□112C32	406
	102	2.3	123	2.2	180	1.9	501	14.200	GFL07-2M □□□112C32	406
	98	1.2	118	1.2	173	1.0	520	14.743	GFL06-2M □□□112C32	406
	91	2.1	110	2.0	161	1.8	561	15.904	GFL07-2M □□□112C32	406
	90	1.1	108	1.1	158	1.0	569	16.128	GFL06-2M □□□112C32	406
	89	3.2	107	3.0	156	2.6	576	16.333	GFL09-2M □□□112C32	406
	81	1.9	97	1.8	143	1.6	632	17.920	GFL07-2M □□□112C32	406
	80	0.9	96	0.9			641	18.169	GFL06-2M □□□112C32	406
	79	3.2	95	3.0	139	2.6	649	18.407	GFL09-2M □□□112C32	406
	74	2.8	89	2.6	130	2.3	694	19.667	GFL09-2M □□□112C32	406
	71	1.8	86	1.7	126	1.5	715	20.286	GFL07-2M □□□112C32	406
	70	0.9	85	0.9			725	20.571	GFL06-2M □□□112C32	406
	65	2.8	79	2.6	115	2.3	782	22.164	GFL09-2M □□□112C32	406
	63	1.5	76	1.5	112	1.3	806	22.857	GFL07-2M □□□112C32	406
	60	2.4	72	2.4	106	2.3	850	24.111	GFL09-2M □□□112C32	406
	58	1.5	70	1.5	103	1.5	876	24.850	GFL07-2M □□□112C32	406
	53	2.4	64	2.4	94	2.3	958	27.173	GFL09-2M □□□112C32	406
	52	1.3	62	1.3	91	1.2	987	28.000	GFL07-2M □□□112C32	406
	45	1.2	54	1.2	79	1.1	1141	32.344	GFL07-2M □□□112C32	406
	44	1.9	53	1.9	78	1.8	1152	32.667	GFL09-2M □□□112C32	406

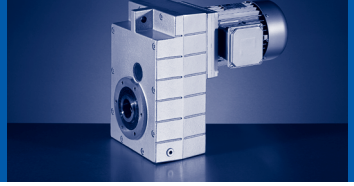

50 Hz: P_N=5.5 kW
60 Hz: P_N=6.6 kW
87 Hz: P_N=9.7 kW

n_N	1445 r/min		1745 r/min		2555 r/min		M_2 [Nm]	i		
f_N	50 Hz		60 Hz		87 Hz					
P_N	5.5 kW		6.6 kW		9.7 kW					
	n_2 [r/min]	c	n_2 [r/min]	c	n_2 [r/min]	c				
	44	2.4	53	2.4	78	2.2	1155	32.739	GFL11-2M □□□112C32	406
	40	1.0	48	1.0	70	0.9	1285	36.444	GFL07-2M □□□112C32	406
	39	1.9	47	1.9	69	1.8	1298	36.815	GFL09-2M □□□112C32	406
	39	2.4	47	2.4	69	2.2	1301	36.889	GFL11-2M □□□112C32	406
	37	1.0	44	1.0	65	0.9	1398	39.642	GFL07-2M □□□112C32	406
	36	1.6	44	1.6	64	1.5	1399	39.667	GFL09-2M □□□112C32	406
	36	2.0	43	2.0	64	1.9	1419	40.233	GFL11-2M □□□112C32	406
	32	1.6	39	1.6	57	1.5	1577	44.704	GFL09-2M □□□112C32	406
	32	2.0	39	2.0	56	1.9	1599	45.333	GFL11-2M □□□112C32	406
	28	1.3	34	1.3	50	1.2	1810	51.333	GFL09-2M □□□112C32	406
	28	1.6	34	1.6	49	1.5	1836	52.067	GFL11-2M □□□112C32	406
	28	2.0	34	2.0	49	1.9	1836	52.067	GFL14-2M □□□112C32	406
	25	1.3	30	1.3	44	1.2	2040	57.852	GFL09-2M □□□112C32	406
	25	1.6	30	1.6	44	1.5	2069	58.667	GFL11-2M □□□112C32	406
	25	2.0	30	2.0	44	1.9	2069	58.667	GFL14-2M □□□112C32	406
	23	1.1	28	1.1	41	1.0	2197	62.300	GFL09-2M □□□112C32	406
	23	1.3	28	1.3	40	1.3	2228	63.190	GFL11-2M □□□112C32	406
	23	1.6	28	1.6	40	1.6	2228	63.190	GFL14-2M □□□112C32	406
	23	2.5	27	2.5	40	2.4	2233	64.296	GFL14-3M □□□112C32	414
	22	1.3	27	1.3	39	1.3	2268	65.306	GFL11-3M □□□112C32	414
	21	1.0	25	1.0	36	1.0	2476	70.211	GFL09-2M □□□112C32	406
	21	2.3	25	2.3	37	2.3	2387	68.708	GFL14-3M □□□112C32	414
	20	1.1	24	1.1	35	1.1	2547	73.335	GFL11-3M □□□112C32	414
	20	1.3	25	1.3	36	1.3	2511	71.200	GFL11-2M □□□112C32	406
	20	1.6	25	1.6	36	1.6	2511	71.200	GFL14-2M □□□112C32	406
	19	2.3	23	2.3	33	2.3	2689	77.418	GFL14-3M □□□112C32	414
	18	1.1	22	1.1	32	1.1	2817	79.875	GFL11-2M □□□112C32	406
	18	1.1	21	1.1	31	1.1	2870	82.631	GFL11-3M □□□112C32	414
	18	1.3	22	1.3	32	1.3	2817	79.875	GFL14-2M □□□112C32	406
	17	2.1	21	2.1	30	2.1	2954	85.037	GFL14-3M □□□112C32	414
	16	1.1	19	1.1	28	1.1	3174	90.000	GFL11-2M □□□112C32	406
	16	1.3	19	1.3	28	1.3	3174	90.000	GFL14-2M □□□112C32	406
	15	1.0	19	1.0	27	1.0	3249	93.540	GFL11-3M □□□112C32	414
	14	1.0	17	1.0	24	1.0	3661	105.397	GFL11-3M □□□112C32	414
	14	1.9	17	1.9	24	1.9	3643	104.889	GFL14-3M □□□112C32	414
	13	0.9	15	0.9	22	0.9	3980	114.586	GFL11-3M □□□112C32	414
	13	1.7	15	1.7	22	1.7	3964	114.126	GFL14-3M □□□112C32	414
	11	0.9	14	0.9	20	0.9	4485	129.111	GFL11-3M □□□112C32	414
	11	1.6	13	1.6	19	1.6	4755	136.889	GFL14-3M □□□112C32	414
	11	1.7	14	1.7	20	1.7	4467	128.593	GFL14-3M □□□112C32	414
	9.3	1.5	11	1.5	16	1.5	5424	156.148	GFL14-3M □□□112C32	414

50 Hz: P_N=5.5 kW
60 Hz: P_N=6.6 kW
87 Hz: P_N=9.7 kW

n_N	1445 r/min		1745 r/min		2555 r/min		M_2 [Nm]	i		
f_N	50 Hz		60 Hz		87 Hz					
P_N	5.5 kW		6.6 kW		9.7 kW					
	n_2 [r/min]	c	n_2 [r/min]	c	n_2 [r/min]	c				
	8.5	1.4	10	1.4	15	1.4	5908	170.074	GFL14-3M □□□112C32	414
	7.2	1.3	8.6	1.3	13	1.3	7019	202.074	GFL14-3M □□□112C32	414
	6.4	1.1	7.8	1.1	11	1.1	7803	224.636	GFL14-3M □□□112C32	414
	5.7	1.1	6.9	1.1	10	1.1	8792	253.111	GFL14-3M □□□112C32	414
	5.3	1.0	6.4	1.0	9.3	1.0	9510	273.778	GFL14-3M □□□112C32	414
	4.4	0.9	5.3	0.9	7.7	0.9	11548	332.444	GFL14-3M □□□112C32	414
	4.1	0.9	5	0.9	7.2	0.9	12255	352.811	GFL14-3M □□□112C32	414
	3.6	0.8	4.4	0.8	6.4	0.8	13809	397.533	GFL14-3M □□□112C32	414

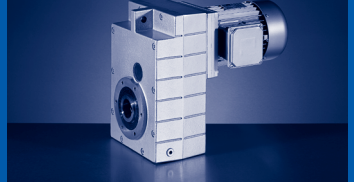

50 Hz: P_N=7.5 kW
60 Hz: P_N=9.0 kW

n_N	2890 r/min		3490 r/min				M_2 [Nm]	i		
f_N	50 Hz		60 Hz							
P_N	7.5 kW		9.0 kW							
	n_2 [r/min]	c	n_2 [r/min]	c						
	786	2.9	950	2.7			88	3.675	GFL06-2M □□□112C41	406
	623	3.6	752	3.4			112	4.643	GFL07-2M □□□112C41	406
	555	2.7	670	2.6			125	5.211	GFL06-2M □□□112C41	406
	503	2.6	607	2.4			138	5.750	GFL06-2M □□□112C41	406
	452	2.9	545	2.7			154	6.400	GFL07-2M □□□112C41	406
	448	1.8	541	1.7			155	6.450	GFL06-2M □□□112C41	406
	404	2.0	488	1.9			172	7.147	GFL06-2M □□□112C41	406
	344	2.4	416	2.3			202	8.400	GFL06-2M □□□112C41	406
	305	2.1	369	1.9			228	9.463	GFL06-2M □□□112C41	406
	298	3.1	359	2.9			234	9.714	GFL07-2M □□□112C41	406
	286	1.5	346	1.4			243	10.092	GFL06-2M □□□112C41	406
	251	1.8	303	1.7			277	11.520	GFL06-2M □□□112C41	406
	251	3.1	303	2.9			277	11.538	GFL07-2M □□□112C41	406
	223	1.5	269	1.4			312	12.978	GFL06-2M □□□112C41	406
	222	2.8	269	2.6			313	13.000	GFL07-2M □□□112C41	406
	204	2.7	246	2.5			341	14.200	GFL07-2M □□□112C41	406
	196	1.5	237	1.4			355	14.743	GFL06-2M □□□112C41	406
	182	2.5	219	2.3			382	15.904	GFL07-2M □□□112C41	406
	179	1.3	216	1.3			388	16.128	GFL06-2M □□□112C41	406
	161	2.2	195	2.1			431	17.920	GFL07-2M □□□112C41	406
	159	1.1	192	1.0			437	18.169	GFL06-2M □□□112C41	406
	147	3.3	178	3.1			473	19.667	GFL09-2M □□□112C41	406
	143	2.1	172	2.0			488	20.286	GFL07-2M □□□112C41	406
	141	1.1	170	1.0			495	20.571	GFL06-2M □□□112C41	406
	130	3.3	158	3.1			533	22.164	GFL09-2M □□□112C41	406
	126	1.8	153	1.7			550	22.857	GFL07-2M □□□112C41	406
	125	0.9	151	0.8			557	23.175	GFL06-2M □□□112C41	406
	120	3.2	145	3.0			580	24.111	GFL09-2M □□□112C41	406
	116	2.0	140	1.9			598	24.850	GFL07-2M □□□112C41	406
	115	1.0	139	0.9			606	25.200	GFL06-2M □□□112C41	406
	106	3.2	128	3.0			653	27.173	GFL09-2M □□□112C41	406
	103	1.7	125	1.6			673	28.000	GFL07-2M □□□112C41	406
	102	0.8					683	28.389	GFL06-2M □□□112C41	406
	89	1.6	108	1.5			778	32.344	GFL07-2M □□□112C41	406
	89	2.5	107	2.3			785	32.667	GFL09-2M □□□112C41	406
	88	3.2	107	3.0			787	32.739	GFL11-2M □□□112C41	406
	79	1.3	96	1.2			876	36.444	GFL07-2M □□□112C41	406
	79	2.5	95	2.3			885	36.815	GFL09-2M □□□112C41	406
	78	3.2	95	3.0			887	36.889	GFL11-2M □□□112C41	406
	73	1.3	88	1.2			953	39.642	GFL07-2M □□□112C41	406
	73	2.1	88	2.0			954	39.667	GFL09-2M □□□112C41	406

50 Hz: P_N=7.5 kW
60 Hz: P_N=9.0 kW

n_N	2890 r/min		3490 r/min				M_2 [Nm]	i		
f_N	50 Hz		60 Hz							
P_N	7.5 kW		9.0 kW							
	n_2 [r/min]	c	n_2 [r/min]	c						
	72	2.6	87	2.5			967	40.233	GFL11-2M □□□112C41	406
	65	1.1	78	1.0			1074	44.667	GFL07-2M □□□112C41	406
	65	2.1	78	2.0			1075	44.704	GFL09-2M □□□112C41	406
	64	2.6	77	2.5			1090	45.333	GFL11-2M □□□112C41	406
	56	1.7	68	1.6			1234	51.333	GFL09-2M □□□112C41	406
	56	2.1	67	2.0			1252	52.067	GFL11-2M □□□112C41	406
	56	2.6	67	2.5			1252	52.067	GFL14-2M □□□112C41	406
	50	1.7	60	1.6			1391	57.852	GFL09-2M □□□112C41	406
	49	2.1	60	2.0			1411	58.667	GFL11-2M □□□112C41	406
	49	2.6	60	2.5			1411	58.667	GFL14-2M □□□112C41	406
	46	0.9	55	0.9			1500	63.326	GFL09-3M □□□112C41	414
	46	1.4	56	1.3			1498	62.300	GFL09-2M □□□112C41	406
	46	1.8	55	1.7			1519	63.190	GFL11-2M □□□112C41	406
	46	2.2	55	2.1			1519	63.190	GFL14-2M □□□112C41	406
	44	1.9	53	1.8			1547	65.306	GFL11-3M □□□112C41	414
	41	1.5	50	1.4			1688	70.211	GFL09-2M □□□112C41	406
	41	1.9	49	1.8			1712	71.200	GFL11-2M □□□112C41	406
	41	2.4	49	2.3			1712	71.200	GFL14-2M □□□112C41	406
	40	0.9	48	0.8			1733	73.173	GFL09-3M □□□112C41	414
	39	1.7	48	1.6			1737	73.335	GFL11-3M □□□112C41	414
	36	1.6	44	1.5			1921	79.875	GFL11-2M □□□112C41	406
	36	1.9	44	1.8			1921	79.875	GFL14-2M □□□112C41	406
	35	0.9	42	0.8			1953	82.465	GFL09-3M □□□112C41	414
	35	1.7	42	1.6			1957	82.631	GFL11-3M □□□112C41	414
	34	3.1	41	3.0			2014	85.037	GFL14-3M □□□112C41	414
	32	1.6	39	1.5			2164	90.000	GFL11-2M □□□112C41	406
	32	1.9	39	1.8			2164	90.000	GFL14-2M □□□112C41	406
	31	1.5	37	1.4			2215	93.540	GFL11-3M □□□112C41	414
	28	2.7	33	2.6			2484	104.889	GFL14-3M □□□112C41	414
	27	1.5	33	1.4			2496	105.397	GFL11-3M □□□112C41	414
	25	1.3	31	1.2			2714	114.586	GFL11-3M □□□112C41	414
	25	2.5	31	2.4			2703	114.126	GFL14-3M □□□112C41	414
	23	2.5	27	2.4			3046	128.593	GFL14-3M □□□112C41	414
	22	1.3	27	1.2			3058	129.111	GFL11-3M □□□112C41	414
	21	2.3	26	2.2			3242	136.889	GFL14-3M □□□112C41	414
	19	1.1	23	1.1			3532	149.144	GFL11-3M □□□112C41	414
	19	2.2	22	2.1			3698	156.148	GFL14-3M □□□112C41	414
	17	1.1	21	1.1			3980	168.049	GFL11-3M □□□112C41	414
	17	2.1	21	2.0			4028	170.074	GFL14-3M □□□112C41	414
	16	1.0	19	0.9			4329	182.792	GFL11-3M □□□112C41	414
	14	1.0	17	0.9			4878	205.963	GFL11-3M □□□112C41	414

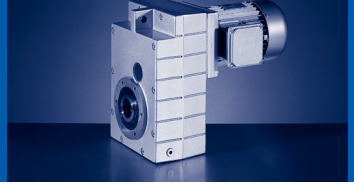

50 Hz: P_N=7.5 kW
60 Hz: P_N=9.0 kW

n_N	2890 r/min		3490 r/min				M_2 [Nm]	i		
f_N	50 Hz		60 Hz							
P_N	7.5 kW		9.0 kW							
	n_2 [r/min]	c	n_2 [r/min]	c						
	14	1.9	17	1.8			4786	202.074	GFL14-3M □□□112C41	414
	13	0.9	16	0.8			5320	224.636	GFL11-3M □□□112C41	414
	13	1.6	16	1.6			5320	224.636	GFL14-3M □□□112C41	414
	11	0.8					6330	267.259	GFL11-3M □□□112C41	414
	11	0.9	14	0.8			5995	253.111	GFL11-3M □□□112C41	414
	11	1.5	13	1.4			6484	273.778	GFL14-3M □□□112C41	414
	11	1.6	14	1.6			5995	253.111	GFL14-3M □□□112C41	414
	8.7	1.3	11	1.3			7873	332.444	GFL14-3M □□□112C41	414
	8.2	1.2	9.9	1.2			8356	352.811	GFL14-3M □□□112C41	414
	7.3	1.2	8.8	1.2			9415	397.533	GFL14-3M □□□112C41	414
	6.7	1.0	8.1	1.0			10189	430.222	GFL14-3M □□□112C41	414
	5.5	0.9	6.7	0.8			12366	522.133	GFL14-3M □□□112C41	414

50 Hz: P_N=7.5 kW
60 Hz: P_N=9.0 kW
87 Hz: P_N=13.2 kW

n_N	1455 r/min		1755 r/min		2565 r/min		M_2 [Nm]	i		
f_N	50 Hz		60 Hz		87 Hz					
P_N	7.5 kW		9.0 kW		13.2 kW					
	n_2 [r/min]	c	n_2 [r/min]	c	n_2 [r/min]	c				
	434	4.0	524	3.8	766	3.3	160	3.350	GFL07-2M □□□132C22	406
	313	2.9	378	2.8	553	2.5	222	4.643	GFL07-2M □□□132C22	406
	282	3.5	340	3.3	497	2.9	246	5.159	GFL07-2M □□□132C22	406
	256	3.4	308	3.2	450	2.8	272	5.695	GFL07-2M □□□132C22	406
	227	2.2	274	2.1	401	1.8	306	6.400	GFL07-2M □□□132C22	406
	204	2.7	246	2.6	359	2.3	342	7.150	GFL07-2M □□□132C22	406
	175	2.5	211	2.4	308	2.1	398	8.324	GFL07-2M □□□132C22	406
	155	2.2	187	2.1	274	1.9	448	9.379	GFL07-2M □□□132C22	406
	150	2.1	181	2.0	264	1.8	464	9.714	GFL07-2M □□□132C22	406
	126	2.0	152	1.9	222	1.6	551	11.538	GFL07-2M □□□132C22	406
	112	1.8	135	1.7	197	1.5	621	13.000	GFL07-2M □□□132C22	406
	103	1.7	124	1.6	181	1.4	678	14.200	GFL07-2M □□□132C22	406
	92	1.6	110	1.5	161	1.3	760	15.904	GFL07-2M □□□132C22	406
	89	3.2	107	3.0	157	2.6	780	16.333	GFL09-2M □□□132C22	406
	81	1.4	98	1.3	143	1.2	856	17.920	GFL07-2M □□□132C22	406
	79	2.8	95	2.7	139	2.4	879	18.407	GFL09-2M □□□132C22	406
	74	2.7	89	2.6	130	2.3	939	19.667	GFL09-2M □□□132C22	406
	72	1.3	87	1.2	126	1.1	969	20.286	GFL07-2M □□□132C22	406
	66	2.5	79	2.3	116	2.1	1059	22.164	GFL09-2M □□□132C22	406
	64	1.1	77	1.1	112	1.0	1092	22.857	GFL07-2M □□□132C22	406
	60	2.4	73	2.4	106	2.3	1152	24.111	GFL09-2M □□□132C22	406
	59	1.1	71	1.1	103	1.1	1187	24.850	GFL07-2M □□□132C22	406
	54	2.1	65	2.1	94	2.0	1298	27.173	GFL09-2M □□□132C22	406
	52	0.9	63	0.9	92	0.9	1337	28.000	GFL07-2M □□□132C22	406
	52	3.2	63	3.2	92	3.0	1337	28.000	GFL11-2M □□□132C22	406
	45	1.9	54	1.9	79	1.8	1560	32.667	GFL09-2M □□□132C22	406
	44	2.9	54	2.9	78	2.8	1564	32.739	GFL11-2M □□□132C22	406
	40	1.7	48	1.7	70	1.6	1758	36.815	GFL09-2M □□□132C22	406
	39	2.6	48	2.6	70	2.5	1762	36.889	GFL11-2M □□□132C22	406
	37	1.6	44	1.6	65	1.6	1894	39.667	GFL09-2M □□□132C22	406
	36	2.5	44	2.5	64	2.4	1921	40.233	GFL11-2M □□□132C22	406
	33	1.4	39	1.4	57	1.4	2135	44.704	GFL09-2M □□□132C22	406
	32	2.3	39	2.3	57	2.1	2165	45.333	GFL11-2M □□□132C22	406
	28	2.1	34	2.1	49	2.0	2487	52.067	GFL11-2M □□□132C22	406
	28	3.1	34	3.1	49	2.9	2487	52.067	GFL14-2M □□□132C22	406
	25	1.9	30	1.9	44	1.8	2802	58.667	GFL11-2M □□□132C22	406
	25	3.1	30	3.1	44	2.9	2802	58.667	GFL14-2M □□□132C22	406
	23	1.8	28	1.8	41	1.8	3018	63.190	GFL11-2M □□□132C22	406
	23	1.9	27	1.9	40	1.8	3025	64.296	GFL14-3M □□□132C22	414
	23	2.6	28	2.6	41	2.4	3018	63.190	GFL14-2M □□□132C22	406
	22	0.9	27	0.9	39	0.9	3072	65.306	GFL11-3M □□□132C22	414

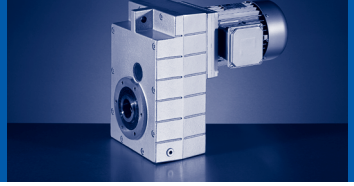

50 Hz: P_N=7.5 kW
60 Hz: P_N=9.0 kW
87 Hz: P_N=13.2 kW

n_N	1455 r/min		1755 r/min		2565 r/min		M_2 [Nm]	i		
f_N	50 Hz		60 Hz		87 Hz					
P_N	7.5 kW		9.0 kW		13.2 kW					
	n_2 [r/min]	c	n_2 [r/min]	c	n_2 [r/min]	c				
	21	1.7	26	1.7	37	1.7	3232	68.708	GFL14-3M □□□132C22	414
	20	0.8	24	0.8	35	0.8	3450	73.335	GFL11-3M □□□132C22	414
	20	1.6	25	1.6	36	1.6	3400	71.200	GFL11-2M □□□132C22	406
	20	2.6	25	2.6	36	2.6	3400	71.200	GFL14-2M □□□132C22	406
	19	1.7	23	1.7	33	1.7	3642	77.418	GFL14-3M □□□132C22	414
	18	0.8	21	0.8	31	0.8	3887	82.631	GFL11-3M □□□132C22	414
	18	1.8	22	1.8	32	1.8	3815	79.875	GFL14-2M □□□132C22	406
	17	1.6	21	1.6	30	1.6	4000	85.037	GFL14-3M □□□132C22	414
	16	1.8	20	1.8	29	1.8	4298	90.000	GFL14-2M □□□132C22	406
	14	1.4	17	1.4	25	1.4	4934	104.889	GFL14-3M □□□132C22	414
	13	1.3	15	1.3	23	1.3	5369	114.126	GFL14-3M □□□132C22	414
	11	1.1	13	1.1	19	1.1	6439	136.889	GFL14-3M □□□132C22	414
	11	1.3	14	1.3	20	1.3	6049	128.593	GFL14-3M □□□132C22	414
	9.3	1.1	11	1.1	16	1.1	7345	156.148	GFL14-3M □□□132C22	414
	8.6	1.1	10	1.1	15	1.1	8001	170.074	GFL14-3M □□□132C22	414
	6.5	0.8	7.8	0.8	11	0.8	10567	224.636	GFL14-3M □□□132C22	414
	5.8	0.8	6.9	0.8	10	0.8	11907	253.111	GFL14-3M □□□132C22	414

50 Hz: P_N=9.0 kW
60 Hz: P_N=11.0 kW

n_N	2890 r/min		3490 r/min				M_2 [Nm]	i		
f_N	50 Hz		60 Hz							
P_N	9.0 kW		11.0 kW							
	n_2 [r/min]	c	n_2 [r/min]	c						
	863	5.3	1042	5.0			97	3.350	GFL07-2M □□□132C21	406
	623	3.9	752	3.7			134	4.643	GFL07-2M □□□132C21	406
	560	4.6	677	4.3			149	5.159	GFL07-2M □□□132C21	406
	508	4.5	613	4.2			164	5.695	GFL07-2M □□□132C21	406
	452	2.9	545	2.7			185	6.400	GFL07-2M □□□132C21	406
	404	3.6	488	3.4			206	7.150	GFL07-2M □□□132C21	406
	347	3.3	419	3.1			240	8.324	GFL07-2M □□□132C21	406
	308	3.0	372	2.8			271	9.379	GFL07-2M □□□132C21	406
	298	2.8	359	2.6			280	9.714	GFL07-2M □□□132C21	406
	251	2.6	303	2.5			333	11.538	GFL07-2M □□□132C21	406
	222	2.3	269	2.2			375	13.000	GFL07-2M □□□132C21	406
	204	2.2	246	2.1			410	14.200	GFL07-2M □□□132C21	406
	182	2.1	219	1.9			459	15.904	GFL07-2M □□□132C21	406
	161	1.9	195	1.7			517	17.920	GFL07-2M □□□132C21	406
	143	1.7	172	1.6			585	20.286	GFL07-2M □□□132C21	406
	126	1.5	153	1.4			660	22.857	GFL07-2M □□□132C21	406
	116	1.7	140	1.6			717	24.850	GFL07-2M □□□132C21	406
	106	3.2	128	3.0			784	27.173	GFL09-2M □□□132C21	406
	103	1.4	125	1.3			808	28.000	GFL07-2M □□□132C21	406
	89	2.9	107	2.7			943	32.667	GFL09-2M □□□132C21	406
	79	2.6	95	2.4			1062	36.815	GFL09-2M □□□132C21	406
	73	2.5	88	2.3			1145	39.667	GFL09-2M □□□132C21	406
	65	2.1	78	2.0			1290	44.704	GFL09-2M □□□132C21	406
	56	3.2	67	3.0			1502	52.067	GFL11-2M □□□132C21	406
	49	2.8	60	2.7			1693	58.667	GFL11-2M □□□132C21	406
	46	2.8	55	2.6			1823	63.190	GFL11-2M □□□132C21	406
	45	2.8	54	2.6			1827	64.296	GFL14-3M □□□132C21	414
	44	1.6	53	1.5			1856	65.306	GFL11-3M □□□132C21	414
	42	2.8	51	2.6			1953	68.708	GFL14-3M □□□132C21	414
	41	2.7	49	2.6			2054	71.200	GFL11-2M □□□132C21	406
	39	1.4	48	1.3			2084	73.335	GFL11-3M □□□132C21	414
	37	2.8	45	2.6			2200	77.418	GFL14-3M □□□132C21	414
	36	3.0	44	2.9			2305	79.875	GFL14-2M □□□132C21	406
	35	1.4	42	1.3			2348	82.631	GFL11-3M □□□132C21	414
	34	2.6	41	2.5			2417	85.037	GFL14-3M □□□132C21	414
	32	3.0	39	2.9			2597	90.000	GFL14-2M □□□132C21	406
	31	1.2	37	1.2			2658	93.540	GFL11-3M □□□132C21	414
	28	2.3	33	2.2			2981	104.889	GFL14-3M □□□132C21	414
	27	1.2	33	1.2			2995	105.397	GFL11-3M □□□132C21	414
	25	1.1	31	1.0			3257	114.586	GFL11-3M □□□132C21	414
	25	2.1	31	2.0			3244	114.126	GFL14-3M □□□132C21	414

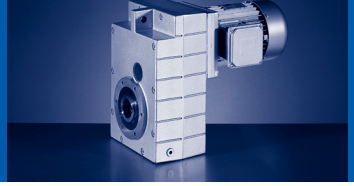

50 Hz: P_N=9.0 kW
60 Hz: P_N=11.0 kW

n_N	2890 r/min		3490 r/min				M_2 [Nm]	i		
f_N	50 Hz		60 Hz							
P_N	9.0 kW		11.0 kW							
	n_2 [r/min]	c	n_2 [r/min]	c						
	23	2.1	27	2.0			3655	128.593	GFL14-3M □□□132C21	414
	22	1.1	27	1.0			3669	129.111	GFL11-3M □□□132C21	414
	21	1.9	26	1.8			3890	136.889	GFL14-3M □□□132C21	414
	19	1.9	22	1.8			4438	156.148	GFL14-3M □□□132C21	414
	17	1.7	21	1.7			4834	170.074	GFL14-3M □□□132C21	414
	13	1.4	16	1.3			6384	224.636	GFL14-3M □□□132C21	414
	11	1.3	13	1.2			7781	273.778	GFL14-3M □□□132C21	414
	11	1.4	14	1.3			7193	253.111	GFL14-3M □□□132C21	414
	8.7	1.1	11	1.1			9448	332.444	GFL14-3M □□□132C21	414

50 Hz: P_N=9.2 kW
60 Hz: P_N=11.0 kW
87 Hz: P_N=16.2 kW

n_N	1450 r/min		1750 r/min		2560 r/min		M_2 [Nm]	i		
f_N	50 Hz		60 Hz		87 Hz					
P_N	9.2 kW		11.0 kW		16.2 kW					
	n_2 [r/min]	c	n_2 [r/min]	c	n_2 [r/min]	c				
	433	3.3	522	3.1	764	2.7	197	3.350	GFL07-2M □□□132C32	406
	312	2.4	377	2.3	551	2.0	273	4.643	GFL07-2M □□□132C32	406
	281	2.8	339	2.7	496	2.3	303	5.159	GFL07-2M □□□132C32	406
	255	2.7	307	2.6	450	2.3	335	5.695	GFL07-2M □□□132C32	406
	227	1.8	273	1.7	400	1.5	376	6.400	GFL07-2M □□□132C32	406
	203	2.2	245	2.1	358	1.8	420	7.150	GFL07-2M □□□132C32	406
	174	2.0	210	1.9	308	1.7	489	8.324	GFL07-2M □□□132C32	406
	155	1.8	187	1.7	273	1.5	551	9.379	GFL07-2M □□□132C32	406
	149	1.7	180	1.6	264	1.4	571	9.714	GFL07-2M □□□132C32	406
	126	1.6	152	1.5	222	1.3	678	11.538	GFL07-2M □□□132C32	406
	118	3.1	142	2.9	208	2.6	723	12.307	GFL09-2M □□□132C32	406
	112	1.4	135	1.4	197	1.2	764	13.000	GFL07-2M □□□132C32	406
	102	1.4	123	1.3	180	1.2	835	14.200	GFL07-2M □□□132C32	406
	101	2.8	122	2.7	179	2.4	843	14.333	GFL09-2M □□□132C32	406
	91	1.3	110	1.2	161	1.1	935	15.904	GFL07-2M □□□132C32	406
	89	2.6	107	2.4	157	2.1	960	16.333	GFL09-2M □□□132C32	406
	81	1.1	98	1.1	143	0.9	1053	17.920	GFL07-2M □□□132C32	406
	79	2.3	95	2.2	139	1.9	1082	18.407	GFL09-2M □□□132C32	406
	74	2.2	89	2.1	130	1.9	1156	19.667	GFL09-2M □□□132C32	406
	72	1.1	86	1.0	126	0.9	1193	20.286	GFL07-2M □□□132C32	406
	65	2.0	79	1.9	116	1.7	1303	22.164	GFL09-2M □□□132C32	406
	63	0.9	77	0.9			1344	22.857	GFL07-2M □□□132C32	406
	63	3.0	77	2.9	112	2.5	1344	22.857	GFL11-2M □□□132C32	406
	60	1.9	73	1.9	106	1.8	1417	24.111	GFL09-2M □□□132C32	406
	58	0.9	70	0.9	103	0.9	1461	24.850	GFL07-2M □□□132C32	406
	58	2.9	70	2.9	103	2.8	1461	24.850	GFL11-2M □□□132C32	406
	53	1.7	64	1.7	94	1.7	1597	27.173	GFL09-2M □□□132C32	406
	52	2.6	63	2.6	91	2.5	1646	28.000	GFL11-2M □□□132C32	406
	44	1.6	54	1.6	78	1.5	1920	32.667	GFL09-2M □□□132C32	406
	44	2.4	54	2.4	78	2.3	1925	32.739	GFL11-2M □□□132C32	406
	39	1.4	48	1.4	70	1.3	2164	36.815	GFL09-2M □□□132C32	406
	39	2.1	47	2.1	69	2.0	2169	36.889	GFL11-2M □□□132C32	406
	37	1.3	44	1.3	65	1.3	2332	39.667	GFL09-2M □□□132C32	406
	37	3.1	44	3.1	65	2.9	2330	39.642	GFL14-2M □□□132C32	406
	36	2.1	44	2.1	64	2.0	2365	40.233	GFL11-2M □□□132C32	406
	33	3.1	39	3.1	57	2.9	2626	44.667	GFL14-2M □□□132C32	406
	32	1.2	39	1.2	57	1.1	2628	44.704	GFL09-2M □□□132C32	406
	32	1.8	39	1.8	57	1.7	2665	45.333	GFL11-2M □□□132C32	406
	28	1.7	34	1.7	49	1.6	3061	52.067	GFL11-2M □□□132C32	406
	28	2.5	34	2.5	49	2.4	3061	52.067	GFL14-2M □□□132C32	406
	25	1.5	30	1.5	44	1.5	3449	58.667	GFL11-2M □□□132C32	406

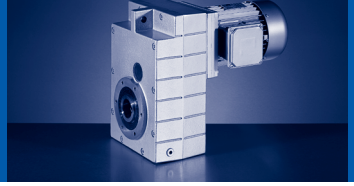

50 Hz: P_N=9.2 kW
60 Hz: P_N=11.0 kW
87 Hz: P_N=16.2 kW

n_N	1450 r/min		1750 r/min		2560 r/min		M_2 [Nm]	i		
f_N	50 Hz		60 Hz		87 Hz					
P_N	9.2 kW		11.0 kW		16.2 kW					
	n_2 [r/min]	c	n_2 [r/min]	c	n_2 [r/min]	c				
	25	2.5	30	2.5	44	2.4	3449	58.667	GFL14-2M □□□132C32	406
	23	1.5	27	1.5	40	1.4	3723	64.296	GFL14-3M □□□132C32	414
	23	1.5	28	1.5	41	1.4	3715	63.190	GFL11-2M □□□132C32	406
	23	2.1	28	2.1	41	2.0	3715	63.190	GFL14-2M □□□132C32	406
	21	1.4	26	1.4	37	1.4	3978	68.708	GFL14-3M □□□132C32	414
	20	1.3	25	1.3	36	1.3	4186	71.200	GFL11-2M □□□132C32	406
	20	2.1	25	2.1	36	2.1	4186	71.200	GFL14-2M □□□132C32	406
	19	1.4	23	1.4	33	1.4	4483	77.418	GFL14-3M □□□132C32	414
	18	1.5	22	1.5	32	1.5	4695	79.875	GFL14-2M □□□132C32	406
	17	1.3	21	1.3	30	1.3	4924	85.037	GFL14-3M □□□132C32	414
	16	1.5	19	1.5	28	1.5	5291	90.000	GFL14-2M □□□132C32	406
	14	1.1	17	1.1	24	1.1	6073	104.889	GFL14-3M □□□132C32	414
	13	1.0	15	1.0	22	1.0	6608	114.126	GFL14-3M □□□132C32	414
	11	0.9	13	0.9	19	0.9	7926	136.889	GFL14-3M □□□132C32	414
	11	1.0	14	1.0	20	1.0	7446	128.593	GFL14-3M □□□132C32	414
	9.3	0.9	11	0.9	16	0.9	9041	156.148	GFL14-3M □□□132C32	414
	8.5	0.9	10	0.9	15	0.9	9848	170.074	GFL14-3M □□□132C32	414

50 Hz: P_N=11.0 kW
60 Hz: P_N=13.2 kW
87 Hz: P_N=19.3 kW

n_N	1460 r/min		1760 r/min		2565 r/min		M_2 [Nm]	i		
f_N	50 Hz		60 Hz		87 Hz					
P_N	11.0 kW		13.2 kW		19.3 kW					
	n_2 [r/min]	c	n_2 [r/min]	c	n_2 [r/min]	c				
	436	2.7	525	2.6	767	2.3	234	3.350	GFL07-2M □□□160C22	406
	315	2.0	379	1.9	554	1.7	324	4.643	GFL07-2M □□□160C22	406
	283	2.4	341	2.2	498	2.0	360	5.159	GFL07-2M □□□160C22	406
	256	2.3	309	2.2	451	1.9	398	5.695	GFL07-2M □□□160C22	406
	228	1.5	275	1.4	402	1.2	447	6.400	GFL07-2M □□□160C22	406
	204	1.8	246	1.7	359	1.5	499	7.150	GFL07-2M □□□160C22	406
	175	1.7	211	1.6	309	1.4	581	8.324	GFL07-2M □□□160C22	406
	156	1.5	188	1.5	274	1.3	655	9.379	GFL07-2M □□□160C22	406
	150	1.4	181	1.4	265	1.2	678	9.714	GFL07-2M □□□160C22	406
	131	3.0	158	2.8	230	2.5	780	11.167	GFL09-2M □□□160C22	406
	127	1.3	153	1.3	223	1.1	805	11.538	GFL07-2M □□□160C22	406
	119	2.6	143	2.5	209	2.2	859	12.307	GFL09-2M □□□160C22	406
	112	1.2	135	1.1	198	1.0	908	13.000	GFL07-2M □□□160C22	406
	103	1.2	124	1.1	181	1.0	991	14.200	GFL07-2M □□□160C22	406
	102	2.4	123	2.3	179	2.0	1001	14.333	GFL09-2M □□□160C22	406
	92	1.1	111	1.0	162	0.9	1110	15.904	GFL07-2M □□□160C22	406
	89	2.2	108	2.1	157	1.8	1140	16.333	GFL09-2M □□□160C22	406
	82	1.0	98	0.9			1251	17.920	GFL07-2M □□□160C22	406
	82	3.0	98	2.9	143	2.5	1251	17.920	GFL11-2M □□□160C22	406
	79	1.9	96	1.8	140	1.6	1285	18.407	GFL09-2M □□□160C22	406
	74	1.9	90	1.8	131	1.6	1373	19.667	GFL09-2M □□□160C22	406
	72	2.9	87	2.7	127	2.4	1416	20.286	GFL11-2M □□□160C22	406
	66	1.7	79	1.6	116	1.4	1547	22.164	GFL09-2M □□□160C22	406
	64	2.5	77	2.4	112	2.1	1596	22.857	GFL11-2M □□□160C22	406
	61	1.6	73	1.6	107	1.5	1683	24.111	GFL09-2M □□□160C22	406
	59	2.5	71	2.5	103	2.3	1735	24.850	GFL11-2M □□□160C22	406
	54	1.5	65	1.5	95	1.4	1897	27.173	GFL09-2M □□□160C22	406
	52	2.2	63	2.2	92	2.1	1955	28.000	GFL11-2M □□□160C22	406
	45	2.0	54	2.0	79	1.9	2285	32.739	GFL11-2M □□□160C22	406
	40	1.8	48	1.8	70	1.7	2575	36.889	GFL11-2M □□□160C22	406
	36	1.7	44	1.7	64	1.7	2809	40.233	GFL11-2M □□□160C22	406
	32	1.5	39	1.5	57	1.5	3165	45.333	GFL11-2M □□□160C22	406
	28	2.8	34	2.8	49	2.6	3635	52.067	GFL14-2M □□□160C22	406
	25	2.8	30	2.8	44	2.6	4095	58.667	GFL14-2M □□□160C22	406
	23	1.3	27	1.3	40	1.2	4421	64.296	GFL14-3M □□□160C22	414
	23	2.3	28	2.3	41	2.1	4411	63.190	GFL14-2M □□□160C22	406
	21	1.2	26	1.2	37	1.2	4724	68.708	GFL14-3M □□□160C22	414
	21	2.1	25	2.1	36	2.1	4970	71.200	GFL14-2M □□□160C22	406
	19	1.2	23	1.2	33	1.2	5323	77.418	GFL14-3M □□□160C22	414
	17	1.1	21	1.1	30	1.1	5847	85.037	GFL14-3M □□□160C22	414

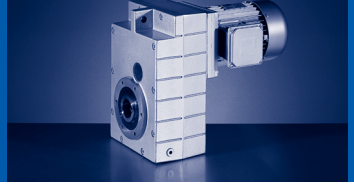

50 Hz: P_N=15.0 kW
60 Hz: P_N=18.0 kW
87 Hz: P_N=26.4 kW

n_N	1460 r/min		1760 r/min		2565 r/min		M_2 [Nm]	i		
f_N	50 Hz		60 Hz		87 Hz					
P_N	15.0 kW		18.0 kW		26.4 kW					
	n_2 [r/min]	c	n_2 [r/min]	c	n_2 [r/min]	c				
	436	2.0	525	1.9	767	1.7	319	3.350	GFL07-2M □□□160C32	406
	315	1.5	379	1.4	554	1.2	442	4.643	GFL07-2M □□□160C32	406
	283	1.7	341	1.6	498	1.5	491	5.159	GFL07-2M □□□160C32	406
	256	1.7	309	1.6	451	1.4	542	5.695	GFL07-2M □□□160C32	406
	228	1.1	275	1.0	402	0.9	609	6.400	GFL07-2M □□□160C32	406
	213	3.2	256	3.0	374	2.7	653	6.864	GFL09-2M □□□160C32	406
	204	1.4	246	1.3	359	1.1	681	7.150	GFL07-2M □□□160C32	406
	196	3.0	236	2.9	344	2.5	711	7.466	GFL09-2M □□□160C32	406
	175	1.3	211	1.2	309	1.1	792	8.324	GFL07-2M □□□160C32	406
	162	2.6	195	2.5	285	2.2	858	9.010	GFL09-2M □□□160C32	406
	156	1.1	188	1.1	274	0.9	893	9.379	GFL07-2M □□□160C32	406
	150	1.1	181	1.0	265	0.9	925	9.714	GFL07-2M □□□160C32	406
	149	2.5	180	2.4	262	2.1	933	9.799	GFL09-2M □□□160C32	406
	131	2.2	158	2.1	230	1.8	1063	11.167	GFL09-2M □□□160C32	406
	127	1.0	153	0.9	223	0.8	1098	11.538	GFL07-2M □□□160C32	406
	119	1.9	143	1.8	209	1.6	1171	12.307	GFL09-2M □□□160C32	406
	117	2.9	141	2.8	206	2.4	1188	12.480	GFL11-2M □□□160C32	406
	112	0.9	135	0.8			1237	13.000	GFL07-2M □□□160C32	406
	103	0.9	124	0.8			1352	14.200	GFL07-2M □□□160C32	406
	102	1.7	123	1.7	179	1.5	1364	14.333	GFL09-2M □□□160C32	406
	100	2.7	121	2.6	177	2.3	1384	14.538	GFL11-2M □□□160C32	406
	92	2.5	111	2.4	162	2.1	1514	15.904	GFL11-2M □□□160C32	406
	89	1.6	108	1.5	157	1.3	1555	16.333	GFL09-2M □□□160C32	406
	82	2.2	98	2.1	143	1.9	1706	17.920	GFL11-2M □□□160C32	406
	79	1.4	96	1.3	140	1.2	1752	18.407	GFL09-2M □□□160C32	406
	74	1.4	90	1.3	131	1.1	1872	19.667	GFL09-2M □□□160C32	406
	72	2.1	87	2.0	127	1.8	1931	20.286	GFL11-2M □□□160C32	406
	66	1.2	79	1.2	116	1.0	2110	22.164	GFL09-2M □□□160C32	406
	64	1.9	77	1.8	112	1.6	2176	22.857	GFL11-2M □□□160C32	406
	61	1.2	73	1.2	107	1.1	2295	24.111	GFL09-2M □□□160C32	406
	59	1.8	71	1.8	103	1.7	2365	24.850	GFL11-2M □□□160C32	406
	54	1.1	65	1.1	95	1.0	2587	27.173	GFL09-2M □□□160C32	406
	52	1.6	63	1.6	92	1.5	2665	28.000	GFL11-2M □□□160C32	406
	45	1.5	54	1.5	79	1.4	3116	32.739	GFL11-2M □□□160C32	406
	45	3.1	54	3.1	80	2.9	3079	32.344	GFL14-2M □□□160C32	406
	40	1.3	48	1.3	70	1.2	3511	36.889	GFL11-2M □□□160C32	406
	40	3.1	48	3.1	71	2.9	3469	36.444	GFL14-2M □□□160C32	406
	37	2.6	44	2.6	65	2.5	3773	39.642	GFL14-2M □□□160C32	406
	36	1.3	44	1.3	64	1.2	3830	40.233	GFL11-2M □□□160C32	406
	33	2.6	39	2.6	58	2.5	4252	44.667	GFL14-2M □□□160C32	406
	32	1.1	39	1.1	57	1.1	4315	45.333	GFL11-2M □□□160C32	406

50 Hz: P_N=15.0 kW
60 Hz: P_N=18.0 kW
87 Hz: P_N=26.4 kW

n_N	1460 r/min		1760 r/min		2565 r/min		M_2 [Nm]	i		
f_N	50 Hz		60 Hz		87 Hz					
P_N	15.0 kW		18.0 kW		26.4 kW					
	n_2 [r/min]	c	n_2 [r/min]	c	n_2 [r/min]	c				
	28	2.0	34	2.0	49	1.9	4956	52.067	GFL14-2M □□□160C32	406
	25	2.0	30	2.0	44	1.9	5584	58.667	GFL14-2M □□□160C32	406
	23	0.9	27	0.9	40	0.9	6028	64.296	GFL14-3M □□□160C32	414
	23	1.7	28	1.7	41	1.6	6015	63.190	GFL14-2M □□□160C32	406
	21	0.8	26	0.8	37	0.8	6442	68.708	GFL14-3M □□□160C32	414
	21	1.6	25	1.6	36	1.6	6777	71.200	GFL14-2M □□□160C32	406
	19	0.8	23	0.8	33	0.8	7259	77.418	GFL14-3M □□□160C32	414

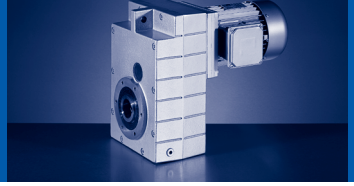

50 Hz: P_N=18.5 kW
60 Hz: P_N=22.2 kW
87 Hz: P_N=32.4 kW

n_N	1470 r/min		1770 r/min		2575 r/min		M_2 [Nm]	i		
f_N	50 Hz		60 Hz		87 Hz					
P_N	18.5 kW		22.2 kW		32.4 kW					
	n_2 [r/min]	c	n_2 [r/min]	c	n_2 [r/min]	c				
	214	2.6	258	2.5	376	2.2	800	6.864	GFL09-2M □□□180C12	406
	214	2.8	258	2.7	376	2.3	800	6.864	GFL11-2M □□□180C12	406
	197	2.5	237	2.3	346	2.1	871	7.466	GFL09-2M □□□180C12	406
	197	2.8	237	2.7	346	2.3	871	7.466	GFL11-2M □□□180C12	406
	167	2.8	201	2.7	293	2.3	1026	8.800	GFL14-2M □□□180C12	406
	163	2.1	197	2.0	286	1.8	1051	9.010	GFL09-2M □□□180C12	406
	163	2.8	197	2.7	286	2.3	1051	9.010	GFL11-2M □□□180C12	406
	154	2.8	185	2.7	270	2.3	1116	9.571	GFL14-2M □□□180C12	406
	150	2.0	181	1.9	263	1.7	1143	9.799	GFL09-2M □□□180C12	406
	150	2.8	181	2.7	263	2.3	1143	9.799	GFL11-2M □□□180C12	406
	137	2.8	165	2.7	241	2.3	1250	10.720	GFL11-2M □□□180C12	406
	132	1.8	159	1.7	231	1.5	1302	11.167	GFL09-2M □□□180C12	406
	119	1.6	144	1.5	210	1.3	1435	12.307	GFL09-2M □□□180C12	406
	118	2.4	142	2.3	207	2.0	1455	12.480	GFL11-2M □□□180C12	406
	104	2.8	125	2.7	182	2.3	1656	14.200	GFL14-2M □□□180C12	406
	103	1.4	124	1.3	180	1.2	1671	14.333	GFL09-2M □□□180C12	406
	101	2.2	122	2.1	178	1.8	1695	14.538	GFL11-2M □□□180C12	406
	94	2.8	113	2.7	165	2.3	1821	15.620	GFL14-2M □□□180C12	406
	92	2.1	111	1.9	162	1.7	1854	15.904	GFL11-2M □□□180C12	406
	90	1.3	108	1.2	158	1.1	1905	16.333	GFL09-2M □□□180C12	406
	84	2.8	101	2.7	147	2.3	2052	17.600	GFL14-2M □□□180C12	406
	82	1.8	99	1.7	144	1.5	2090	17.920	GFL11-2M □□□180C12	406
	80	1.2	96	1.1	140	1.0	2146	18.407	GFL09-2M □□□180C12	406
	75	1.1	90	1.1	131	0.9	2293	19.667	GFL09-2M □□□180C12	406
	74	2.8	89	2.7	129	2.3	2326	19.948	GFL14-2M □□□180C12	406
	73	1.7	87	1.6	127	1.4	2365	20.286	GFL11-2M □□□180C12	406
	66	1.0	80	1.0	116	0.8	2584	22.164	GFL09-2M □□□180C12	406
	65	2.8	79	2.7	115	2.3	2621	22.476	GFL14-2M □□□180C12	406
	64	1.5	77	1.4	113	1.3	2665	22.857	GFL11-2M □□□180C12	406
	61	1.0	73	1.0	107	0.9	2811	24.111	GFL09-2M □□□180C12	406
	60	2.7	72	2.7	106	2.5	2852	24.456	GFL14-2M □□□180C12	406
	59	1.5	71	1.5	104	1.4	2898	24.850	GFL11-2M □□□180C12	406
	54	0.9	65	0.9	95	0.8	3168	27.173	GFL09-2M □□□180C12	406
	53	1.3	63	1.3	92	1.2	3265	28.000	GFL11-2M □□□180C12	406
	53	2.7	64	2.7	94	2.5	3213	27.556	GFL14-2M □□□180C12	406
	45	1.2	54	1.2	79	1.1	3817	32.739	GFL11-2M □□□180C12	406
	45	2.1	55	2.1	80	2.0	3771	32.344	GFL14-2M □□□180C12	406
	40	1.1	48	1.1	70	1.0	4301	36.889	GFL11-2M □□□180C12	406
	40	2.1	49	2.1	71	2.0	4249	36.444	GFL14-2M □□□180C12	406
	37	1.0	44	1.0	64	1.0	4691	40.233	GFL11-2M □□□180C12	406
	37	1.8	45	1.8	65	1.7	4622	39.642	GFL14-2M □□□180C12	406

50 Hz: P_N=18.5 kW
60 Hz: P_N=22.2 kW
87 Hz: P_N=32.4 kW

n_N	1470 r/min		1770 r/min		2575 r/min		M_2 [Nm]	i		
f_N	50 Hz		60 Hz		87 Hz					
P_N	18.5 kW		22.2 kW		32.4 kW					
	n_2 [r/min]	c	n_2 [r/min]	c	n_2 [r/min]	c				
	33	1.8	40	1.8	58	1.7	5208	44.667	GFL14-2M □□□180C12	406
	32	0.9	39	0.9	57	0.9	5286	45.333	GFL11-2M □□□180C12	406
	28	1.4	34	1.4	50	1.4	6071	52.067	GFL14-2M □□□180C12	406
	25	1.4	30	1.4	44	1.4	6841	58.667	GFL14-2M □□□180C12	406
	23	1.2	28	1.2	41	1.1	7368	63.190	GFL14-2M □□□180C12	406
	21	1.2	25	1.2	36	1.2	8302	71.200	GFL14-2M □□□180C12	406

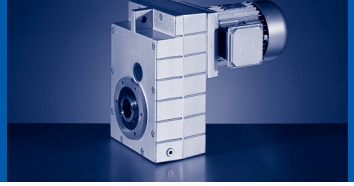

50 Hz: P_N=22.0 kW
60 Hz: P_N=26.4 kW
87 Hz: P_N=38.7 kW

n_N	1465 r/min		1765 r/min		2560 r/min		M_2 [Nm]	i		
f_N	50 Hz		60 Hz		87 Hz					
P_N	22.0 kW		26.4 kW		38.7 kW					
	n_2 [r/min]	c	n_2 [r/min]	c	n_2 [r/min]	c				
	213	2.2	257	2.1	375	1.8	955	6.864	GFL09-2M □□□180C32	406
	213	3.1	257	2.9	375	2.6	955	6.864	GFL11-2M □□□180C32	406
	196	2.1	236	2.0	345	1.7	1039	7.466	GFL09-2M □□□180C32	406
	196	3.1	236	2.9	345	2.6	1039	7.466	GFL11-2M □□□180C32	406
	167	3.2	201	3.0	293	2.6	1224	8.800	GFL14-2M □□□180C32	406
	163	1.8	196	1.7	286	1.5	1254	9.010	GFL09-2M □□□180C32	406
	163	2.9	196	2.7	286	2.4	1254	9.010	GFL11-2M □□□180C32	406
	153	3.2	184	3.0	269	2.6	1332	9.571	GFL14-2M □□□180C32	406
	150	1.7	180	1.6	263	1.4	1363	9.799	GFL09-2M □□□180C32	406
	150	2.8	180	2.6	263	2.3	1363	9.799	GFL11-2M □□□180C32	406
	137	2.6	165	2.4	240	2.1	1492	10.720	GFL11-2M □□□180C32	406
	131	1.5	158	1.4	231	1.2	1554	11.167	GFL09-2M □□□180C32	406
	119	1.3	143	1.2	209	1.1	1712	12.307	GFL09-2M □□□180C32	406
	117	2.0	141	1.9	206	1.7	1736	12.480	GFL11-2M □□□180C32	406
	103	3.2	124	3.0	181	2.6	1976	14.200	GFL14-2M □□□180C32	406
	102	1.2	123	1.1	180	1.0	1994	14.333	GFL09-2M □□□180C32	406
	101	1.8	121	1.7	177	1.5	2023	14.538	GFL11-2M □□□180C32	406
	94	3.1	113	2.9	165	2.6	2173	15.620	GFL14-2M □□□180C32	406
	92	1.7	111	1.6	162	1.4	2213	15.904	GFL11-2M □□□180C32	406
	90	1.1	108	1.0	158	0.9	2273	16.333	GFL09-2M □□□180C32	406
	83	3.1	100	2.9	146	2.6	2449	17.600	GFL14-2M □□□180C32	406
	82	1.5	99	1.4	144	1.3	2493	17.920	GFL11-2M □□□180C32	406
	80	1.0	96	0.9	140	0.8	2561	18.407	GFL09-2M □□□180C32	406
	75	0.9	90	0.9			2736	19.667	GFL09-2M □□□180C32	406
	73	2.9	89	2.7	129	2.4	2775	19.948	GFL14-2M □□□180C32	406
	72	1.4	87	1.4	127	1.2	2822	20.286	GFL11-2M □□□180C32	406
	66	0.9	80	0.8			3084	22.164	GFL09-2M □□□180C32	406
	65	2.9	79	2.7	115	2.4	3127	22.476	GFL14-2M □□□180C32	406
	64	1.3	77	1.2	113	1.1	3180	22.857	GFL11-2M □□□180C32	406
	61	0.8	73	0.8			3355	24.111	GFL09-2M □□□180C32	406
	60	2.6	72	2.6	105	2.5	3403	24.456	GFL14-2M □□□180C32	406
	59	1.2	71	1.2	104	1.2	3457	24.850	GFL11-2M □□□180C32	406
	53	2.6	64	2.6	93	2.5	3834	27.556	GFL14-2M □□□180C32	406
	52	1.1	63	1.1	92	1.0	3896	28.000	GFL11-2M □□□180C32	406
	45	1.0	54	1.0	79	1.0	4555	32.739	GFL11-2M □□□180C32	406
	45	2.1	55	2.1	80	2.0	4500	32.344	GFL14-2M □□□180C32	406
	40	0.9	48	0.9	70	0.9	5132	36.889	GFL11-2M □□□180C32	406
	40	2.1	48	2.1	71	2.0	5071	36.444	GFL14-2M □□□180C32	406
	37	1.8	45	1.8	65	1.7	5515	39.642	GFL14-2M □□□180C32	406
	36	0.9	44	0.9	64	0.8	5598	40.233	GFL11-2M □□□180C32	406
	33	1.8	40	1.8	58	1.7	6215	44.667	GFL14-2M □□□180C32	406

50 Hz: P_N=22.0 kW
60 Hz: P_N=26.4 kW
87 Hz: P_N=38.7 kW

n_N	1465 r/min		1765 r/min		2560 r/min		M_2 [Nm]	i		
f_N	50 Hz		60 Hz		87 Hz					
P_N	22.0 kW		26.4 kW		38.7 kW					
	n_2 [r/min]	c	n_2 [r/min]	c	n_2 [r/min]	c				
	28	1.4	34	1.4	50	1.3	7244	52.067	GFL14-2M □□□180C32	406
	25	1.4	30	1.4	44	1.3	8162	58.667	GFL14-2M □□□180C32	406
	23	1.1	28	1.1	41	1.1	8792	63.190	GFL14-2M □□□180C32	406
	21	1.1	25	1.1	36	1.1	9906	71.200	GFL14-2M □□□180C32	406

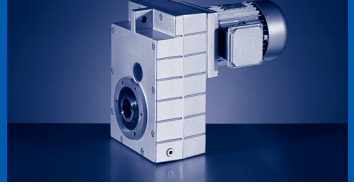

50 Hz: P_N=30.0 kW
60 Hz: P_N=36.0 kW
87 Hz: P_N=52.7 kW

n_N	1465 r/min		1765 r/min		2565 r/min		M_2 [Nm]	i		
f_N	50 Hz		60 Hz		87 Hz					
P_N	30.0 kW		36.0 kW		52.7 kW					
	n_2 [r/min]	c	n_2 [r/min]	c	n_2 [r/min]	c				
	213	1.6	257	1.5			1302	6.864	GFL09-2M □□□180C42	406
	213	2.3	257	2.2			1302	6.864	GFL11-2M □□□180C42	406
	196	1.5	236	1.4			1416	7.466	GFL09-2M □□□180C42	406
	196	2.3	236	2.2			1416	7.466	GFL11-2M □□□180C42	406
	167	2.3	201	2.2			1670	8.800	GFL14-2M □□□180C42	406
	163	1.3	196	1.2			1709	9.010	GFL09-2M □□□180C42	406
	163	2.1	196	2.0			1709	9.010	GFL11-2M □□□180C42	406
	153	2.3	184	2.2			1816	9.571	GFL14-2M □□□180C42	406
	150	1.2	180	1.2			1859	9.799	GFL09-2M □□□180C42	406
	150	2.0	180	1.9			1859	9.799	GFL11-2M □□□180C42	406
	137	1.9	165	1.8			2034	10.720	GFL11-2M □□□180C42	406
	131	1.1	158	1.0			2119	11.167	GFL09-2M □□□180C42	406
	119	1.0	143	0.9			2335	12.307	GFL09-2M □□□180C42	406
	117	1.5	141	1.4			2368	12.480	GFL11-2M □□□180C42	406
	103	2.3	124	2.2			2694	14.200	GFL14-2M □□□180C42	406
	102	0.9	123	0.8			2719	14.333	GFL09-2M □□□180C42	406
	101	1.4	121	1.3			2758	14.538	GFL11-2M □□□180C42	406
	94	2.3	113	2.2			2964	15.620	GFL14-2M □□□180C42	406
	92	1.3	111	1.2			3017	15.904	GFL11-2M □□□180C42	406
	83	2.3	100	2.2			3339	17.600	GFL14-2M □□□180C42	406
	82	1.1	99	1.1			3400	17.920	GFL11-2M □□□180C42	406
	73	2.1	89	2.0			3785	19.948	GFL14-2M □□□180C42	406
	72	1.1	87	1.0			3849	20.286	GFL11-2M □□□180C42	406
	65	2.1	79	2.0			4264	22.476	GFL14-2M □□□180C42	406
	64	0.9	77	0.9			4337	22.857	GFL11-2M □□□180C42	406
	60	1.9	72	1.9			4640	24.456	GFL14-2M □□□180C42	406
	59	0.9	71	0.9			4715	24.850	GFL11-2M □□□180C42	406
	53	1.9	64	1.9			5228	27.556	GFL14-2M □□□180C42	406
	52	0.8	63	0.8			5312	28.000	GFL11-2M □□□180C42	406
	45	1.5	55	1.5			6137	32.344	GFL14-2M □□□180C42	406
	40	1.5	48	1.5			6915	36.444	GFL14-2M □□□180C42	406
	37	1.3	45	1.3			7521	39.642	GFL14-2M □□□180C42	406
	33	1.3	40	1.3			8474	44.667	GFL14-2M □□□180C42	406
	28	1.0	34	1.0			9878	52.067	GFL14-2M □□□180C42	406
	25	1.0	30	1.0			11131	58.667	GFL14-2M □□□180C42	406
	23	0.8	28	0.8			11989	63.190	GFL14-2M □□□180C42	406

50 Hz: P_N=37.0 kW
60 Hz: P_N=45.0 kW

n_N	1475 r/min		1770 r/min				M_2 [Nm]	i		
f_N	50 Hz		60 Hz							
P_N	37.0 kW		45.0 kW							
	n_2 [r/min]	c	n_2 [r/min]	c						
	215	2.1	258	2.0			1595	6.864	GFL11-2M □□□225C12	406
	198	2.0	237	1.9			1735	7.466	GFL11-2M □□□225C12	406
	168	3.1	201	3.0			2045	8.800	GFL14-2M □□□225C12	406
	164	1.8	197	1.7			2094	9.010	GFL11-2M □□□225C12	406
	154	3.1	185	3.0			2225	9.571	GFL14-2M □□□225C12	406
	151	1.7	181	1.6			2278	9.799	GFL11-2M □□□225C12	406
	138	1.5	165	1.5			2491	10.720	GFL11-2M □□□225C12	406
	128	3.1	153	2.9			2681	11.538	GFL14-2M □□□225C12	406
	118	1.2	142	1.1			2901	12.480	GFL11-2M □□□225C12	406
	114	2.8	136	2.7			3021	13.000	GFL14-2M □□□225C12	406
	104	2.7	125	2.5			3300	14.200	GFL14-2M □□□225C12	406
	102	1.1	122	1.0			3379	14.538	GFL11-2M □□□225C12	406
	94	2.5	113	2.4			3630	15.620	GFL14-2M □□□225C12	406
	93	1.0	111	1.0			3696	15.904	GFL11-2M □□□225C12	406
	84	2.3	101	2.1			4090	17.600	GFL14-2M □□□225C12	406
	82	0.9	99	0.9			4165	17.920	GFL11-2M □□□225C12	406
	74	2.1	89	2.0			4636	19.948	GFL14-2M □□□225C12	406
	73	0.9	87	0.8			4715	20.286	GFL11-2M □□□225C12	406
	66	1.9	79	1.8			5224	22.476	GFL14-2M □□□225C12	406
	60	1.8	72	1.8			5684	24.456	GFL14-2M □□□225C12	406
	54	1.6	64	1.6			6404	27.556	GFL14-2M □□□225C12	406
	46	1.5	55	1.5			7517	32.344	GFL14-2M □□□225C12	406
	41	1.3	49	1.3			8470	36.444	GFL14-2M □□□225C12	406

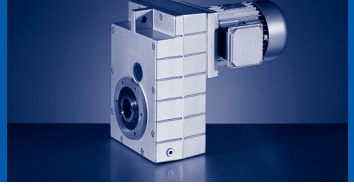

50 Hz: P_N=45.0 kW
60 Hz: P_N=54.0 kW

n_N	1480 r/min		1775 r/min				M_2 [Nm]	i		
f_N	50 Hz		60 Hz							
P_N	45.0 kW		54.0 kW							
	n_2 [r/min]	c	n_2 [r/min]	c						
	216	1.7	259	1.6			1934	6.864	GFL11-2M □□□225C22	406
	207	2.7	248	2.6			2014	7.150	GFL14-2M □□□225C22	406
	198	1.7	238	1.6			2103	7.466	GFL11-2M □□□225C22	406
	190	2.7	228	2.6			2191	7.777	GFL14-2M □□□225C22	406
	168	2.6	202	2.5			2479	8.800	GFL14-2M □□□225C22	406
	164	1.5	197	1.4			2538	9.010	GFL11-2M □□□225C22	406
	155	2.6	186	2.5			2696	9.571	GFL14-2M □□□225C22	406
	151	1.4	181	1.3			2761	9.799	GFL11-2M □□□225C22	406
	138	1.3	166	1.2			3020	10.720	GFL11-2M □□□225C22	406
	128	2.5	154	2.4			3250	11.538	GFL14-2M □□□225C22	406
	119	1.0	142	0.9			3516	12.480	GFL11-2M □□□225C22	406
	114	2.3	137	2.2			3662	13.000	GFL14-2M □□□225C22	406
	104	2.2	125	2.1			4000	14.200	GFL14-2M □□□225C22	406
	102	0.9	122	0.9			4096	14.538	GFL11-2M □□□225C22	406
	95	2.1	114	2.0			4400	15.620	GFL14-2M □□□225C22	406
	93	0.9	112	0.8			4480	15.904	GFL11-2M □□□225C22	406
	84	1.9	101	1.8			4958	17.600	GFL14-2M □□□225C22	406
	74	1.8	89	1.7			5619	19.948	GFL14-2M □□□225C22	406
	66	1.6	79	1.5			6332	22.476	GFL14-2M □□□225C22	406
	61	1.5	73	1.5			6889	24.456	GFL14-2M □□□225C22	406
	54	1.4	65	1.4			7763	27.556	GFL14-2M □□□225C22	406
	46	1.2	55	1.2			9112	32.344	GFL14-2M □□□225C22	406
	41	1.1	49	1.1			10267	36.444	GFL14-2M □□□225C22	406

50 Hz: P_N=0.75 kW
60 Hz: P_N=0.92 kW
87 Hz: P_N=1.35 kW

n_N	1410 r/min		1710 r/min		2520 r/min		M_2 [Nm]	i		
f_N	50 Hz		60 Hz		87 Hz					
P_N	0.75 kW		0.92 kW		1.35 kW					
	n_2 [r/min]	c	n_2 [r/min]	c	n_2 [r/min]	c				
	385	4.2	467	4.0	689	3.5	18	3.659	GFL04-2M □□□080C32	422
	281	4.2	341	4.0	502	3.5	25	5.018	GFL04-2M □□□080C32	422
	242	4.2	293	4.0	432	3.5	29	5.833	GFL04-2M □□□080C32	422
	220	3.6	266	3.4	392	3.0	32	6.422	GFL04-2M □□□080C32	422
	201	3.3	243	3.1	359	2.7	35	7.025	GFL04-2M □□□080C32	422
	168	4.2	204	4.0	301	3.5	41	8.379	GFL04-2M □□□080C32	422
	151	3.6	183	3.4	270	3.0	46	9.333	GFL04-2M □□□080C32	422
	138	3.2	167	3.0	246	2.7	51	10.238	GFL04-2M □□□080C32	422
	123	3.2	149	3.1	219	2.7	57	11.491	GFL04-2M □□□080C32	422
	110	2.6	134	2.5	197	2.2	63	12.800	GFL04-2M □□□080C32	422
	96	2.5	116	2.4	171	2.1	73	14.706	GFL04-2M □□□080C32	422
	88	2.3	106	2.2	157	1.9	79	16.087	GFL04-2M □□□080C32	422
	79	1.9	95	1.8	141	1.6	88	17.920	GFL04-2M □□□080C32	422
	69	1.8	83	1.7	123	1.5	101	20.519	GFL04-2M □□□080C32	422
	62	1.5	75	1.4	110	1.3	113	22.857	GFL04-2M □□□080C32	422
	62	2.8	75	2.7	110	2.3	113	22.857	GFL05-2M □□□080C32	422
	57	2.8	69	2.8	101	2.7	123	24.850	GFL05-2M □□□080C32	422
	56	1.5	68	1.5	100	1.4	124	25.136	GFL04-2M □□□080C32	422
	50	1.2	61	1.2	90	1.2	138	28.000	GFL04-2M □□□080C32	422
	50	2.3	61	2.3	90	2.2	138	28.000	GFL05-2M □□□080C32	422
	45	1.2	54	1.2	80	1.1	156	31.600	GFL04-2M □□□080C32	422
	44	2.2	53	2.2	78	2.1	159	32.344	GFL05-2M □□□080C32	422
	40	1.0	49	1.0	72	0.9	174	35.200	GFL04-2M □□□080C32	422
	39	1.8	47	1.8	69	1.7	180	36.444	GFL05-2M □□□080C32	422
	35	0.9	42	0.9	62	0.9	201	40.697	GFL04-2M □□□080C32	422
	35	1.7	43	1.7	63	1.7	198	40.233	GFL05-2M □□□080C32	422
	35	2.9	42	2.9	62	2.8	201	40.800	GFL06-2M □□□080C32	422
	31	1.4	38	1.4	56	1.4	223	45.333	GFL05-2M □□□080C32	422
	31	2.7	37	2.7	55	2.6	227	45.963	GFL06-2M □□□080C32	422
	27	1.2	33	1.2	48	1.2	257	52.067	GFL05-2M □□□080C32	422
	27	2.5	32	2.5	48	2.4	260	52.800	GFL06-2M □□□080C32	422
	27	2.9	33	2.9	48	2.8	257	52.067	GFL07-2M □□□080C32	422
	24	1.1	29	1.1	43	1.1	289	58.667	GFL05-2M □□□080C32	422
	24	2.1	29	2.1	42	2.0	293	59.481	GFL06-2M □□□080C32	422
	24	2.9	29	2.9	43	2.8	289	58.667	GFL07-2M □□□080C32	422
	22	0.9	27	0.9	40	0.9	311	63.190	GFL05-2M □□□080C32	422
	22	1.8	27	1.8	39	1.7	316	64.080	GFL06-2M □□□080C32	422
	22	2.5	27	2.5	40	2.4	311	63.190	GFL07-2M □□□080C32	422
	22	2.8	26	2.8	39	2.8	317	65.306	GFL07-3M □□□080C32	430
	21	1.5	26	1.5	38	1.5	321	66.213	GFL06-3M □□□080C32	430
	20	0.9	24	0.9	35	0.9	351	71.200	GFL05-2M □□□080C32	422

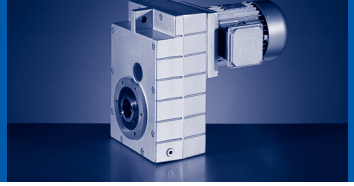

50 Hz: P_N=0.75 kW
60 Hz: P_N=0.92 kW
87 Hz: P_N=1.35 kW

n_N	1410 r/min		1710 r/min		2520 r/min		M_2 [Nm]	i		
f_N	50 Hz		60 Hz		87 Hz					
P_N	0.75 kW		0.92 kW		1.35 kW					
	n_2 [r/min]	c	n_2 [r/min]	c	n_2 [r/min]	c				
	20	1.4	24	1.4	35	1.4	350	72.000	GFL06-3M □□□080C32	430
	20	1.7	24	1.7	35	1.7	356	72.189	GFL06-2M □□□080C32	422
	20	2.5	24	2.5	35	2.5	351	71.200	GFL07-2M □□□080C32	422
	20	2.5	24	2.5	35	2.5	352	72.452	GFL07-3M □□□080C32	430
	18	2.0	21	2.0	32	2.0	394	79.875	GFL07-2M □□□080C32	422
	17	1.1	21	1.1	31	1.1	399	81.000	GFL06-2M □□□080C32	422
	17	1.3	21	1.3	31	1.3	394	81.111	GFL06-3M □□□080C32	430
	17	2.5	21	2.5	31	2.5	396	81.636	GFL07-3M □□□080C32	430
	16	1.1	19	1.1	29	1.1	428	88.200	GFL06-3M □□□080C32	430
	16	1.1	19	1.1	28	1.1	450	91.250	GFL06-2M □□□080C32	422
	16	2.0	19	2.0	28	2.0	444	90.000	GFL07-2M □□□080C32	422
	15	2.1	19	2.1	27	2.1	449	92.413	GFL07-3M □□□080C32	430
	14	1.1	17	1.1	25	1.1	482	99.361	GFL06-3M □□□080C32	430
	14	2.1	16	2.1	24	2.1	506	104.127	GFL07-3M □□□080C32	430
	13	1.9	15	1.9	22	1.9	550	113.206	GFL07-3M □□□080C32	430
	12	0.9	15	0.9	22	0.9	566	116.571	GFL06-3M □□□080C32	430
	11	0.9	13	0.9	19	0.9	638	131.323	GFL06-3M □□□080C32	430
	11	1.9	13	1.9	20	1.9	619	127.556	GFL07-3M □□□080C32	430
	9.6	1.6	12	1.6	17	1.6	715	147.347	GFL07-3M □□□080C32	430
	9.5	2.8	12	2.8	17	2.8	722	148.815	GFL09-3M □□□080C32	430
	8.5	1.6	10	1.6	15	1.6	806	166.025	GFL07-3M □□□080C32	430
	8.4	2.8	10	2.8	15	2.8	814	167.712	GFL09-3M □□□080C32	430
	7.7	1.4	9.3	1.4	14	1.4	890	183.285	GFL07-3M □□□080C32	430
	7.6	2.5	9.2	2.5	14	2.5	899	185.111	GFL09-3M □□□080C32	430
	6.8	1.2	8.3	1.2	12	1.2	1003	206.519	GFL07-3M □□□080C32	430
	6.8	2.5	8.2	2.5	12	2.5	1013	208.617	GFL09-3M □□□080C32	430
	6.3	1.2	7.6	1.2	11	1.2	1090	224.636	GFL07-3M □□□080C32	430
	6.3	2.2	7.6	2.2	11	2.2	1091	224.778	GFL09-3M □□□080C32	430
	5.6	1.0	6.8	1.0	10	1.0	1229	253.111	GFL07-3M □□□080C32	430
	5.6	2.2	6.8	2.2	10	2.2	1230	253.321	GFL09-3M □□□080C32	430
	4.9	1.0	5.9	1.0	8.7	1.0	1411	290.706	GFL07-3M □□□080C32	430
	4.9	1.9	5.9	1.9	8.7	1.9	1412	290.889	GFL09-3M □□□080C32	430
	4.3	1.9	5.2	1.9	7.7	1.9	1591	327.827	GFL09-3M □□□080C32	430
	4	0.8	4.9	0.8	7.1	0.8	1713	352.811	GFL07-3M □□□080C32	430
	4	1.6	4.8	1.6	7.1	1.6	1714	353.033	GFL09-3M □□□080C32	430
	3.9	2.5	4.8	2.5	7	2.5	1738	358.077	GFL11-3M □□□080C32	430
	3.5	1.6	4.3	1.6	6.3	1.6	1931	397.863	GFL09-3M □□□080C32	430
	3.5	2.5	4.2	2.5	6.3	2.5	1959	403.467	GFL11-3M □□□080C32	430
	3.3	1.3	4	1.3	5.9	1.3	2059	424.247	GFL09-3M □□□080C32	430
	3.3	2.9	4	2.9	5.9	2.9	2088	430.222	GFL11-3M □□□080C32	430
	2.7	1.1	3.3	1.1	4.9	1.1	2499	514.881	GFL09-3M □□□080C32	430

50 Hz: P_N=0.75 kW
60 Hz: P_N=0.92 kW
87 Hz: P_N=1.35 kW

n_N	1410 r/min		1710 r/min		2520 r/min		M_2 [Nm]	i		
f_N	50 Hz		60 Hz		87 Hz					
P_N	0.75 kW		0.92 kW		1.35 kW					
	n_2 [r/min]	c	n_2 [r/min]	c	n_2 [r/min]	c				
	2.7	2.3	3.3	2.3	4.8	2.3	2535	522.133	GFL11-3M □□□080C32	430
	2.5	2.0	3	2.0	4.5	2.0	2730	562.391	GFL11-3M □□□080C32	430
	2.2	1.9	2.7	1.9	4	1.9	3076	633.680	GFL11-3M □□□080C32	430
	1.8	1.5	2.1	1.5	3.2	1.5	3888	801.000	GFL11-3M □□□080C32	430

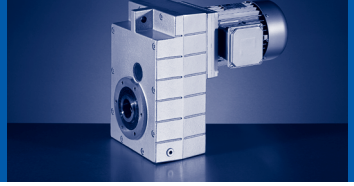

50 Hz: P_N=1.1 kW
60 Hz: P_N=1.3 kW
87 Hz: P_N=2.0 kW

n_N	1430 r/min		1730 r/min		2540 r/min		M_2 [Nm]	i		
f_N	50 Hz		60 Hz		87 Hz					
P_N	1.1 kW		1.3 kW		2.0 kW					
	n_2 [r/min]	c	n_2 [r/min]	c	n_2 [r/min]	c				
	391	4.2	473	4.0	694	3.5	26	3.659	GFL04-2M □□□090C12	426
	313	5.2	378	5.0	556	4.4	33	4.571	GFL05-2M □□□090C12	422
	285	3.1	345	3.0	506	2.6	36	5.018	GFL04-2M □□□090C12	426
	245	3.7	297	3.5	435	3.1	42	5.833	GFL04-2M □□□090C12	426
	223	2.5	269	2.3	396	2.1	46	6.422	GFL04-2M □□□090C12	426
	204	2.3	246	2.2	362	1.9	50	7.025	GFL04-2M □□□090C12	426
	171	3.0	207	2.9	303	2.5	60	8.379	GFL04-2M □□□090C12	426
	153	2.5	185	2.4	272	2.1	67	9.333	GFL04-2M □□□090C12	426
	140	2.2	169	2.1	248	1.8	73	10.238	GFL04-2M □□□090C12	426
	124	2.2	151	2.1	221	1.9	82	11.491	GFL04-2M □□□090C12	426
	112	1.8	135	1.7	198	1.5	91	12.800	GFL04-2M □□□090C12	426
	112	3.1	135	3.0	198	2.6	91	12.800	GFL05-2M □□□090C12	422
	98	2.9	119	2.8	175	2.4	104	14.538	GFL05-2M □□□090C12	422
	97	1.7	118	1.7	173	1.5	105	14.706	GFL04-2M □□□090C12	426
	90	2.7	109	2.6	160	2.3	113	15.904	GFL05-2M □□□090C12	422
	89	1.6	108	1.5	158	1.3	115	16.087	GFL04-2M □□□090C12	426
	80	1.3	97	1.3	142	1.1	128	17.920	GFL04-2M □□□090C12	426
	80	2.4	97	2.3	142	2.1	128	17.920	GFL05-2M □□□090C12	422
	71	2.3	85	2.2	125	1.9	145	20.286	GFL05-2M □□□090C12	422
	70	1.3	84	1.2	124	1.1	146	20.519	GFL04-2M □□□090C12	426
	63	1.0	76	1.0	111	0.9	163	22.857	GFL04-2M □□□090C12	426
	63	1.9	76	1.8	111	1.6	163	22.857	GFL05-2M □□□090C12	422
	58	1.9	70	1.9	102	1.9	177	24.850	GFL05-2M □□□090C12	422
	57	1.0	69	1.0	101	1.0	179	25.136	GFL04-2M □□□090C12	426
	51	0.8	62	0.8	91	0.8	200	28.000	GFL04-2M □□□090C12	426
	51	1.6	62	1.6	91	1.5	200	28.000	GFL05-2M □□□090C12	422
	50	3.0	61	3.0	90	2.9	202	28.389	GFL06-2M □□□090C12	422
	44	1.5	54	1.5	79	1.4	231	32.344	GFL05-2M □□□090C12	422
	44	2.7	53	2.7	77	2.6	234	32.800	GFL06-2M □□□090C12	422
	39	1.2	48	1.2	70	1.2	260	36.444	GFL05-2M □□□090C12	422
	39	2.3	47	2.3	69	2.2	263	36.951	GFL06-2M □□□090C12	422
	36	1.2	43	1.2	63	1.2	287	40.233	GFL05-2M □□□090C12	422
	35	2.3	42	2.3	62	2.2	291	40.800	GFL06-2M □□□090C12	422
	32	1.0	38	1.0	56	0.9	323	45.333	GFL05-2M □□□090C12	422
	31	1.9	38	1.9	55	1.8	328	45.963	GFL06-2M □□□090C12	422
	27	1.8	33	1.8	48	1.7	376	52.800	GFL06-2M □□□090C12	422
	24	1.5	29	1.5	43	1.4	424	59.481	GFL06-2M □□□090C12	422
	24	3.0	30	3.0	43	2.9	418	58.667	GFL07-2M □□□090C12	422
	23	2.8	27	2.8	40	2.6	450	63.190	GFL07-2M □□□090C12	422
	22	1.1	26	1.1	38	1.1	465	66.213	GFL06-3M □□□090C12	430
	22	1.3	27	1.3	40	1.2	457	64.080	GFL06-2M □□□090C12	422

50 Hz: P_N=1.1 kW
60 Hz: P_N=1.3 kW
87 Hz: P_N=2.0 kW

n_N	1430 r/min		1730 r/min		2540 r/min		M_2 [Nm]	i		
f_N	50 Hz		60 Hz		87 Hz					
P_N	1.1 kW		1.3 kW		2.0 kW					
	n_2 [r/min]	c	n_2 [r/min]	c	n_2 [r/min]	c				
	22	1.9	27	1.9	39	1.9	458	65.306	GFL07-3M □□□090C12	430
	20	1.0	24	1.0	35	1.0	505	72.000	GFL06-3M □□□090C12	430
	20	1.2	24	1.2	35	1.2	515	72.189	GFL06-2M □□□090C12	422
	20	1.7	24	1.7	35	1.7	509	72.452	GFL07-3M □□□090C12	430
	20	2.5	24	2.5	36	2.5	507	71.200	GFL07-2M □□□090C12	422
	20	3.0	24	3.0	35	3.0	514	73.173	GFL09-3M □□□090C12	430
	18	0.9	21	0.9	31	0.9	569	81.111	GFL06-3M □□□090C12	430
	18	1.5	22	1.5	32	1.5	569	79.875	GFL07-2M □□□090C12	422
	18	1.7	21	1.7	31	1.7	573	81.636	GFL07-3M □□□090C12	430
	18	2.7	22	2.7	32	2.7	561	78.750	GFL09-2M □□□090C12	422
	17	3.0	21	3.0	31	3.0	579	82.465	GFL09-3M □□□090C12	430
	16	1.5	19	1.5	28	1.5	649	92.413	GFL07-3M □□□090C12	430
	16	1.5	19	1.5	28	1.5	641	90.000	GFL07-2M □□□090C12	422
	16	2.7	20	2.7	29	2.7	633	88.750	GFL09-2M □□□090C12	422
	15	2.6	19	2.6	27	2.6	655	93.333	GFL09-3M □□□090C12	430
	14	1.5	17	1.5	24	1.5	731	104.127	GFL07-3M □□□090C12	430
	14	2.6	16	2.6	24	2.6	738	105.185	GFL09-3M □□□090C12	430
	13	1.3	15	1.3	22	1.3	795	113.206	GFL07-3M □□□090C12	430
	13	2.3	15	2.3	22	2.3	803	114.333	GFL09-3M □□□090C12	430
	11	1.3	14	1.3	20	1.3	895	127.556	GFL07-3M □□□090C12	430
	11	2.3	13	2.3	20	2.3	905	128.852	GFL09-3M □□□090C12	430
	9.7	1.1	12	1.1	17	1.1	1034	147.347	GFL07-3M □□□090C12	430
	9.6	2.0	12	2.0	17	2.0	1045	148.815	GFL09-3M □□□090C12	430
	8.6	1.1	10	1.1	15	1.1	1166	166.025	GFL07-3M □□□090C12	430
	8.5	2.0	10	2.0	15	2.0	1177	167.712	GFL09-3M □□□090C12	430
	7.8	1.0	9.4	1.0	14	1.0	1287	183.285	GFL07-3M □□□090C12	430
	7.7	1.7	9.4	1.7	14	1.7	1300	185.111	GFL09-3M □□□090C12	430
	6.9	0.9	8.4	0.9	12	0.9	1450	206.519	GFL07-3M □□□090C12	430
	6.9	1.7	8.3	1.7	12	1.7	1465	208.617	GFL09-3M □□□090C12	430
	6.4	0.9	7.7	0.9	11	0.9	1577	224.636	GFL07-3M □□□090C12	430
	6.4	1.5	7.7	1.5	11	1.5	1578	224.778	GFL09-3M □□□090C12	430
	6.4	2.9	7.7	2.9	11	2.9	1577	224.636	GFL11-3M □□□090C12	430
	5.7	1.5	6.8	1.5	10	1.5	1778	253.321	GFL09-3M □□□090C12	430
	5.7	2.9	6.8	2.9	10	2.9	1777	253.111	GFL11-3M □□□090C12	430
	5.4	2.7	6.5	2.7	9.5	2.7	1876	267.259	GFL11-3M □□□090C12	430
	4.9	1.3	6	1.3	8.7	1.3	2042	290.889	GFL09-3M □□□090C12	430
	4.4	1.3	5.3	1.3	7.8	1.3	2301	327.827	GFL09-3M □□□090C12	430
	4.4	2.4	5.3	2.4	7.8	2.4	2299	327.556	GFL11-3M □□□090C12	430
	4.1	1.1	4.9	1.1	7.2	1.1	2478	353.033	GFL09-3M □□□090C12	430
	4	2.1	4.8	2.1	7.1	2.1	2514	358.077	GFL11-3M □□□090C12	430
	3.6	1.1	4.4	1.1	6.4	1.1	2793	397.863	GFL09-3M □□□090C12	430

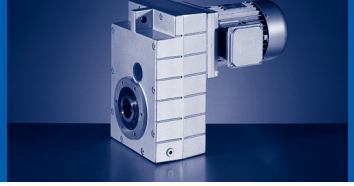

50 Hz: P_N=1.1 kW
60 Hz: P_N=1.3 kW
87 Hz: P_N=2.0 kW

n_N	1430 r/min		1730 r/min		2540 r/min		M_2 [Nm]	i		
f_N	50 Hz		60 Hz		87 Hz					
P_N	1.1 kW		1.3 kW		2.0 kW					
	n_2 [r/min]	c	n_2 [r/min]	c	n_2 [r/min]	c				
	3.5	2.1	4.3	2.1	6.3	2.1	2832	403.467	GFL11-3M □□□090C12	430
	3.4	0.9	4.1	0.9	6	0.9	2978	424.247	GFL09-3M □□□090C12	430
	3.3	2.0	4	2.0	5.9	2.0	3020	430.222	GFL11-3M □□□090C12	430
	2.7	1.6	3.3	1.6	4.9	1.6	3665	522.133	GFL11-3M □□□090C12	430
	2.7	2.9	3.3	2.9	4.9	2.9	3665	522.133	GFL14-3M □□□090C12	430
	2.5	1.4	3.1	1.4	4.5	1.4	3948	562.391	GFL11-3M □□□090C12	430
	2.5	2.3	3.1	2.3	4.5	2.3	3948	562.391	GFL14-3M □□□090C12	430
	2.3	1.3	2.7	1.3	4	1.3	4448	633.680	GFL11-3M □□□090C12	430
	2.3	2.2	2.7	2.2	4	2.2	4448	633.680	GFL14-3M □□□090C12	430
	1.8	1.0	2.2	1.0	3.2	1.0	5623	801.000	GFL11-3M □□□090C12	430
	1.8	1.7	2.2	1.7	3.2	1.7	5623	801.000	GFL14-3M □□□090C12	430

50 Hz: P_N=1.5 kW
60 Hz: P_N=1.8 kW
87 Hz: P_N=2.7 kW

n_N	1435 r/min		1735 r/min		2545 r/min		M_2 [Nm]	i		
f_N	50 Hz		60 Hz		87 Hz					
P_N	1.5 kW		1.8 kW		2.7 kW					
	n_2 [r/min]	c	n_2 [r/min]	c	n_2 [r/min]	c				
	392	3.1	474	2.9	696	2.6	35	3.659	GFL04-2M □□□090C32	426
	314	3.8	380	3.7	557	3.2	44	4.571	GFL05-2M □□□090C32	422
	286	2.3	346	2.2	507	1.9	49	5.018	GFL04-2M □□□090C32	426
	246	2.7	297	2.6	436	2.3	57	5.833	GFL04-2M □□□090C32	426
	224	2.8	271	2.7	398	2.3	62	6.400	GFL05-2M □□□090C32	422
	223	1.8	270	1.7	396	1.5	62	6.422	GFL04-2M □□□090C32	426
	204	1.7	247	1.6	362	1.4	68	7.025	GFL04-2M □□□090C32	426
	171	2.2	207	2.1	304	1.8	81	8.379	GFL04-2M □□□090C32	426
	159	3.0	193	2.9	283	2.6	87	9.010	GFL05-2M □□□090C32	422
	154	1.8	186	1.7	273	1.5	90	9.333	GFL04-2M □□□090C32	426
	144	2.9	174	2.7	256	2.4	96	9.946	GFL05-2M □□□090C32	422
	140	1.6	170	1.5	249	1.4	99	10.238	GFL04-2M □□□090C32	426
	126	2.5	153	2.4	224	2.1	110	11.360	GFL05-2M □□□090C32	422
	125	1.6	151	1.6	222	1.4	111	11.491	GFL04-2M □□□090C32	426
	112	1.3	136	1.3	199	1.1	124	12.800	GFL04-2M □□□090C32	426
	112	2.3	136	2.2	199	1.9	124	12.800	GFL05-2M □□□090C32	422
	99	2.1	119	2.0	175	1.8	141	14.538	GFL05-2M □□□090C32	422
	98	1.3	118	1.2	173	1.1	142	14.706	GFL04-2M □□□090C32	426
	90	2.0	109	1.9	160	1.7	154	15.904	GFL05-2M □□□090C32	422
	89	1.2	108	1.1	158	1.0	156	16.087	GFL04-2M □□□090C32	426
	80	1.0	97	0.9	142	0.8	174	17.920	GFL04-2M □□□090C32	426
	80	1.8	97	1.7	142	1.5	174	17.920	GFL05-2M □□□090C32	422
	71	1.7	86	1.6	126	1.4	197	20.286	GFL05-2M □□□090C32	422
	70	0.9	85	0.9			199	20.519	GFL04-2M □□□090C32	426
	70	3.2	84	3.1	124	2.7	199	20.571	GFL06-2M □□□090C32	422
	63	1.4	76	1.4	111	1.2	221	22.857	GFL05-2M □□□090C32	422
	62	2.7	75	2.6	110	2.3	224	23.175	GFL06-2M □□□090C32	422
	58	1.4	70	1.4	102	1.4	241	24.850	GFL05-2M □□□090C32	422
	57	2.7	69	2.7	101	2.5	244	25.200	GFL06-2M □□□090C32	422
	51	1.2	62	1.2	91	1.1	271	28.000	GFL05-2M □□□090C32	422
	51	2.2	61	2.2	90	2.1	275	28.389	GFL06-2M □□□090C32	422
	44	1.1	54	1.1	79	1.1	313	32.344	GFL05-2M □□□090C32	422
	44	2.0	53	2.0	78	1.9	318	32.800	GFL06-2M □□□090C32	422
	39	0.9	48	0.9	70	0.9	353	36.444	GFL05-2M □□□090C32	422
	39	1.7	47	1.7	69	1.6	358	36.951	GFL06-2M □□□090C32	422
	36	0.9	43	0.9	63	0.8	390	40.233	GFL05-2M □□□090C32	422
	36	2.9	44	2.9	64	2.8	384	39.642	GFL07-2M □□□090C32	422
	35	1.7	43	1.7	62	1.6	395	40.800	GFL06-2M □□□090C32	422
	32	2.9	39	2.9	57	2.8	433	44.667	GFL07-2M □□□090C32	422
	31	1.4	38	1.4	55	1.3	445	45.963	GFL06-2M □□□090C32	422
	28	2.4	33	2.4	49	2.3	504	52.067	GFL07-2M □□□090C32	422

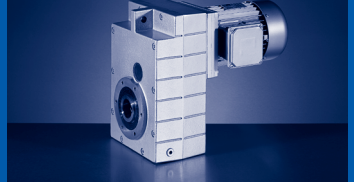

50 Hz: P_N=1.5 kW
60 Hz: P_N=1.8 kW
87 Hz: P_N=2.7 kW

n_N	1435 r/min		1735 r/min		2545 r/min		M_2 [Nm]	i		
f_N	50 Hz		60 Hz		87 Hz					
P_N	1.5 kW		1.8 kW		2.7 kW					
	n_2 [r/min]	c	n_2 [r/min]	c	n_2 [r/min]	c				
	28	2.9	34	2.9	50	2.8	497	51.333	GFL09-2M □□□090C32	422
	27	1.3	33	1.3	48	1.2	511	52.800	GFL06-2M □□□090C32	422
	25	2.2	30	2.2	43	2.1	568	58.667	GFL07-2M □□□090C32	422
	25	2.9	30	2.9	44	2.8	560	57.852	GFL09-2M □□□090C32	422
	24	1.1	29	1.1	43	1.0	576	59.481	GFL06-2M □□□090C32	422
	23	2.0	28	2.0	40	1.9	612	63.190	GFL07-2M □□□090C32	422
	23	2.5	27	2.5	40	2.4	604	63.326	GFL09-3M □□□090C32	430
	23	2.6	28	2.6	41	2.4	603	62.300	GFL09-2M □□□090C32	422
	22	0.9	27	0.9	40	0.9	621	64.080	GFL06-2M □□□090C32	422
	22	1.4	27	1.4	39	1.4	623	65.306	GFL07-3M □□□090C32	430
	20	0.9	24	0.9	35	0.9	699	72.189	GFL06-2M □□□090C32	422
	20	1.3	24	1.3	35	1.3	691	72.452	GFL07-3M □□□090C32	430
	20	1.9	24	1.9	36	1.9	690	71.200	GFL07-2M □□□090C32	422
	20	2.2	24	2.2	35	2.2	698	73.173	GFL09-3M □□□090C32	430
	20	2.6	25	2.6	36	2.6	680	70.211	GFL09-2M □□□090C32	422
	18	1.1	22	1.1	32	1.1	774	79.875	GFL07-2M □□□090C32	422
	18	1.3	21	1.3	31	1.3	779	81.636	GFL07-3M □□□090C32	430
	18	2.0	22	2.0	32	2.0	763	78.750	GFL09-2M □□□090C32	422
	17	2.2	21	2.2	31	2.2	787	82.465	GFL09-3M □□□090C32	430
	16	1.1	19	1.1	28	1.1	872	90.000	GFL07-2M □□□090C32	422
	16	1.1	19	1.1	28	1.1	882	92.413	GFL07-3M □□□090C32	430
	16	2.0	20	2.0	29	2.0	860	88.750	GFL09-2M □□□090C32	422
	15	1.9	19	1.9	27	1.9	890	93.333	GFL09-3M □□□090C32	430
	14	1.1	17	1.1	24	1.1	993	104.127	GFL07-3M □□□090C32	430
	14	1.9	17	1.9	24	1.9	1003	105.185	GFL09-3M □□□090C32	430
	13	1.0	15	1.0	23	1.0	1080	113.206	GFL07-3M □□□090C32	430
	13	1.7	15	1.7	22	1.7	1091	114.333	GFL09-3M □□□090C32	430
	11	1.0	14	1.0	20	1.0	1217	127.556	GFL07-3M □□□090C32	430
	11	1.7	14	1.7	20	1.7	1229	128.852	GFL09-3M □□□090C32	430
	9.7	0.8	12	0.8	17	0.8	1406	147.347	GFL07-3M □□□090C32	430
	9.6	1.5	12	1.5	17	1.5	1420	148.815	GFL09-3M □□□090C32	430
	9.6	2.7	12	2.7	17	2.7	1423	149.144	GFL11-3M □□□090C32	430
	8.6	1.5	10	1.5	15	1.5	1600	167.712	GFL09-3M □□□090C32	430
	8.5	2.7	10	2.7	15	2.7	1603	168.049	GFL11-3M □□□090C32	430
	7.9	2.4	9.5	2.4	14	2.4	1744	182.792	GFL11-3M □□□090C32	430
	7.8	1.3	9.4	1.3	14	1.3	1766	185.111	GFL09-3M □□□090C32	430
	7.1	2.9	8.6	2.9	13	2.9	1928	202.074	GFL14-3M □□□090C32	430
	7	2.4	8.4	2.4	12	2.4	1965	205.963	GFL11-3M □□□090C32	430
	6.9	1.3	8.3	1.3	12	1.3	1990	208.617	GFL09-3M □□□090C32	430
	6.4	1.1	7.7	1.1	11	1.1	2144	224.778	GFL09-3M □□□090C32	430
	6.4	2.1	7.7	2.1	11	2.1	2143	224.636	GFL11-3M □□□090C32	430

50 Hz: P_N=1.5 kW
60 Hz: P_N=1.8 kW
87 Hz: P_N=2.7 kW

n_N	1435 r/min		1735 r/min		2545 r/min		M_2 [Nm]	i		
f_N	50 Hz		60 Hz		87 Hz					
P_N	1.5 kW		1.8 kW		2.7 kW					
	n_2 [r/min]	c	n_2 [r/min]	c	n_2 [r/min]	c				
	5.7	1.1	6.9	1.1	10	1.1	2417	253.321	GFL09-3M □□□090C32	430
	5.7	2.1	6.9	2.1	10	2.1	2415	253.111	GFL11-3M □□□090C32	430
	5.4	2.0	6.5	2.0	9.5	2.0	2550	267.259	GFL11-3M □□□090C32	430
	4.9	1.0	6	1.0	8.8	1.0	2775	290.889	GFL09-3M □□□090C32	430
	4.4	1.0	5.3	1.0	7.8	1.0	3127	327.827	GFL09-3M □□□090C32	430
	4.4	1.8	5.3	1.8	7.8	1.8	3125	327.556	GFL11-3M □□□090C32	430
	4.1	0.8	4.9	0.8	7.2	0.8	3368	353.033	GFL09-3M □□□090C32	430
	4.1	2.6	4.9	2.6	7.2	2.6	3366	352.811	GFL14-3M □□□090C32	430
	4	1.6	4.9	1.6	7.1	1.6	3416	358.077	GFL11-3M □□□090C32	430
	3.6	0.8	4.4	0.8	6.4	0.8	3795	397.863	GFL09-3M □□□090C32	430
	3.6	1.6	4.3	1.6	6.3	1.6	3849	403.467	GFL11-3M □□□090C32	430
	3.6	2.6	4.4	2.6	6.4	2.6	3792	397.533	GFL14-3M □□□090C32	430
	3.3	1.5	4	1.5	5.9	1.5	4104	430.222	GFL11-3M □□□090C32	430
	3.3	2.6	4	2.6	5.9	2.6	4104	430.222	GFL14-3M □□□090C32	430
	2.8	1.2	3.3	1.2	4.9	1.2	4981	522.133	GFL11-3M □□□090C32	430
	2.8	2.1	3.3	2.1	4.9	2.1	4981	522.133	GFL14-3M □□□090C32	430
	2.6	1.0	3.1	1.0	4.5	1.0	5365	562.391	GFL11-3M □□□090C32	430
	2.6	1.7	3.1	1.7	4.5	1.7	5365	562.391	GFL14-3M □□□090C32	430
	2.3	1.0	2.7	1.0	4	1.0	6045	633.680	GFL11-3M □□□090C32	430
	2.3	1.6	2.7	1.6	4	1.6	6045	633.680	GFL14-3M □□□090C32	430
	1.8	1.3	2.2	1.3	3.2	1.3	7641	801.000	GFL14-3M □□□090C32	430

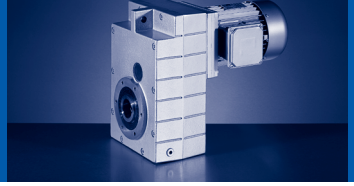

50 Hz: P_N=2.2 kW
60 Hz: P_N=2.6 kW
87 Hz: P_N=3.9 kW

n_N	1445 r/min		1745 r/min		2555 r/min		M_2 [Nm]	i		
f_N	50 Hz		60 Hz		87 Hz					
P_N	2.2 kW		2.6 kW		3.9 kW					
	n_2 [r/min]	c	n_2 [r/min]	c	n_2 [r/min]	c				
	434	3.5	524	3.4	767	3.0	47	3.333	GFL05-2M □□□100C12	422
	316	2.6	382	2.5	559	2.2	65	4.571	GFL05-2M □□□100C12	422
	282	3.1	340	2.9	498	2.6	72	5.133	GFL05-2M □□□100C12	422
	255	2.9	308	2.8	451	2.4	80	5.667	GFL05-2M □□□100C12	422
	226	1.9	273	1.8	399	1.6	90	6.400	GFL05-2M □□□100C12	422
	205	2.5	248	2.4	363	2.1	99	7.040	GFL05-2M □□□100C12	422
	186	2.4	225	2.2	329	2.0	110	7.771	GFL05-2M □□□100C12	422
	160	2.1	194	2.0	284	1.8	127	9.010	GFL05-2M □□□100C12	422
	145	2.0	176	1.9	257	1.6	140	9.946	GFL05-2M □□□100C12	422
	143	3.2	173	3.1	253	2.7	142	10.092	GFL06-2M □□□100C12	422
	127	1.7	154	1.7	225	1.5	160	11.360	GFL05-2M □□□100C12	422
	113	1.6	136	1.5	200	1.3	181	12.800	GFL05-2M □□□100C12	422
	111	3.2	135	3.1	197	2.7	183	12.978	GFL06-2M □□□100C12	422
	99	1.5	120	1.4	176	1.2	205	14.538	GFL05-2M □□□100C12	422
	98	3.1	118	2.9	173	2.6	208	14.743	GFL06-2M □□□100C12	422
	91	1.4	110	1.3	161	1.2	224	15.904	GFL05-2M □□□100C12	422
	90	2.8	108	2.7	158	2.4	228	16.128	GFL06-2M □□□100C12	422
	81	1.2	97	1.2	143	1.0	253	17.920	GFL05-2M □□□100C12	422
	80	2.3	96	2.2	141	2.0	256	18.169	GFL06-2M □□□100C12	422
	71	1.2	86	1.1	126	1.0	286	20.286	GFL05-2M □□□100C12	422
	70	2.2	85	2.1	124	1.9	290	20.571	GFL06-2M □□□100C12	422
	63	1.0	76	0.9	112	0.8	322	22.857	GFL05-2M □□□100C12	422
	62	1.9	75	1.8	110	1.6	327	23.175	GFL06-2M □□□100C12	422
	58	1.0	70	1.0	103	0.9	351	24.850	GFL05-2M □□□100C12	422
	57	1.8	69	1.8	101	1.7	356	25.200	GFL06-2M □□□100C12	422
	52	3.1	62	3.1	91	3.0	395	28.000	GFL07-2M □□□100C12	422
	51	1.5	62	1.5	90	1.4	400	28.389	GFL06-2M □□□100C12	422
	45	3.0	54	3.0	79	2.9	456	32.344	GFL07-2M □□□100C12	422
	44	1.4	53	1.4	78	1.3	463	32.800	GFL06-2M □□□100C12	422
	40	2.4	48	2.4	70	2.3	514	36.444	GFL07-2M □□□100C12	422
	39	1.2	47	1.2	69	1.1	521	36.951	GFL06-2M □□□100C12	422
	37	2.5	44	2.5	65	2.3	559	39.642	GFL07-2M □□□100C12	422
	35	1.1	43	1.1	63	1.1	576	40.800	GFL06-2M □□□100C12	422
	32	2.0	39	2.0	57	1.9	630	44.667	GFL07-2M □□□100C12	422
	31	0.9	38	0.9	56	0.9	648	45.963	GFL06-2M □□□100C12	422
	28	1.8	34	1.8	49	1.7	734	52.067	GFL07-2M □□□100C12	422
	28	2.8	34	2.8	50	2.6	724	51.333	GFL09-2M □□□100C12	422
	25	1.5	30	1.5	44	1.5	828	58.667	GFL07-2M □□□100C12	422
	25	2.8	30	2.8	44	2.6	816	57.852	GFL09-2M □□□100C12	422
	23	1.4	28	1.4	40	1.3	891	63.190	GFL07-2M □□□100C12	422
	23	1.7	28	1.7	40	1.6	880	63.326	GFL09-3M □□□100C12	430

50 Hz: P_N=2.2 kW
60 Hz: P_N=2.6 kW
87 Hz: P_N=3.9 kW

n_N	1445 r/min		1745 r/min		2555 r/min		M_2 [Nm]	i		
f_N	50 Hz		60 Hz		87 Hz					
P_N	2.2 kW		2.6 kW		3.9 kW					
	n_2 [r/min]	c	n_2 [r/min]	c	n_2 [r/min]	c				
	23	2.3	28	2.3	41	2.2	879	62.300	GFL09-2M □□□100C12	422
	23	2.9	28	2.9	40	2.8	891	63.190	GFL11-2M □□□100C12	422
	22	1.0	27	1.0	39	1.0	907	65.306	GFL07-3M □□□100C12	430
	22	3.2	27	3.2	39	3.2	907	65.306	GFL11-3M □□□100C12	430
	21	2.3	25	2.3	36	2.3	990	70.211	GFL09-2M □□□100C12	422
	20	0.9	24	0.9	35	0.9	1007	72.452	GFL07-3M □□□100C12	430
	20	1.3	25	1.3	36	1.3	1004	71.200	GFL07-2M □□□100C12	422
	20	1.5	24	1.5	35	1.5	1017	73.173	GFL09-3M □□□100C12	430
	20	2.8	24	2.8	35	2.8	1019	73.335	GFL11-3M □□□100C12	430
	20	2.9	25	2.9	36	2.9	1004	71.200	GFL11-2M □□□100C12	422
	18	0.9	21	0.9	31	0.9	1134	81.636	GFL07-3M □□□100C12	430
	18	1.5	21	1.5	31	1.5	1146	82.465	GFL09-3M □□□100C12	430
	18	1.5	22	1.5	32	1.5	1111	78.750	GFL09-2M □□□100C12	422
	18	2.3	22	2.3	32	2.3	1127	79.875	GFL11-2M □□□100C12	422
	18	2.8	21	2.8	31	2.8	1148	82.631	GFL11-3M □□□100C12	430
	16	1.3	19	1.3	27	1.3	1297	93.333	GFL09-3M □□□100C12	430
	16	1.4	20	1.4	29	1.4	1252	88.750	GFL09-2M □□□100C12	422
	16	2.3	19	2.3	28	2.3	1270	90.000	GFL11-2M □□□100C12	422
	15	2.5	19	2.5	27	2.5	1300	93.540	GFL11-3M □□□100C12	430
	14	1.3	17	1.3	24	1.3	1462	105.185	GFL09-3M □□□100C12	430
	14	2.5	17	2.5	24	2.5	1464	105.397	GFL11-3M □□□100C12	430
	13	1.2	15	1.2	22	1.2	1589	114.333	GFL09-3M □□□100C12	430
	13	2.2	15	2.2	22	2.2	1592	114.586	GFL11-3M □□□100C12	430
	11	1.2	14	1.2	20	1.2	1790	128.852	GFL09-3M □□□100C12	430
	11	2.2	14	2.2	20	2.2	1794	129.111	GFL11-3M □□□100C12	430
	9.7	1.0	12	1.0	17	1.0	2068	148.815	GFL09-3M □□□100C12	430
	9.7	1.9	12	1.9	17	1.9	2072	149.144	GFL11-3M □□□100C12	430
	8.6	1.0	10	1.0	15	1.0	2330	167.712	GFL09-3M □□□100C12	430
	8.6	1.9	10	1.9	15	1.9	2335	168.049	GFL11-3M □□□100C12	430
	7.9	1.7	9.6	1.7	14	1.7	2540	182.792	GFL11-3M □□□100C12	430
	7.8	0.9	9.4	0.9	14	0.9	2572	185.111	GFL09-3M □□□100C12	430
	7.2	2.8	8.6	2.8	13	2.8	2808	202.074	GFL14-3M □□□100C12	430
	7	1.7	8.5	1.7	12	1.7	2862	205.963	GFL11-3M □□□100C12	430
	6.9	0.9	8.4	0.9	12	0.9	2899	208.617	GFL09-3M □□□100C12	430
	6.4	1.5	7.8	1.5	11	1.5	3121	224.636	GFL11-3M □□□100C12	430
	6.4	2.8	7.8	2.8	11	2.8	3121	224.636	GFL14-3M □□□100C12	430
	5.7	1.5	6.9	1.5	10	1.5	3517	253.111	GFL11-3M □□□100C12	430
	5.7	2.8	6.9	2.8	10	2.8	3517	253.111	GFL14-3M □□□100C12	430
	5.4	1.4	6.5	1.4	9.6	1.4	3713	267.259	GFL11-3M □□□100C12	430
	5.3	2.6	6.4	2.6	9.3	2.6	3804	273.778	GFL14-3M □□□100C12	430
	4.4	1.2	5.3	1.2	7.8	1.2	4551	327.556	GFL11-3M □□□100C12	430

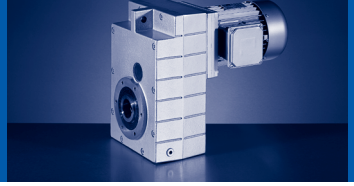

50 Hz: P_N=2.2 kW
60 Hz: P_N=2.6 kW
87 Hz: P_N=3.9 kW

n_N	1445 r/min		1745 r/min		2555 r/min		M_2 [Nm]	i		
f_N	50 Hz		60 Hz		87 Hz					
P_N	2.2 kW		2.6 kW		3.9 kW					
	n_2 [r/min]	c	n_2 [r/min]	c	n_2 [r/min]	c				
	4.4	2.3	5.3	2.3	7.7	2.3	4619	332.444	GFL14-3M □□□100C12	430
	4.1	2.1	5	2.1	7.2	2.1	4902	352.811	GFL14-3M □□□100C12	430
	4	1.1	4.9	1.1	7.1	1.1	4975	358.077	GFL11-3M □□□100C12	430
	3.6	1.1	4.3	1.1	6.3	1.1	5606	403.467	GFL11-3M □□□100C12	430
	3.6	2.1	4.4	2.1	6.4	2.1	5523	397.533	GFL14-3M □□□100C12	430
	3.4	1.0	4.1	1.0	5.9	1.0	5978	430.222	GFL11-3M □□□100C12	430
	3.4	1.8	4.1	1.8	5.9	1.8	5978	430.222	GFL14-3M □□□100C12	430
	2.8	0.8	3.3	0.8	4.9	0.8	7255	522.133	GFL11-3M □□□100C12	430
	2.8	1.5	3.3	1.5	4.9	1.5	7255	522.133	GFL14-3M □□□100C12	430
	2.6	1.2	3.1	1.2	4.5	1.2	7814	562.391	GFL14-3M □□□100C12	430
	2.3	1.1	2.8	1.1	4	1.1	8805	633.680	GFL14-3M □□□100C12	430
	1.8	0.9	2.2	0.9	3.2	0.9	11129	801.000	GFL14-3M □□□100C12	430

50 Hz: P_N=3.0 kW
60 Hz: P_N=3.6 kW
87 Hz: P_N=5.4 kW

n_N	1445 r/min		1745 r/min		2555 r/min		M_2 [Nm]	i		
f_N	50 Hz		60 Hz		87 Hz					
P_N	3.0 kW		3.6 kW		5.4 kW					
	n_2 [r/min]	c	n_2 [r/min]	c	n_2 [r/min]	c				
	434	2.6	524	2.5	767	2.2	64	3.333	GFL05-2M □□□100C32	422
	316	1.9	382	1.8	559	1.6	88	4.571	GFL05-2M □□□100C32	422
	282	2.3	340	2.2	498	1.9	99	5.133	GFL05-2M □□□100C32	422
	255	2.1	308	2.0	451	1.8	109	5.667	GFL05-2M □□□100C32	422
	226	1.4	273	1.3	399	1.2	123	6.400	GFL05-2M □□□100C32	422
	224	2.8	271	2.7	396	2.4	124	6.450	GFL06-2M □□□100C32	422
	205	1.8	248	1.7	363	1.5	135	7.040	GFL05-2M □□□100C32	422
	202	3.2	244	3.0	358	2.6	138	7.147	GFL06-2M □□□100C32	422
	186	1.7	225	1.6	329	1.5	150	7.771	GFL05-2M □□□100C32	422
	160	1.5	194	1.5	284	1.3	173	9.010	GFL05-2M □□□100C32	422
	153	3.2	184	3.0	270	2.7	182	9.463	GFL06-2M □□□100C32	422
	145	1.4	176	1.4	257	1.2	191	9.946	GFL05-2M □□□100C32	422
	143	2.4	173	2.3	253	2.0	194	10.092	GFL06-2M □□□100C32	422
	127	1.3	154	1.2	225	1.1	219	11.360	GFL05-2M □□□100C32	422
	125	2.9	152	2.7	222	2.4	222	11.520	GFL06-2M □□□100C32	422
	113	1.2	136	1.1	200	1.0	246	12.800	GFL05-2M □□□100C32	422
	111	2.4	135	2.3	197	2.0	250	12.978	GFL06-2M □□□100C32	422
	99	1.1	120	1.0	176	0.9	280	14.538	GFL05-2M □□□100C32	422
	98	2.3	118	2.2	173	1.9	284	14.743	GFL06-2M □□□100C32	422
	91	1.0	110	1.0	161	0.9	306	15.904	GFL05-2M □□□100C32	422
	90	2.1	108	2.0	158	1.7	310	16.128	GFL06-2M □□□100C32	422
	81	0.9	97	0.9			345	17.920	GFL05-2M □□□100C32	422
	80	1.7	96	1.6	141	1.4	350	18.169	GFL06-2M □□□100C32	422
	71	0.9	86	0.8			390	20.286	GFL05-2M □□□100C32	422
	71	3.2	86	3.1	126	2.7	390	20.286	GFL07-2M □□□100C32	422
	70	1.6	85	1.6	124	1.4	396	20.571	GFL06-2M □□□100C32	422
	63	2.8	76	2.7	112	2.4	440	22.857	GFL07-2M □□□100C32	422
	62	1.4	75	1.3	110	1.1	446	23.175	GFL06-2M □□□100C32	422
	58	2.8	70	2.8	103	2.7	478	24.850	GFL07-2M □□□100C32	422
	57	1.3	69	1.3	101	1.3	485	25.200	GFL06-2M □□□100C32	422
	52	2.3	62	2.3	91	2.2	539	28.000	GFL07-2M □□□100C32	422
	51	1.1	62	1.1	90	1.1	546	28.389	GFL06-2M □□□100C32	422
	45	2.2	54	2.2	79	2.1	622	32.344	GFL07-2M □□□100C32	422
	44	1.0	53	1.0	78	1.0	631	32.800	GFL06-2M □□□100C32	422
	44	3.0	53	3.0	78	2.8	628	32.667	GFL09-2M □□□100C32	422
	40	1.8	48	1.8	70	1.7	701	36.444	GFL07-2M □□□100C32	422
	39	0.9	47	0.9	69	0.8	711	36.951	GFL06-2M □□□100C32	422
	39	3.0	47	3.0	69	2.8	708	36.815	GFL09-2M □□□100C32	422
	37	1.8	44	1.8	65	1.7	763	39.642	GFL07-2M □□□100C32	422
	36	2.5	44	2.5	64	2.4	763	39.667	GFL09-2M □□□100C32	422
	35	0.8	43	0.8			785	40.800	GFL06-2M □□□100C32	422

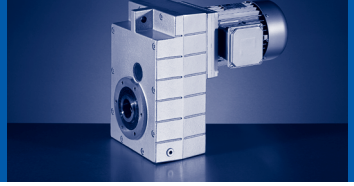

50 Hz: P_N=3.0 kW
60 Hz: P_N=3.6 kW
87 Hz: P_N=5.4 kW

n_N	1445 r/min		1745 r/min		2555 r/min		M_2 [Nm]	i		
f_N	50 Hz		60 Hz		87 Hz					
P_N	3.0 kW		3.6 kW		5.4 kW					
	n_2 [r/min]	c	n_2 [r/min]	c	n_2 [r/min]	c				
	32	1.5	39	1.5	57	1.4	859	44.667	GFL07-2M □□□100C32	422
	32	2.5	39	2.5	57	2.4	860	44.704	GFL09-2M □□□100C32	422
	28	1.3	34	1.3	49	1.3	1002	52.067	GFL07-2M □□□100C32	422
	28	2.0	34	2.0	50	1.9	987	51.333	GFL09-2M □□□100C32	422
	28	2.5	34	2.5	49	2.4	1002	52.067	GFL11-2M □□□100C32	422
	25	1.1	30	1.1	44	1.1	1129	58.667	GFL07-2M □□□100C32	422
	25	2.0	30	2.0	44	1.9	1113	57.852	GFL09-2M □□□100C32	422
	25	2.5	30	2.5	44	2.4	1129	58.667	GFL11-2M □□□100C32	422
	23	1.0	28	1.0	40	1.0	1216	63.190	GFL07-2M □□□100C32	422
	23	1.3	28	1.3	40	1.2	1200	63.326	GFL09-3M □□□100C32	430
	23	1.7	28	1.7	41	1.6	1198	62.300	GFL09-2M □□□100C32	422
	23	2.1	28	2.1	40	2.0	1216	63.190	GFL11-2M □□□100C32	422
	22	2.3	27	2.3	39	2.3	1237	65.306	GFL11-3M □□□100C32	430
	21	1.7	25	1.7	36	1.7	1351	70.211	GFL09-2M □□□100C32	422
	20	0.9	25	0.9	36	0.9	1370	71.200	GFL07-2M □□□100C32	422
	20	1.1	24	1.1	35	1.1	1386	73.173	GFL09-3M □□□100C32	430
	20	2.1	24	2.1	35	2.1	1390	73.335	GFL11-3M □□□100C32	430
	20	2.1	25	2.1	36	2.1	1370	71.200	GFL11-2M □□□100C32	422
	18	1.1	22	1.1	32	1.1	1515	78.750	GFL09-2M □□□100C32	422
	18	1.1	21	1.1	31	1.1	1562	82.465	GFL09-3M □□□100C32	430
	18	1.7	22	1.7	32	1.7	1536	79.875	GFL11-2M □□□100C32	422
	18	2.1	21	2.1	31	2.1	1566	82.631	GFL11-3M □□□100C32	430
	16	1.0	20	1.0	29	1.0	1707	88.750	GFL09-2M □□□100C32	422
	16	1.0	19	1.0	27	1.0	1768	93.333	GFL09-3M □□□100C32	430
	16	1.7	19	1.7	28	1.7	1731	90.000	GFL11-2M □□□100C32	422
	15	1.8	19	1.8	27	1.8	1772	93.540	GFL11-3M □□□100C32	430
	14	1.0	17	1.0	24	1.0	1993	105.185	GFL09-3M □□□100C32	430
	14	1.8	17	1.8	24	1.8	1997	105.397	GFL11-3M □□□100C32	430
	14	3.0	17	3.0	24	3.0	1987	104.889	GFL14-3M □□□100C32	430
	13	0.9	15	0.9	22	0.9	2166	114.333	GFL09-3M □□□100C32	430
	13	1.6	15	1.6	22	1.6	2171	114.586	GFL11-3M □□□100C32	430
	13	3.0	15	3.0	22	3.0	2162	114.126	GFL14-3M □□□100C32	430
	11	0.9	14	0.9	20	0.9	2441	128.852	GFL09-3M □□□100C32	430
	11	1.6	14	1.6	20	1.6	2446	129.111	GFL11-3M □□□100C32	430
	11	3.0	14	3.0	20	3.0	2436	128.593	GFL14-3M □□□100C32	430
	9.7	1.4	12	1.4	17	1.4	2826	149.144	GFL11-3M □□□100C32	430
	9.3	2.5	11	2.5	16	2.5	2959	156.148	GFL14-3M □□□100C32	430
	8.6	1.4	10	1.4	15	1.4	3184	168.049	GFL11-3M □□□100C32	430
	8.5	2.6	10	2.6	15	2.6	3222	170.074	GFL14-3M □□□100C32	430
	7.9	1.2	9.6	1.2	14	1.2	3463	182.792	GFL11-3M □□□100C32	430
	7.2	2.0	8.6	2.0	13	2.0	3829	202.074	GFL14-3M □□□100C32	430

50 Hz: P_N=3.0 kW
60 Hz: P_N=3.6 kW
87 Hz: P_N=5.4 kW

n_N	1445 r/min		1745 r/min		2555 r/min		M_2 [Nm]	i		
f_N	50 Hz		60 Hz		87 Hz					
P_N	3.0 kW		3.6 kW		5.4 kW					
	n_2 [r/min]	c	n_2 [r/min]	c	n_2 [r/min]	c				
	7	1.2	8.5	1.2	12	1.2	3902	205.963	GFL11-3M □□□100C32	430
	6.4	1.1	7.8	1.1	11	1.1	4256	224.636	GFL11-3M □□□100C32	430
	6.4	2.1	7.8	2.1	11	2.1	4256	224.636	GFL14-3M □□□100C32	430
	5.7	1.1	6.9	1.1	10	1.1	4796	253.111	GFL11-3M □□□100C32	430
	5.7	2.1	6.9	2.1	10	2.1	4796	253.111	GFL14-3M □□□100C32	430
	5.4	1.0	6.5	1.0	9.6	1.0	5064	267.259	GFL11-3M □□□100C32	430
	5.3	1.9	6.4	1.9	9.3	1.9	5187	273.778	GFL14-3M □□□100C32	430
	4.4	0.9	5.3	0.9	7.8	0.9	6206	327.556	GFL11-3M □□□100C32	430
	4.4	1.7	5.3	1.7	7.7	1.7	6299	332.444	GFL14-3M □□□100C32	430
	4.1	1.6	5	1.6	7.2	1.6	6685	352.811	GFL14-3M □□□100C32	430
	3.6	1.5	4.4	1.5	6.4	1.5	7532	397.533	GFL14-3M □□□100C32	430
	3.4	1.3	4.1	1.3	5.9	1.3	8151	430.222	GFL14-3M □□□100C32	430
	2.8	1.1	3.3	1.1	4.9	1.1	9893	522.133	GFL14-3M □□□100C32	430
	2.6	0.9	3.1	0.9	4.5	0.9	10656	562.391	GFL14-3M □□□100C32	430
	2.3	0.8	2.8	0.8	4	0.8	12006	633.680	GFL14-3M □□□100C32	430

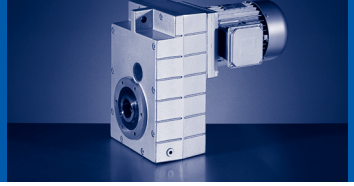

50 Hz: P_N=4.0 kW
60 Hz: P_N=4.8 kW
87 Hz: P_N=7.1 kW

n_N	1455 r/min		1755 r/min		2565 r/min		M_2 [Nm]	i		
f_N	50 Hz		60 Hz		87 Hz					
P_N	4.0 kW		4.8 kW		7.1 kW					
	n_2 [r/min]	c	n_2 [r/min]	c	n_2 [r/min]	c				
	396	3.4	478	3.3	698	2.9	94	3.675	GFL06-2M □□□112C22	422
	313	4.2	378	4.0	553	3.5	118	4.643	GFL07-2M □□□112C22	422
	279	3.2	337	3.0	492	2.7	133	5.211	GFL06-2M □□□112C22	422
	253	3.0	305	2.9	446	2.5	147	5.750	GFL06-2M □□□112C22	422
	226	2.1	272	2.0	398	1.8	164	6.450	GFL06-2M □□□112C22	422
	204	2.4	246	2.3	359	2.0	182	7.147	GFL06-2M □□□112C22	422
	173	2.8	209	2.7	305	2.4	214	8.400	GFL06-2M □□□112C22	422
	154	2.4	186	2.3	271	2.0	241	9.463	GFL06-2M □□□112C22	422
	144	1.8	174	1.7	254	1.5	257	10.092	GFL06-2M □□□112C22	422
	126	2.2	152	2.0	223	1.8	293	11.520	GFL06-2M □□□112C22	422
	112	1.8	135	1.7	198	1.5	331	12.978	GFL06-2M □□□112C22	422
	103	3.2	124	3.0	181	2.6	362	14.200	GFL07-2M □□□112C22	422
	99	1.7	119	1.6	174	1.4	376	14.743	GFL06-2M □□□112C22	422
	92	2.9	110	2.8	161	2.4	405	15.904	GFL07-2M □□□112C22	422
	90	1.6	109	1.5	159	1.3	411	16.128	GFL06-2M □□□112C22	422
	81	2.6	98	2.5	143	2.2	456	17.920	GFL07-2M □□□112C22	422
	80	1.3	97	1.2	141	1.1	463	18.169	GFL06-2M □□□112C22	422
	72	2.4	87	2.3	126	2.0	517	20.286	GFL07-2M □□□112C22	422
	71	1.2	85	1.2	125	1.0	524	20.571	GFL06-2M □□□112C22	422
	64	2.1	77	2.0	112	1.8	582	22.857	GFL07-2M □□□112C22	422
	63	1.0	76	1.0	111	0.9	590	23.175	GFL06-2M □□□112C22	422
	59	2.1	71	2.1	103	2.0	633	24.850	GFL07-2M □□□112C22	422
	58	1.0	70	1.0	102	1.0	642	25.200	GFL06-2M □□□112C22	422
	52	1.7	63	1.7	92	1.7	713	28.000	GFL07-2M □□□112C22	422
	51	0.8	62	0.8			723	28.389	GFL06-2M □□□112C22	422
	45	1.7	54	1.7	79	1.6	824	32.344	GFL07-2M □□□112C22	422
	45	2.6	54	2.6	79	2.4	832	32.667	GFL09-2M □□□112C22	422
	40	1.3	48	1.3	70	1.3	928	36.444	GFL07-2M □□□112C22	422
	40	2.6	48	2.6	70	2.4	938	36.815	GFL09-2M □□□112C22	422
	37	1.4	44	1.4	65	1.3	1010	39.642	GFL07-2M □□□112C22	422
	37	2.2	44	2.2	65	2.1	1010	39.667	GFL09-2M □□□112C22	422
	36	2.7	44	2.7	64	2.6	1025	40.233	GFL11-2M □□□112C22	422
	33	1.1	39	1.1	57	1.1	1138	44.667	GFL07-2M □□□112C22	422
	33	2.2	39	2.2	57	2.1	1139	44.704	GFL09-2M □□□112C22	422
	32	2.7	39	2.7	57	2.6	1155	45.333	GFL11-2M □□□112C22	422
	28	1.8	34	1.8	50	1.7	1308	51.333	GFL09-2M □□□112C22	422
	28	2.2	34	2.2	49	2.1	1326	52.067	GFL11-2M □□□112C22	422
	28	2.7	34	2.7	49	2.6	1326	52.067	GFL14-2M □□□112C22	422
	25	1.8	30	1.8	44	1.7	1474	57.852	GFL09-2M □□□112C22	422
	25	2.2	30	2.2	44	2.1	1494	58.667	GFL11-2M □□□112C22	422
	25	2.7	30	2.7	44	2.6	1494	58.667	GFL14-2M □□□112C22	422

50 Hz: P_N=4.0 kW
60 Hz: P_N=4.8 kW
87 Hz: P_N=7.1 kW

n_N	1455 r/min		1755 r/min		2565 r/min		M_2 [Nm]	i		
f_N	50 Hz		60 Hz		87 Hz					
P_N	4.0 kW		4.8 kW		7.1 kW					
	n_2 [r/min]	c	n_2 [r/min]	c	n_2 [r/min]	c				
	23	1.0	28	1.0	41	0.9	1589	63.326	GFL09-3M □□□112C22	430
	23	1.5	28	1.5	41	1.4	1587	62.300	GFL09-2M □□□112C22	422
	23	1.8	28	1.8	41	1.7	1610	63.190	GFL11-2M □□□112C22	422
	23	2.3	28	2.3	41	2.2	1610	63.190	GFL14-2M □□□112C22	422
	22	1.8	27	1.8	39	1.8	1638	65.306	GFL11-3M □□□112C22	430
	21	1.4	25	1.4	37	1.4	1788	70.211	GFL09-2M □□□112C22	422
	21	3.1	26	3.1	37	3.1	1724	68.708	GFL14-3M □□□112C22	430
	20	0.8	24	0.8	35	0.8	1836	73.173	GFL09-3M □□□112C22	430
	20	1.6	24	1.6	35	1.6	1840	73.335	GFL11-3M □□□112C22	430
	20	1.8	25	1.8	36	1.8	1814	71.200	GFL11-2M □□□112C22	422
	20	2.3	25	2.3	36	2.3	1814	71.200	GFL14-2M □□□112C22	422
	19	3.1	23	3.1	33	3.1	1942	77.418	GFL14-3M □□□112C22	430
	18	0.8	21	0.8	31	0.8	2069	82.465	GFL09-3M □□□112C22	430
	18	1.5	22	1.5	32	1.5	2035	79.875	GFL11-2M □□□112C22	422
	18	1.6	21	1.6	31	1.6	2073	82.631	GFL11-3M □□□112C22	430
	18	1.8	22	1.8	32	1.8	2035	79.875	GFL14-2M □□□112C22	422
	17	2.9	21	2.9	30	2.9	2134	85.037	GFL14-3M □□□112C22	430
	16	1.4	19	1.4	27	1.4	2347	93.540	GFL11-3M □□□112C22	430
	16	1.5	20	1.5	29	1.5	2292	90.000	GFL11-2M □□□112C22	422
	16	1.8	20	1.8	29	1.8	2292	90.000	GFL14-2M □□□112C22	422
	14	1.4	17	1.4	24	1.4	2644	105.397	GFL11-3M □□□112C22	430
	14	2.6	17	2.6	25	2.6	2632	104.889	GFL14-3M □□□112C22	430
	13	1.2	15	1.2	22	1.2	2875	114.586	GFL11-3M □□□112C22	430
	13	2.4	15	2.4	23	2.4	2863	114.126	GFL14-3M □□□112C22	430
	11	1.2	14	1.2	20	1.2	3239	129.111	GFL11-3M □□□112C22	430
	11	2.1	13	2.1	19	2.1	3434	136.889	GFL14-3M □□□112C22	430
	11	2.4	14	2.4	20	2.4	3226	128.593	GFL14-3M □□□112C22	430
	9.8	1.0	12	1.0	17	1.0	3742	149.144	GFL11-3M □□□112C22	430
	9.3	2.1	11	2.1	16	2.1	3918	156.148	GFL14-3M □□□112C22	430
	8.7	1.0	10	1.0	15	1.0	4216	168.049	GFL11-3M □□□112C22	430
	8.6	2.0	10	2.0	15	2.0	4267	170.074	GFL14-3M □□□112C22	430
	8	0.9	9.6	0.9	14	0.9	4586	182.792	GFL11-3M □□□112C22	430
	7.2	1.8	8.7	1.8	13	1.8	5070	202.074	GFL14-3M □□□112C22	430
	7.1	0.9	8.5	0.9	13	0.9	5167	205.963	GFL11-3M □□□112C22	430
	6.5	0.8	7.8	0.8	11	0.8	5636	224.636	GFL11-3M □□□112C22	430
	6.5	1.6	7.8	1.6	11	1.6	5636	224.636	GFL14-3M □□□112C22	430
	5.8	0.8	6.9	0.8	10	0.8	6350	253.111	GFL11-3M □□□112C22	430
	5.8	1.6	6.9	1.6	10	1.6	6350	253.111	GFL14-3M □□□112C22	430
	5.3	1.4	6.4	1.4	9.4	1.4	6869	273.778	GFL14-3M □□□112C22	430
	4.4	1.3	5.3	1.3	7.7	1.3	8341	332.444	GFL14-3M □□□112C22	430
	4.1	1.2	5	1.2	7.3	1.2	8852	352.811	GFL14-3M □□□112C22	430

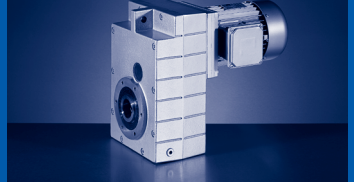

50 Hz: P_N=4.0 kW
60 Hz: P_N=4.8 kW
87 Hz: P_N=7.1 kW

n_N	1455 r/min		1755 r/min		2565 r/min		M_2 [Nm]	i		
f_N	50 Hz		60 Hz		87 Hz					
P_N	4.0 kW		4.8 kW		7.1 kW					
	n_2 [r/min]	c	n_2 [r/min]	c	n_2 [r/min]	c				
	3.7	1.2	4.4	1.2	6.5	1.2	9974	397.533	GFL14-3M □□□112C22	430
	3.4	1.0	4.1	1.0	6	1.0	10794	430.222	GFL14-3M □□□112C22	430
	2.8	0.8	3.4	0.8	4.9	0.8	13100	522.133	GFL14-3M □□□112C22	430

50 Hz: P_N=5.5 kW
60 Hz: P_N=6.6 kW
87 Hz: P_N=9.7 kW

n_N	1470 r/min		1770 r/min		2580 r/min		M_2 [Nm]	i		
f_N	50 Hz		60 Hz		87 Hz					
P_N	5.5 kW		6.6 kW		9.7 kW					
	n_2 [r/min]	c	n_2 [r/min]	c	n_2 [r/min]	c				
	439	5.5	528	5.2	770	4.6	116	3.350	GFL07-2M □□□132C12	422
	400	2.7	482	2.5	702	2.2	127	3.675	GFL06-2M□□□132C12	422
	317	4.1	381	3.8	556	3.4	161	4.643	GFL07-2M □□□132C12	422
	285	4.8	343	4.5	500	4.0	179	5.159	GFL07-2M □□□132C12	422
	282	2.3	340	2.2	495	2.0	181	5.211	GFL06-2M□□□132C12	422
	258	4.6	311	4.4	453	3.9	197	5.695	GFL07-2M □□□132C12	422
	256	2.2	308	2.1	449	1.9	199	5.750	GFL06-2M□□□132C12	422
	230	3.0	277	2.8	403	2.5	222	6.400	GFL07-2M □□□132C12	422
	228	1.6	274	1.5	400	1.3	224	6.450	GFL06-2M□□□132C12	422
	206	1.8	248	1.7	361	1.5	248	7.147	GFL06-2M□□□132C12	422
	206	3.7	248	3.5	361	3.1	248	7.150	GFL07-2M □□□132C12	422
	177	3.4	213	3.3	310	2.9	289	8.324	GFL07-2M □□□132C12	422
	175	2.1	211	2.0	307	1.7	291	8.400	GFL06-2M□□□132C12	422
	157	3.1	189	2.9	275	2.6	325	9.379	GFL07-2M □□□132C12	422
	155	1.8	187	1.7	273	1.5	328	9.463	GFL06-2M□□□132C12	422
	151	2.9	182	2.7	266	2.4	337	9.714	GFL07-2M □□□132C12	422
	146	1.3	175	1.2	256	1.1	350	10.092	GFL06-2M□□□132C12	422
	128	1.6	154	1.5	224	1.3	399	11.520	GFL06-2M□□□132C12	422
	127	2.7	153	2.6	224	2.3	400	11.538	GFL07-2M □□□132C12	422
	113	1.3	136	1.2	199	1.1	450	12.978	GFL06-2M□□□132C12	422
	113	2.4	136	2.3	199	2.0	451	13.000	GFL07-2M □□□132C12	422
	104	2.3	125	2.2	182	1.9	492	14.200	GFL07-2M □□□132C12	422
	100	1.3	120	1.2	175	1.1	511	14.743	GFL06-2M□□□132C12	422
	92	2.1	111	2.0	162	1.8	551	15.904	GFL07-2M □□□132C12	422
	91	1.2	110	1.1	160	1.0	559	16.128	GFL06-2M□□□132C12	422
	82	1.9	99	1.8	144	1.6	621	17.920	GFL07-2M □□□132C12	422
	81	1.0	97	0.9			630	18.169	GFL06-2M□□□132C12	422
	73	1.8	87	1.7	127	1.5	703	20.286	GFL07-2M □□□132C12	422
	72	0.9	86	0.9			713	20.571	GFL06-2M□□□132C12	422
	64	1.6	77	1.5	113	1.3	792	22.857	GFL07-2M □□□132C12	422
	59	1.6	71	1.6	104	1.5	861	24.850	GFL07-2M □□□132C12	422
	54	2.9	65	2.9	95	2.8	942	27.173	GFL09-2M □□□132C12	422
	53	1.3	63	1.3	92	1.2	971	28.000	GFL07-2M □□□132C12	422
	45	2.6	54	2.6	79	2.5	1132	32.667	GFL09-2M □□□132C12	422
	40	2.4	48	2.4	70	2.2	1276	36.815	GFL09-2M □□□132C12	422
	37	2.3	45	2.3	65	2.1	1375	39.667	GFL09-2M □□□132C12	422
	33	2.0	40	2.0	58	1.9	1550	44.704	GFL09-2M □□□132C12	422
	32	3.1	39	3.1	57	3.0	1572	45.333	GFL11-2M □□□132C12	422
	28	2.9	34	2.9	50	2.8	1805	52.067	GFL11-2M □□□132C12	422
	25	2.6	30	2.6	44	2.5	2034	58.667	GFL11-2M □□□132C12	422
	23	1.3	27	1.3	40	1.3	2230	65.306	GFL11-3M □□□132C12	430

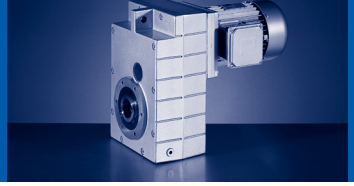

50 Hz: P_N=5.5 kW
60 Hz: P_N=6.6 kW
87 Hz: P_N=9.7 kW

n_N	1470 r/min		1770 r/min		2580 r/min		M_2 [Nm]	i		
f_N	50 Hz		60 Hz		87 Hz					
P_N	5.5 kW		6.6 kW		9.7 kW					
	n_2 [r/min]	c	n_2 [r/min]	c	n_2 [r/min]	c				
	23	2.5	28	2.5	41	2.4	2191	63.190	GFL11-2M □□□132C12	422
	23	2.6	28	2.6	40	2.4	2195	64.296	GFL14-3M □□□132C12	430
	21	2.3	26	2.3	38	2.3	2346	68.708	GFL14-3M □□□132C12	430
	21	2.3	25	2.3	36	2.3	2468	71.200	GFL11-2M □□□132C12	422
	20	1.2	24	1.2	35	1.2	2504	73.335	GFL11-3M □□□132C12	430
	19	2.3	23	2.3	33	2.3	2643	77.418	GFL14-3M □□□132C12	430
	18	1.2	21	1.2	31	1.2	2821	82.631	GFL11-3M □□□132C12	430
	18	2.5	22	2.5	32	2.5	2769	79.875	GFL14-2M □□□132C12	422
	17	2.2	21	2.2	30	2.2	2904	85.037	GFL14-3M □□□132C12	430
	16	1.0	19	1.0	28	1.0	3194	93.540	GFL11-3M □□□132C12	430
	16	2.5	20	2.5	29	2.5	3120	90.000	GFL14-2M □□□132C12	422
	14	1.0	17	1.0	25	1.0	3599	105.397	GFL11-3M □□□132C12	430
	14	1.9	17	1.9	25	1.9	3581	104.889	GFL14-3M □□□132C12	430
	13	0.9	15	0.9	23	0.9	3913	114.586	GFL11-3M □□□132C12	430
	13	1.7	16	1.7	23	1.7	3897	114.126	GFL14-3M □□□132C12	430
	11	0.9	14	0.9	20	0.9	4409	129.111	GFL11-3M □□□132C12	430
	11	1.6	13	1.6	19	1.6	4674	136.889	GFL14-3M □□□132C12	430
	11	1.7	14	1.7	20	1.7	4391	128.593	GFL14-3M □□□132C12	430
	9.4	1.5	11	1.5	17	1.5	5332	156.148	GFL14-3M □□□132C12	430
	8.6	1.5	10	1.5	15	1.5	5807	170.074	GFL14-3M □□□132C12	430
	6.5	1.1	7.9	1.1	12	1.1	7670	224.636	GFL14-3M □□□132C12	430
	5.8	1.1	7	1.1	10	1.1	8642	253.111	GFL14-3M □□□132C12	430
	5.4	1.0	6.5	1.0	9.4	1.0	9348	273.778	GFL14-3M □□□132C12	430
	4.4	0.9	5.3	0.9	7.8	0.9	11351	332.444	GFL14-3M □□□132C12	430

50 Hz: P_N=7.5 kW
60 Hz: P_N=9.0 kW
87 Hz: P_N=13.2 kW

n_N	1460 r/min		1760 r/min		2570 r/min		M_2 [Nm]	i		
f_N	50 Hz		60 Hz		87 Hz					
P_N	7.5 kW		9.0 kW		13.2 kW					
	n_2 [r/min]	c	n_2 [r/min]	c	n_2 [r/min]	c				
	436	4.0	525	3.8	767	3.4	159	3.350	GFL07-2M □□□132C22	422
	397	1.9	479	1.8	699	1.6	175	3.675	GFL06-2M□□□132C22	422
	315	3.0	379	2.8	554	2.5	221	4.643	GFL07-2M □□□132C22	422
	283	3.5	341	3.3	498	2.9	246	5.159	GFL07-2M □□□132C22	422
	280	1.7	338	1.6	493	1.4	248	5.211	GFL06-2M□□□132C22	422
	256	3.4	309	3.2	451	2.8	271	5.695	GFL07-2M □□□132C22	422
	254	1.6	306	1.5	447	1.4	274	5.750	GFL06-2M□□□132C22	422
	228	2.2	275	2.1	402	1.8	305	6.400	GFL07-2M □□□132C22	422
	226	1.2	273	1.1	398	1.0	307	6.450	GFL06-2M□□□132C22	422
	204	1.3	246	1.2	360	1.1	340	7.147	GFL06-2M□□□132C22	422
	204	2.7	246	2.6	359	2.3	340	7.150	GFL07-2M □□□132C22	422
	175	2.5	211	2.4	309	2.1	396	8.324	GFL07-2M □□□132C22	422
	174	1.5	210	1.4	306	1.3	400	8.400	GFL06-2M□□□132C22	422
	156	2.2	188	2.1	274	1.9	446	9.379	GFL07-2M □□□132C22	422
	154	1.3	186	1.2	272	1.1	450	9.463	GFL06-2M□□□132C22	422
	150	2.1	181	2.0	265	1.8	462	9.714	GFL07-2M □□□132C22	422
	145	1.0	174	0.9			480	10.092	GFL06-2M□□□132C22	422
	127	1.2	153	1.1	223	1.0	548	11.520	GFL06-2M□□□132C22	422
	127	2.0	153	1.9	223	1.6	549	11.538	GFL07-2M □□□132C22	422
	113	1.0	136	0.9	198	0.8	618	12.978	GFL06-2M□□□132C22	422
	112	1.8	135	1.7	198	1.5	619	13.000	GFL07-2M □□□132C22	422
	103	1.7	124	1.6	181	1.4	676	14.200	GFL07-2M □□□132C22	422
	99	0.9	119	0.9			702	14.743	GFL06-2M□□□132C22	422
	92	1.6	111	1.5	162	1.3	757	15.904	GFL07-2M □□□132C22	422
	91	0.8					768	16.128	GFL06-2M□□□132C22	422
	89	3.2	108	3.0	157	2.7	777	16.333	GFL09-2M □□□132C22	422
	82	1.4	98	1.3	143	1.2	853	17.920	GFL07-2M □□□132C22	422
	79	2.8	96	2.7	140	2.4	876	18.407	GFL09-2M □□□132C22	422
	74	2.7	90	2.6	131	2.3	936	19.667	GFL09-2M □□□132C22	422
	72	1.3	87	1.2	127	1.1	966	20.286	GFL07-2M □□□132C22	422
	66	2.5	79	2.4	116	2.1	1055	22.164	GFL09-2M □□□132C22	422
	64	1.1	77	1.1	112	1.0	1088	22.857	GFL07-2M □□□132C22	422
	61	2.4	73	2.4	107	2.3	1148	24.111	GFL09-2M □□□132C22	422
	59	1.1	71	1.1	103	1.1	1183	24.850	GFL07-2M □□□132C22	422
	54	2.1	65	2.1	95	2.0	1293	27.173	GFL09-2M □□□132C22	422
	52	0.9	63	0.9	92	0.9	1333	28.000	GFL07-2M □□□132C22	422
	52	3.2	63	3.2	92	3.0	1333	28.000	GFL11-2M □□□132C22	422
	45	1.9	54	1.9	79	1.8	1555	32.667	GFL09-2M □□□132C22	422
	45	3.0	54	3.0	79	2.8	1558	32.739	GFL11-2M □□□132C22	422
	40	1.7	48	1.7	70	1.6	1752	36.815	GFL09-2M □□□132C22	422
	40	2.6	48	2.6	70	2.5	1756	36.889	GFL11-2M □□□132C22	422

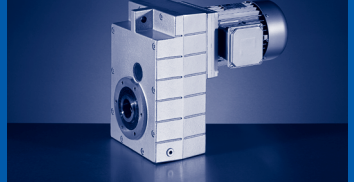

50 Hz: P_N=7.5 kW
60 Hz: P_N=9.0 kW
87 Hz: P_N=13.2 kW

n_N	1460 r/min		1760 r/min		2570 r/min		M_2 [Nm]	i		
f_N	50 Hz		60 Hz		87 Hz					
P_N	7.5 kW		9.0 kW		13.2 kW					
	n_2 [r/min]	c	n_2 [r/min]	c	n_2 [r/min]	c				
	37	1.7	44	1.7	65	1.6	1888	39.667	GFL09-2M □□□132C22	422
	36	2.6	44	2.6	64	2.4	1915	40.233	GFL11-2M □□□132C22	422
	33	1.4	39	1.4	58	1.4	2128	44.704	GFL09-2M □□□132C22	422
	32	2.3	39	2.3	57	2.2	2158	45.333	GFL11-2M □□□132C22	422
	28	2.1	34	2.1	49	2.0	2478	52.067	GFL11-2M □□□132C22	422
	28	3.1	34	3.1	49	2.9	2478	52.067	GFL14-2M □□□132C22	422
	25	1.9	30	1.9	44	1.8	2792	58.667	GFL11-2M □□□132C22	422
	25	3.1	30	3.1	44	2.9	2792	58.667	GFL14-2M □□□132C22	422
	23	1.9	28	1.9	41	1.8	3008	63.190	GFL11-2M □□□132C22	422
	23	1.9	27	1.9	40	1.8	3014	64.296	GFL14-3M □□□132C22	430
	23	2.6	28	2.6	41	2.5	3008	63.190	GFL14-2M □□□132C22	422
	22	0.9	27	0.9	39	0.9	3062	65.306	GFL11-3M □□□132C22	430
	21	1.6	25	1.6	36	1.6	3389	71.200	GFL11-2M □□□132C22	422
	21	1.7	26	1.7	37	1.7	3221	68.708	GFL14-3M □□□132C22	430
	21	2.6	25	2.6	36	2.6	3389	71.200	GFL14-2M □□□132C22	422
	20	0.8	24	0.8	35	0.8	3438	73.335	GFL11-3M □□□132C22	430
	19	1.7	23	1.7	33	1.7	3629	77.418	GFL14-3M □□□132C22	430
	18	0.8	21	0.8	31	0.8	3874	82.631	GFL11-3M □□□132C22	430
	18	1.9	22	1.9	32	1.9	3802	79.875	GFL14-2M □□□132C22	422
	17	1.6	21	1.6	30	1.6	3987	85.037	GFL14-3M □□□132C22	430
	16	1.9	20	1.9	29	1.9	4284	90.000	GFL14-2M □□□132C22	422
	14	1.4	17	1.4	25	1.4	4917	104.889	GFL14-3M □□□132C22	430
	13	1.3	15	1.3	23	1.3	5350	114.126	GFL14-3M □□□132C22	430
	11	1.2	13	1.2	19	1.2	6417	136.889	GFL14-3M □□□132C22	430
	11	1.3	14	1.3	20	1.3	6028	128.593	GFL14-3M □□□132C22	430
	9.4	1.1	11	1.1	17	1.1	7320	156.148	GFL14-3M □□□132C22	430
	8.6	1.1	10	1.1	15	1.1	7973	170.074	GFL14-3M □□□132C22	430
	6.5	0.8	7.8	0.8	11	0.8	10531	224.636	GFL14-3M □□□132C22	430
	5.8	0.8	7	0.8	10	0.8	11866	253.111	GFL14-3M □□□132C22	430

50 Hz: P_N=11.0 kW
60 Hz: P_N=13.2 kW
87 Hz: P_N=19.4 kW

n_N	1470 r/min		1770 r/min		2580 r/min		M_2 [Nm]	i		
f_N	50 Hz		60 Hz		87 Hz					
P_N	11.0 kW		13.2 kW		19.4 kW					
	n_2 [r/min]	c	n_2 [r/min]	c	n_2 [r/min]	c				
	439	2.8	528	2.6	770	2.3	232	3.350	GFL07-2M □□□160C22	422
	317	2.0	381	1.9	556	1.7	322	4.643	GFL07-2M □□□160C22	422
	285	2.4	343	2.3	500	2.0	358	5.159	GFL07-2M □□□160C22	422
	258	2.3	311	2.2	453	1.9	395	5.695	GFL07-2M □□□160C22	422
	230	1.5	277	1.4	403	1.3	444	6.400	GFL07-2M □□□160C22	422
	206	1.9	248	1.8	361	1.6	496	7.150	GFL07-2M □□□160C22	422
	177	1.7	213	1.6	310	1.4	577	8.324	GFL07-2M □□□160C22	422
	157	1.5	189	1.5	275	1.3	650	9.379	GFL07-2M □□□160C22	422
	151	1.4	182	1.4	266	1.2	674	9.714	GFL07-2M □□□160C22	422
	132	3.0	159	2.8	231	2.5	774	11.167	GFL09-2M □□□160C22	422
	127	1.4	153	1.3	224	1.1	800	11.538	GFL07-2M □□□160C22	422
	119	2.6	144	2.5	210	2.2	853	12.307	GFL09-2M □□□160C22	422
	113	1.2	136	1.1	199	1.0	901	13.000	GFL07-2M □□□160C22	422
	104	1.2	125	1.1	182	1.0	985	14.200	GFL07-2M □□□160C22	422
	103	2.4	124	2.3	180	2.0	994	14.333	GFL09-2M □□□160C22	422
	92	1.1	111	1.0	162	0.9	1103	15.904	GFL07-2M □□□160C22	422
	90	2.2	108	2.1	158	1.8	1132	16.333	GFL09-2M □□□160C22	422
	82	1.0	99	0.9			1242	17.920	GFL07-2M □□□160C22	422
	82	3.1	99	2.9	144	2.6	1242	17.920	GFL11-2M □□□160C22	422
	80	1.9	96	1.8	140	1.6	1276	18.407	GFL09-2M □□□160C22	422
	75	1.9	90	1.8	131	1.6	1364	19.667	GFL09-2M □□□160C22	422
	73	2.9	87	2.7	127	2.4	1406	20.286	GFL11-2M □□□160C22	422
	66	1.7	80	1.6	116	1.4	1537	22.164	GFL09-2M □□□160C22	422
	64	2.6	77	2.4	113	2.1	1585	22.857	GFL11-2M □□□160C22	422
	61	1.6	73	1.6	107	1.5	1672	24.111	GFL09-2M □□□160C22	422
	59	2.5	71	2.5	104	2.4	1723	24.850	GFL11-2M □□□160C22	422
	54	1.5	65	1.5	95	1.4	1884	27.173	GFL09-2M □□□160C22	422
	53	2.2	63	2.2	92	2.1	1941	28.000	GFL11-2M □□□160C22	422
	45	2.0	54	2.0	79	1.9	2270	32.739	GFL11-2M □□□160C22	422
	40	1.8	48	1.8	70	1.7	2558	36.889	GFL11-2M □□□160C22	422
	37	1.8	44	1.8	64	1.7	2789	40.233	GFL11-2M □□□160C22	422
	32	1.6	39	1.6	57	1.5	3143	45.333	GFL11-2M □□□160C22	422
	28	2.8	34	2.8	50	2.7	3610	52.067	GFL14-2M □□□160C22	422
	25	2.8	30	2.8	44	2.6	4067	58.667	GFL14-2M □□□160C22	422
	23	1.3	28	1.3	40	1.2	4391	64.296	GFL14-3M □□□160C22	430
	23	2.3	28	2.3	41	2.2	4381	63.190	GFL14-2M □□□160C22	422
	21	1.2	26	1.2	38	1.2	4692	68.708	GFL14-3M □□□160C22	430
	21	2.2	25	2.2	36	2.2	4936	71.200	GFL14-2M □□□160C22	422
	19	1.2	23	1.2	33	1.2	5287	77.418	GFL14-3M □□□160C22	430
	17	1.1	21	1.1	30	1.1	5807	85.037	GFL14-3M □□□160C22	430

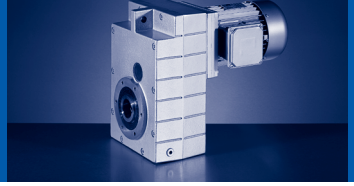

50 Hz: P_N=15.0 kW
60 Hz: P_N=18.0 kW
87 Hz: P_N=26.4 kW

n_N	1470 r/min		1770 r/min		2580 r/min		M_2 [Nm]	i		
f_N	50 Hz		60 Hz		87 Hz					
P_N	15.0 kW		18.0 kW		26.4 kW					
	n_2 [r/min]	c	n_2 [r/min]	c	n_2 [r/min]	c				
	439	2.0	528	1.9	770	1.7	317	3.350	GFL07-2M □□□160C32	422
	317	1.5	381	1.4	556	1.2	439	4.643	GFL07-2M □□□160C32	422
	285	1.7	343	1.7	500	1.5	488	5.159	GFL07-2M □□□160C32	422
	258	1.7	311	1.6	453	1.4	538	5.695	GFL07-2M □□□160C32	422
	230	1.1	277	1.0	403	0.9	605	6.400	GFL07-2M □□□160C32	422
	214	3.2	258	3.1	376	2.7	649	6.864	GFL09-2M □□□160C32	422
	206	1.4	248	1.3	361	1.1	676	7.150	GFL07-2M □□□160C32	422
	197	3.1	237	2.9	346	2.6	706	7.466	GFL09-2M □□□160C32	422
	177	1.3	213	1.2	310	1.1	787	8.324	GFL07-2M □□□160C32	422
	163	2.6	197	2.5	286	2.2	852	9.010	GFL09-2M □□□160C32	422
	157	1.1	189	1.1	275	0.9	887	9.379	GFL07-2M □□□160C32	422
	151	1.1	182	1.0	266	0.9	918	9.714	GFL07-2M □□□160C32	422
	150	2.5	181	2.4	263	2.1	926	9.799	GFL09-2M □□□160C32	422
	132	2.2	159	2.1	231	1.8	1056	11.167	GFL09-2M □□□160C32	422
	127	1.0	153	0.9	224	0.8	1091	11.538	GFL07-2M □□□160C32	422
	119	1.9	144	1.8	210	1.6	1164	12.307	GFL09-2M □□□160C32	422
	118	2.9	142	2.8	207	2.5	1180	12.480	GFL11-2M □□□160C32	422
	113	0.9	136	0.8			1229	13.000	GFL07-2M □□□160C32	422
	104	0.9	125	0.8			1343	14.200	GFL07-2M □□□160C32	422
	103	1.8	124	1.7	180	1.5	1355	14.333	GFL09-2M □□□160C32	422
	101	2.7	122	2.6	178	2.3	1374	14.538	GFL11-2M □□□160C32	422
	92	2.5	111	2.4	162	2.1	1504	15.904	GFL11-2M □□□160C32	422
	90	1.6	108	1.5	158	1.3	1544	16.333	GFL09-2M □□□160C32	422
	82	2.2	99	2.1	144	1.9	1694	17.920	GFL11-2M □□□160C32	422
	80	1.4	96	1.4	140	1.2	1740	18.407	GFL09-2M □□□160C32	422
	75	1.4	90	1.3	131	1.2	1859	19.667	GFL09-2M □□□160C32	422
	73	2.1	87	2.0	127	1.8	1918	20.286	GFL11-2M □□□160C32	422
	66	1.3	80	1.2	116	1.0	2095	22.164	GFL09-2M □□□160C32	422
	64	1.9	77	1.8	113	1.6	2161	22.857	GFL11-2M □□□160C32	422
	61	1.2	73	1.2	107	1.1	2280	24.111	GFL09-2M □□□160C32	422
	59	1.8	71	1.8	104	1.7	2349	24.850	GFL11-2M □□□160C32	422
	54	1.1	65	1.1	95	1.0	2569	27.173	GFL09-2M □□□160C32	422
	53	1.6	63	1.6	92	1.5	2647	28.000	GFL11-2M □□□160C32	422
	45	1.5	54	1.5	79	1.4	3095	32.739	GFL11-2M □□□160C32	422
	45	3.1	55	3.1	80	2.9	3058	32.344	GFL14-2M □□□160C32	422
	40	1.3	48	1.3	70	1.3	3488	36.889	GFL11-2M □□□160C32	422
	40	3.1	49	3.1	71	2.9	3446	36.444	GFL14-2M □□□160C32	422
	37	1.3	44	1.3	64	1.2	3804	40.233	GFL11-2M □□□160C32	422
	37	2.6	45	2.6	65	2.5	3748	39.642	GFL14-2M □□□160C32	422
	33	2.6	40	2.6	58	2.5	4223	44.667	GFL14-2M □□□160C32	422
	32	1.1	39	1.1	57	1.1	4286	45.333	GFL11-2M □□□160C32	422

50 Hz: P_N=15.0 kW
60 Hz: P_N=18.0 kW
87 Hz: P_N=26.4 kW

n_N	1470 r/min		1770 r/min		2580 r/min		M_2 [Nm]	i		
f_N	50 Hz		60 Hz		87 Hz					
P_N	15.0 kW		18.0 kW		26.4 kW					
	n_2 [r/min]	c	n_2 [r/min]	c	n_2 [r/min]	c				
	28	2.1	34	2.1	50	1.9	4922	52.067	GFL14-2M □□□160C32	422
	25	2.0	30	2.0	44	1.9	5546	58.667	GFL14-2M □□□160C32	422
	23	0.9	28	0.9	40	0.9	5987	64.296	GFL14-3M □□□160C32	430
	23	1.7	28	1.7	41	1.6	5974	63.190	GFL14-2M □□□160C32	422
	21	0.9	26	0.9	38	0.9	6398	68.708	GFL14-3M □□□160C32	430
	21	1.6	25	1.6	36	1.6	6731	71.200	GFL14-2M □□□160C32	422
	19	0.9	23	0.9	33	0.9	7209	77.418	GFL14-3M □□□160C32	430

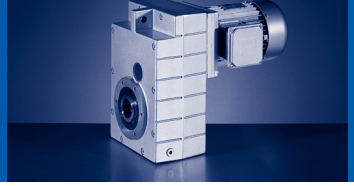

50 Hz: P_N=18.5 kW
60 Hz: P_N=22.2 kW
87 Hz: P_N=32.5 kW

n_N	1475 r/min		1775 r/min		2585 r/min		M_2 [Nm]	i		
f_N	50 Hz		60 Hz		87 Hz					
P_N	18.5 kW		22.2 kW		32.5 kW					
	n_2 [r/min]	c	n_2 [r/min]	c	n_2 [r/min]	c				
	215	2.6	259	2.5	377	2.2	798	6.864	GFL09-2M □□□180C12	422
	215	2.8	259	2.7	377	2.4	798	6.864	GFL11-2M □□□180C12	422
	198	2.5	238	2.4	346	2.1	868	7.466	GFL09-2M □□□180C12	422
	198	2.8	238	2.7	346	2.4	868	7.466	GFL11-2M □□□180C12	422
	168	2.8	202	2.7	294	2.4	1023	8.800	GFL14-2M □□□180C12	422
	164	2.1	197	2.0	287	1.8	1047	9.010	GFL09-2M □□□180C12	422
	164	2.8	197	2.7	287	2.4	1047	9.010	GFL11-2M □□□180C12	422
	154	2.8	185	2.7	270	2.4	1112	9.571	GFL14-2M □□□180C12	422
	151	2.0	181	1.9	264	1.7	1139	9.799	GFL09-2M □□□180C12	422
	151	2.8	181	2.7	264	2.4	1139	9.799	GFL11-2M □□□180C12	422
	138	2.8	166	2.7	241	2.4	1246	10.720	GFL11-2M □□□180C12	422
	132	1.8	159	1.7	232	1.5	1298	11.167	GFL09-2M □□□180C12	422
	120	1.6	144	1.5	210	1.3	1430	12.307	GFL09-2M □□□180C12	422
	118	2.4	142	2.3	207	2.0	1450	12.480	GFL11-2M □□□180C12	422
	104	2.8	125	2.7	182	2.4	1650	14.200	GFL14-2M □□□180C12	422
	103	1.4	124	1.4	180	1.2	1666	14.333	GFL09-2M □□□180C12	422
	102	2.2	122	2.1	178	1.8	1689	14.538	GFL11-2M □□□180C12	422
	94	2.8	114	2.7	166	2.4	1815	15.620	GFL14-2M □□□180C12	422
	93	2.1	112	1.9	163	1.7	1848	15.904	GFL11-2M □□□180C12	422
	90	1.3	109	1.2	158	1.1	1898	16.333	GFL09-2M □□□180C12	422
	84	2.8	101	2.7	147	2.4	2045	17.600	GFL14-2M □□□180C12	422
	82	1.8	99	1.7	144	1.5	2082	17.920	GFL11-2M □□□180C12	422
	80	1.2	96	1.1	140	1.0	2139	18.407	GFL09-2M □□□180C12	422
	75	1.1	90	1.1	131	0.9	2285	19.667	GFL09-2M □□□180C12	422
	74	2.8	89	2.7	130	2.4	2318	19.948	GFL14-2M □□□180C12	422
	73	1.7	88	1.6	127	1.4	2357	20.286	GFL11-2M □□□180C12	422
	67	1.0	80	1.0	117	0.9	2576	22.164	GFL09-2M □□□180C12	422
	66	2.8	79	2.7	115	2.4	2612	22.476	GFL14-2M □□□180C12	422
	65	1.5	78	1.4	113	1.3	2656	22.857	GFL11-2M □□□180C12	422
	61	1.0	74	1.0	107	0.9	2802	24.111	GFL09-2M □□□180C12	422
	60	2.7	73	2.7	106	2.5	2842	24.456	GFL14-2M □□□180C12	422
	59	1.5	71	1.5	104	1.4	2888	24.850	GFL11-2M □□□180C12	422
	54	0.9	65	0.9	95	0.8	3158	27.173	GFL09-2M □□□180C12	422
	54	2.7	64	2.7	94	2.5	3202	27.556	GFL14-2M □□□180C12	422
	53	1.3	63	1.3	92	1.2	3254	28.000	GFL11-2M □□□180C12	422
	46	2.1	55	2.1	80	2.0	3759	32.344	GFL14-2M □□□180C12	422
	45	1.2	54	1.2	79	1.2	3804	32.739	GFL11-2M □□□180C12	422
	41	2.1	49	2.1	71	2.0	4235	36.444	GFL14-2M □□□180C12	422
	40	1.1	48	1.1	70	1.0	4287	36.889	GFL11-2M □□□180C12	422
	37	1.0	44	1.0	64	1.0	4675	40.233	GFL11-2M □□□180C12	422
	37	1.8	45	1.8	65	1.7	4607	39.642	GFL14-2M □□□180C12	422

50 Hz: P_N=18.5 kW
60 Hz: P_N=22.2 kW
87 Hz: P_N=32.5 kW

n_N	1475 r/min		1775 r/min		2585 r/min		M_2 [Nm]	i		
f_N	50 Hz		60 Hz		87 Hz					
P_N	18.5 kW		22.2 kW		32.5 kW					
	n_2 [r/min]	c	n_2 [r/min]	c	n_2 [r/min]	c				
	33	0.9	39	0.9	57	0.9	5268	45.333	GFL11-2M □□□180C12	422
	33	1.8	40	1.8	58	1.7	5191	44.667	GFL14-2M □□□180C12	422
	28	1.4	34	1.4	50	1.4	6050	52.067	GFL14-2M □□□180C12	422
	25	1.4	30	1.4	44	1.4	6817	58.667	GFL14-2M □□□180C12	422
	23	1.2	28	1.2	41	1.2	7343	63.190	GFL14-2M □□□180C12	422
	21	1.2	25	1.2	36	1.2	8274	71.200	GFL14-2M □□□180C12	422

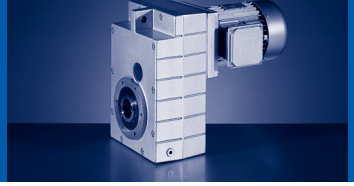

50 Hz: P_N=22.0 kW
60 Hz: P_N=26.4 kW
87 Hz: P_N=38.7 kW

n_N	1470 r/min		1770 r/min		2580 r/min		M_2 [Nm]	i		
f_N	50 Hz		60 Hz		87 Hz					
P_N	22.0 kW		26.4 kW		38.7 kW					
	n_2 [r/min]	c	n_2 [r/min]	c	n_2 [r/min]	c				
	214	2.2	258	2.1	376	1.8	952	6.864	GFL09-2M □□□180C32	422
	214	3.1	258	2.9	376	2.6	952	6.864	GFL11-2M □□□180C32	422
	197	2.1	237	2.0	346	1.7	1035	7.466	GFL09-2M □□□180C32	422
	197	3.1	237	2.9	346	2.6	1035	7.466	GFL11-2M □□□180C32	422
	167	3.2	201	3.0	293	2.6	1220	8.800	GFL14-2M □□□180C32	422
	163	1.8	197	1.7	286	1.5	1249	9.010	GFL09-2M □□□180C32	422
	163	2.9	197	2.8	286	2.4	1249	9.010	GFL11-2M □□□180C32	422
	154	3.2	185	3.0	270	2.6	1327	9.571	GFL14-2M □□□180C32	422
	150	1.7	181	1.6	263	1.4	1359	9.799	GFL09-2M □□□180C32	422
	150	2.8	181	2.6	263	2.3	1359	9.799	GFL11-2M □□□180C32	422
	137	2.6	165	2.4	241	2.1	1486	10.720	GFL11-2M □□□180C32	422
	132	1.5	159	1.4	231	1.2	1548	11.167	GFL09-2M □□□180C32	422
	119	1.3	144	1.2	210	1.1	1706	12.307	GFL09-2M □□□180C32	422
	118	2.0	142	1.9	207	1.7	1731	12.480	GFL11-2M □□□180C32	422
	104	3.2	125	3.0	182	2.6	1969	14.200	GFL14-2M □□□180C32	422
	103	1.2	124	1.1	180	1.0	1988	14.333	GFL09-2M □□□180C32	422
	101	1.8	122	1.8	178	1.5	2016	14.538	GFL11-2M □□□180C32	422
	94	3.1	113	2.9	165	2.6	2166	15.620	GFL14-2M □□□180C32	422
	92	1.7	111	1.6	162	1.4	2205	15.904	GFL11-2M □□□180C32	422
	90	1.1	108	1.0	158	0.9	2265	16.333	GFL09-2M □□□180C32	422
	84	3.1	101	2.9	147	2.6	2440	17.600	GFL14-2M □□□180C32	422
	82	1.5	99	1.4	144	1.3	2485	17.920	GFL11-2M □□□180C32	422
	80	1.0	96	0.9	140	0.8	2552	18.407	GFL09-2M □□□180C32	422
	75	0.9	90	0.9			2727	19.667	GFL09-2M □□□180C32	422
	74	2.9	89	2.8	129	2.4	2766	19.948	GFL14-2M □□□180C32	422
	73	1.4	87	1.4	127	1.2	2813	20.286	GFL11-2M □□□180C32	422
	66	0.9	80	0.8			3073	22.164	GFL09-2M □□□180C32	422
	65	2.9	79	2.8	115	2.4	3117	22.476	GFL14-2M □□□180C32	422
	64	1.3	77	1.2	113	1.1	3169	22.857	GFL11-2M □□□180C32	422
	61	0.8	73	0.8			3343	24.111	GFL09-2M □□□180C32	422
	60	2.6	72	2.6	106	2.5	3391	24.456	GFL14-2M □□□180C32	422
	59	1.2	71	1.2	104	1.2	3446	24.850	GFL11-2M □□□180C32	422
	53	1.1	63	1.1	92	1.0	3883	28.000	GFL11-2M □□□180C32	422
	53	2.6	64	2.6	94	2.5	3821	27.556	GFL14-2M □□□180C32	422
	45	1.0	54	1.0	79	1.0	4540	32.739	GFL11-2M □□□180C32	422
	45	2.1	55	2.1	80	2.0	4485	32.344	GFL14-2M □□□180C32	422
	40	0.9	48	0.9	70	0.9	5115	36.889	GFL11-2M □□□180C32	422
	40	2.1	49	2.1	71	2.0	5053	36.444	GFL14-2M □□□180C32	422
	37	0.9	44	0.9	64	0.8	5579	40.233	GFL11-2M □□□180C32	422
	37	1.8	45	1.8	65	1.7	5497	39.642	GFL14-2M □□□180C32	422
	33	1.8	40	1.8	58	1.7	6194	44.667	GFL14-2M □□□180C32	422

50 Hz: P_N=22.0 kW
60 Hz: P_N=26.4 kW
87 Hz: P_N=38.7 kW

n_N	1470 r/min		1770 r/min		2580 r/min		M_2 [Nm]	i		
f_N	50 Hz		60 Hz		87 Hz					
P_N	22.0 kW		26.4 kW		38.7 kW					
	n_2 [r/min]	c	n_2 [r/min]	c	n_2 [r/min]	c				
	28	1.4	34	1.4	50	1.3	7220	52.067	GFL14-2M □□□180C32	422
	25	1.4	30	1.4	44	1.3	8135	58.667	GFL14-2M □□□180C32	422
	23	1.1	28	1.1	41	1.1	8762	63.190	GFL14-2M □□□180C32	422
	21	1.1	25	1.1	36	1.1	9873	71.200	GFL14-2M □□□180C32	422

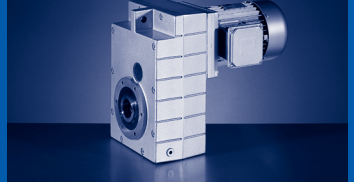

50 Hz: P_N=30.0 kW
60 Hz: P_N=36.0 kW
87 Hz: P_N=52.7 kW

n_N	1465 r/min		1765 r/min		2575 r/min		M_2 [Nm]	i		
f_N	50 Hz		60 Hz		87 Hz					
P_N	30.0 kW		36.0 kW		52.7 kW					
	n_2 [r/min]	c	n_2 [r/min]	c	n_2 [r/min]	c				
	213	1.6	257	1.5			1302	6.864	GFL09-2M □□□180C42	422
	213	2.3	257	2.2			1302	6.864	GFL11-2M □□□180C42	422
	196	1.5	236	1.4			1416	7.466	GFL09-2M □□□180C42	422
	196	2.3	236	2.2			1416	7.466	GFL11-2M □□□180C42	422
	167	2.3	201	2.2			1670	8.800	GFL14-2M □□□180C42	422
	163	1.3	196	1.2			1709	9.010	GFL09-2M □□□180C42	422
	163	2.1	196	2.0			1709	9.010	GFL11-2M □□□180C42	422
	153	2.3	184	2.2			1816	9.571	GFL14-2M □□□180C42	422
	150	1.2	180	1.2			1859	9.799	GFL09-2M □□□180C42	422
	150	2.0	180	1.9			1859	9.799	GFL11-2M □□□180C42	422
	137	1.9	165	1.8			2034	10.720	GFL11-2M □□□180C42	422
	131	1.1	158	1.0			2119	11.167	GFL09-2M □□□180C42	422
	119	1.0	143	0.9			2335	12.307	GFL09-2M □□□180C42	422
	117	1.5	141	1.4			2368	12.480	GFL11-2M □□□180C42	422
	103	2.3	124	2.2			2694	14.200	GFL14-2M □□□180C42	422
	102	0.9	123	0.8			2719	14.333	GFL09-2M □□□180C42	422
	101	1.4	121	1.3			2758	14.538	GFL11-2M □□□180C42	422
	94	2.3	113	2.2			2964	15.620	GFL14-2M □□□180C42	422
	92	1.3	111	1.2			3017	15.904	GFL11-2M □□□180C42	422
	83	2.3	100	2.2			3339	17.600	GFL14-2M □□□180C42	422
	82	1.1	99	1.1			3400	17.920	GFL11-2M □□□180C42	422
	73	2.1	89	2.0			3785	19.948	GFL14-2M □□□180C42	422
	72	1.1	87	1.0			3849	20.286	GFL11-2M □□□180C42	422
	65	2.1	79	2.0			4264	22.476	GFL14-2M □□□180C42	422
	64	0.9	77	0.9			4337	22.857	GFL11-2M □□□180C42	422
	60	1.9	72	1.9			4640	24.456	GFL14-2M □□□180C42	422
	59	0.9	71	0.9			4715	24.850	GFL11-2M □□□180C42	422
	53	1.9	64	1.9			5228	27.556	GFL14-2M □□□180C42	422
	52	0.8	63	0.8			5312	28.000	GFL11-2M □□□180C42	422
	45	1.5	55	1.5			6137	32.344	GFL14-2M □□□180C42	422
	40	1.5	48	1.5			6915	36.444	GFL14-2M □□□180C42	422
	37	1.3	45	1.3			7521	39.642	GFL14-2M □□□180C42	422
	33	1.3	40	1.3			8474	44.667	GFL14-2M □□□180C42	422
	28	1.0	34	1.0			9878	52.067	GFL14-2M □□□180C42	422
	25	1.0	30	1.0			11131	58.667	GFL14-2M □□□180C42	422
	23	0.8	28	0.8			11989	63.190	GFL14-2M □□□180C42	422

50 Hz: P_N=37.0 kW
60 Hz: P_N=45.0 kW
87 Hz: P_N=64.0 kW

n_N	1483 r/min		1783 r/min		2593 r/min		M_2 [Nm]	i		
f_N	50 Hz		60 Hz		87 Hz					
P_N	37.0 kW		45.0 kW		64.0 kW					
	n_2 [r/min]	c	n_2 [r/min]	c	n_2 [r/min]	c				
	216	2.1	260	2.0			1587	6.864	GFL11-2M □□□225C12	422
	199	2.1	239	1.9			1726	7.466	GFL11-2M □□□225C12	422
	169	3.2	203	3.0			2034	8.800	GFL14-2M □□□225C12	422
	165	1.8	198	1.7			2083	9.010	GFL11-2M □□□225C12	422
	155	3.2	186	3.0			2213	9.571	GFL14-2M □□□225C12	422
	151	1.7	182	1.6			2265	9.799	GFL11-2M □□□225C12	422
	138	1.5	166	1.5			2478	10.720	GFL11-2M □□□225C12	422
	129	3.1	155	2.9			2667	11.538	GFL14-2M □□□225C12	422
	119	1.2	143	1.1			2885	12.480	GFL11-2M □□□225C12	422
	114	2.8	137	2.7			3005	13.000	GFL14-2M □□□225C12	422
	104	2.7	126	2.5			3282	14.200	GFL14-2M □□□225C12	422
	102	1.1	123	1.0			3361	14.538	GFL11-2M □□□225C12	422
	95	2.5	114	2.4			3611	15.620	GFL14-2M □□□225C12	422
	93	1.0	112	1.0			3676	15.904	GFL11-2M □□□225C12	422
	84	2.3	101	2.2			4068	17.600	GFL14-2M □□□225C12	422
	83	0.9	100	0.9			4142	17.920	GFL11-2M □□□225C12	422
	74	2.1	89	2.0			4611	19.948	GFL14-2M □□□225C12	422
	73	0.9	88	0.8			4689	20.286	GFL11-2M □□□225C12	422
	66	1.9	79	1.8			5196	22.476	GFL14-2M □□□225C12	422
	61	1.8	73	1.8			5653	24.456	GFL14-2M □□□225C12	422
	54	1.7	65	1.7			6370	27.556	GFL14-2M □□□225C12	422
	46	1.5	55	1.5			7477	32.344	GFL14-2M □□□225C12	422
	41	1.4	49	1.4			8424	36.444	GFL14-2M □□□225C12	422

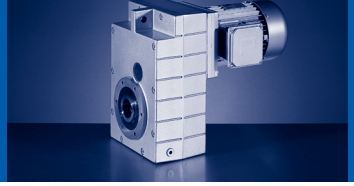

50 Hz: P_N=45.0 kW
60 Hz: P_N=54.0 kW
87 Hz: P_N=78.0 kW

n_N	1480 r/min		1780 r/min		2590 r/min		M_2 [Nm]	i		
f_N	50 Hz		60 Hz		87 Hz					
P_N	45.0 kW		54.0 kW		78.0 kW					
	n_2 [r/min]	c	n_2 [r/min]	c	n_2 [r/min]	c				
	216	1.7	259	1.6			1934	6.864	GFL11-2M □□□225C22	422
	207	2.7	249	2.6			2014	7.150	GFL14-2M □□□225C22	422
	198	1.7	238	1.6			2103	7.466	GFL11-2M □□□225C22	422
	190	2.7	229	2.6			2191	7.777	GFL14-2M □□□225C22	422
	168	2.6	202	2.5			2479	8.800	GFL14-2M □□□225C22	422
	164	1.5	198	1.4			2538	9.010	GFL11-2M □□□225C22	422
	155	2.6	186	2.5			2696	9.571	GFL14-2M □□□225C22	422
	151	1.4	182	1.3			2761	9.799	GFL11-2M □□□225C22	422
	138	1.3	166	1.2			3020	10.720	GFL11-2M □□□225C22	422
	128	2.5	154	2.4			3250	11.538	GFL14-2M □□□225C22	422
	119	1.0	143	0.9			3516	12.480	GFL11-2M □□□225C22	422
	114	2.3	137	2.2			3662	13.000	GFL14-2M □□□225C22	422
	104	2.2	125	2.1			4000	14.200	GFL14-2M □□□225C22	422
	102	0.9	122	0.9			4096	14.538	GFL11-2M □□□225C22	422
	95	2.1	114	2.0			4400	15.620	GFL14-2M □□□225C22	422
	93	0.9	112	0.8			4480	15.904	GFL11-2M □□□225C22	422
	84	1.9	101	1.8			4958	17.600	GFL14-2M □□□225C22	422
	74	1.8	89	1.7			5619	19.948	GFL14-2M □□□225C22	422
	66	1.6	79	1.5			6332	22.476	GFL14-2M □□□225C22	422
	61	1.5	73	1.5			6889	24.456	GFL14-2M □□□225C22	422
	54	1.4	65	1.4			7763	27.556	GFL14-2M □□□225C22	422
	46	1.2	55	1.2			9112	32.344	GFL14-2M □□□225C22	422
	41	1.1	49	1.1			10267	36.444	GFL14-2M □□□225C22	422

GFL□□-2M H□R

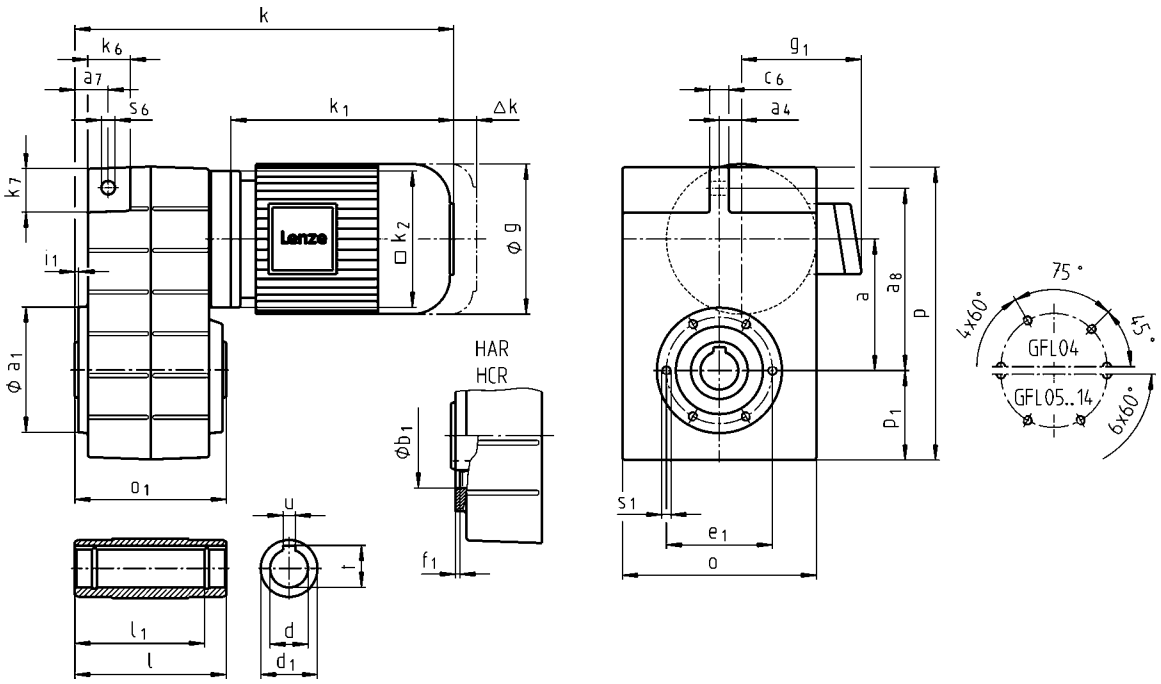

		063C11 063C12 063C31 063C32	063C42	071C11	071C13 071C31 071C32 071C33 071C42	080C11	080C13 080C31 080C32 080C33 080C42	090C11	090C31	090C32	100C12
g		123		139		156		176			194
g_1	MDEMAXX	100		109		141		146			157
	MDEMABR	107		118		132		137			147
k_1	MDEMAXX	187		207		224.5		274		248	309
k_2		120				145		180			
Δ k	MDEMABR	40		52		73		68			76
	MDFMAXX	128									109
	MDFMABR	170		165		183		181			170
		k									
	GFL04	312		332		354					
	GFL05		333	353		376		435		409	470
	GFL06		346		366	389		448		422	483
	GFL07						422	481		455	516
	GFL09								515	489	550
	GFL11										591

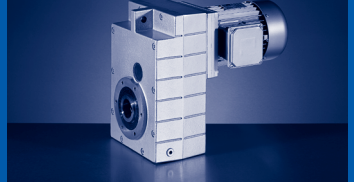

		100C31	100C32 100C41	112C22 112C31	112C32 112C41	132C21 132C22 132C32	160C22	160C32	180C12 180C32	180C42	225C12 225C22
g		194		218		258	310		348		447
g_1	MDEMAXX	157		167		195	210		230		346
	MDEMABR	147		158		187	210		230		346
k_1	MDEMAXX	309		319	363	403	457.5	501.5	561	618	848
k_2		180		222		265			300		
Δ k	MDEMABR	76		90		109.5	105		113		
	MDFMAXX	109		102		115	149			155	213
	MDFMABR	170		183		201.5	179		215		213
		k									
GFL05		470									
GFL06		483		499	543						
GFL07		516		532	576	624	684	728			
GFL09		550		566	610	658	718	762	821	878	
GFL11			591	607	651	699	759	803	862	919	1149
GFL14				652	696	744	804	848	907	964	1194

	a	a_4	a_7	a_8	c_6	k_6	k_7	o[1)]	p[1)]	p_1	s_6
GFL04	90.5	12.5	22.5	128	14	32	35	148	214	69	12.5
GFL05	112.5	18.5	29	155	16	35	38	165	252	78	14
GFL06	140	22	35	195	20	46	46	206	315	98	14
GFL07	173	29	44	240	25	56	56	256	386	118	18
GFL09	220	37.5	50	300	32	70	70	318	486	149	22
GFL11	276.5	50	65	375	40	84	90	395	600	181	26
GFL14	339	65	80	455	50	100	114	490	740	228	32

	d[2)]	d_1	l	l_1	u	t	i_1	o_1	a_1	b_1	e_1	f_1	s_1
	H7				JS9	+0,2				H7			
GFL04	25 30	45 45	115 115	100 100	8 8	28.3 33.3	2.5 2.5	115 115	110	75	90	3	M6x12
GFL05	30 35	50 50	140 140	124 124	8 10	33.3 38.3	4 4	140 140	118	80	100	4	M8x14
GFL06	40 45	65 65	160 160	140 140	12 14	43.3 48.8	5 5	160 160	140	100	120	4	M10x16
GFL07	50 55	75 75	200 200	175 175	14 16	53.8 59.3	5 5	200 200	165	115	140	5	M12x18
GFL09	60 70	95 95	240 240	210 210	18 20	64.4 74.9	5 5	240 240	205	145	175	6	M16x24
GFL11	70 80	105 105	290 290	250 250	20 22	74.9 85.4	6 6	290 290	240	140	205	6	M20x32
GFL14	100	135	350	305	28	106.4	7	350	290	170	250	6	M24x35

1) k_2 !
2) Not suitable for through machine shaft at motor end:
GFL04-2M H□□ 080C□□; d=30
GFL05-2M H□□ 100C□□; d=35
GFL07-2M H□□ 160C□□; d=50/55
GFL11-2M H□□ 225C□□; d=80

GFL□□-2M HCK

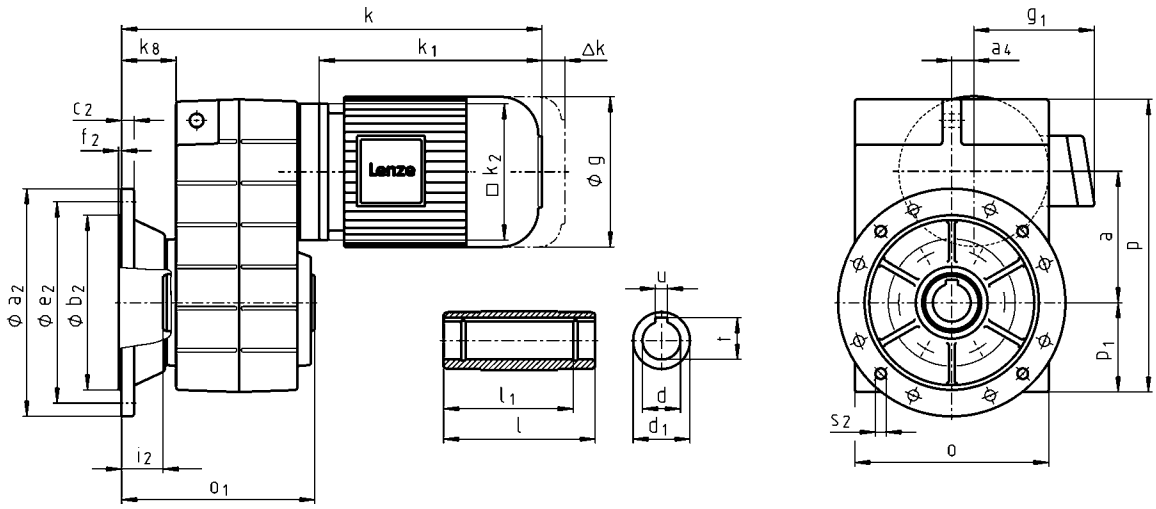

		063C11 063C12 063C31 063C32	063C42	071C11	071C13 071C31 071C32 071C33 071C42	080C11	080C13 080C31 080C32 080C33 080C42	090C11	090C31	090C32	100C12
g		123		139		156		176			194
g_1	MDEMAXX	100		109		141		146			157
	MDEMABR	107		118		132		137			147
k_1	MDEMAXX	187		207		224.5		274		248	309
k_2		120				145		180			
Δ k	MDEMABR	40		52		73		68			76
	MDFMAXX	128									109
	MDFMABR	170		165		183		181			170
		k									
GFL04		345		365		387					
GFL05			366	386		409		468		442	503
GFL06			387		407	430		489		463	524
GFL07							477	536		510	571
GFL09									575	549	610
GFL11											651

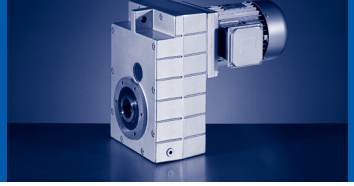

		100C31	100C32 100C41	112C22 112C31	112C32 112C41	132C21 132C22 132C32	160C22	160C32	180C12 180C32	180C42	225C12 225C22
g		194		218		258	310		348		447
g_1	MDEMAXX	157		167		195	210		230		346
	MDEMABR	147		158		187	210		230		346
k_1	MDEMAXX	309		319	363	403	457.5	501.5	561	618	848
k_2		180		222		265			300		
Δ k	MDEMABR	76		90		109.5	105		113		
	MDFMAXX	109		102		115	149			155	213
	MDFMABR	170		183		201.5	179		215		213
		k									
GFL05		503									
GFL06		524		540	584						
GFL07		571		587	631	679	739	783			
GFL09		610		626	670	718	778	822	881	938	
GFL11			651	667	711	759	819	863	922	979	1209
GFL14				712	756	804	864	908	967	1024	1254

	a	a_4	k_8	o[1]	p[1]	p_1
GFL04	90.5	12.5	41.8	148	214	69
GFL05	112.5	18.5	46	165	252	78
GFL06	140	22	55.5	206	315	98
GFL07	173	29	72.5	256	386	118
GFL09	220	37.5	77.5	318	486	149
GFL11	276.5	50	85.5	395	600	181
GFL14	339	65	89.5	490	740	228

	d[2]	d_1	l	l_1	u	t	i_2	o_1	a_2	b_2	c_2	e_2	f_2	s_2
	H7				JS9	+0,2				j7				
GFL04	25 30	45 45	115 115	100 100	8 8	28.3 33.3	33 33	148 148	160	110	10	130	3.5	4 x 9
GFL05	30 35	50 50	140 140	124 124	8 10	33.3 38.3	33 33	173 173	200	130	12	165	4	4 x 11
GFL06	40 45	65 65	160 160	140 140	12 14	43.3 48.8	42 41	201 201	250	180	15	215	4	4 x 14
GFL07	50 55	75 75	200 200	175 175	14 16	53.8 59.3	55 55	255 255	250 300	180 230	15 17	215 265	4 4	4 x 14 4 x 14
GFL09	60 70	95 95	240 240	210 210	18 20	64.4 74.9	60 60	300 300	350	250	18	300	4	4 x 17.5
GFL11	70 80	105 105	290 290	250 250	20 22	74.9 85.4	60 60	350 350	400 450	300 350	20 22	350 400	5 5	4 x 17.5 8 x 17.5
GFL14	100	135	350	305	28	106.4	60	410	450	350	22	400	5	8 x 18.5

[1] k_2 !
[2] Not suitable for through machine shaft at motor end:
GFL04-2M H□□ 080C□□; d=30
GFL05-2M H□□ 100C□□; d=35
GFL07-2M H□□ 160C□□; d=50/55
GFL11-2M H□□ 225C□□; d=80

GFL□□-2M V□R

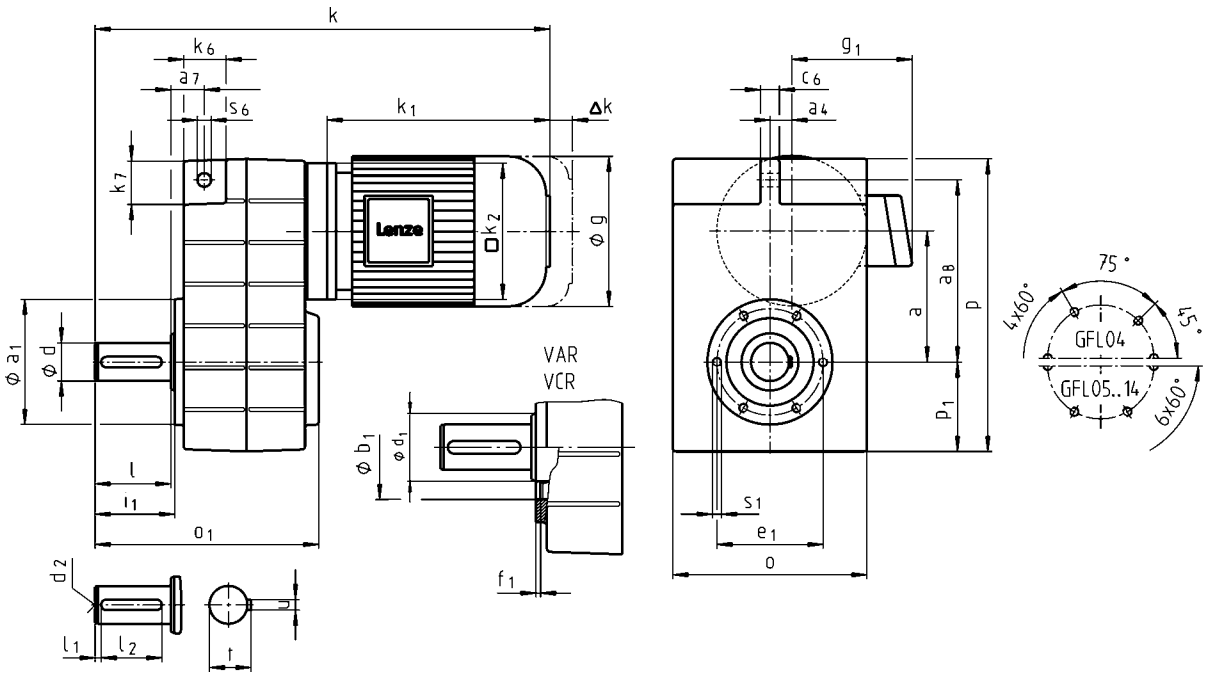

		063C11 063C12 063C31 063C32	063C42	071C11	071C13 071C31 071C32 071C33 071C42	080C11	080C13 080C31 080C32 080C33 080C42	090C11	090C31	090C32	100C12
g		123		139		156		176			194
g_1	MDEMAXX	100		109		141		146			157
	MDEMABR	107		118		132		137			147
k_1	MDEMAXX	187		207		224.5		274		248	309
k_2		120				145		180			
Δ k	MDEMABR	40		52		73		68			76
	MDFMAXX	128									109
	MDFMABR	170		165		183		181			170
		k									
	GFL04	362		382		404		464		438	
	GFL05		393	413		436		495		469	530
	GFL06		426		446	469		528		502	563
	GFL07						522	581		555	616
	GFL09								635	609	670
	GFL11										751

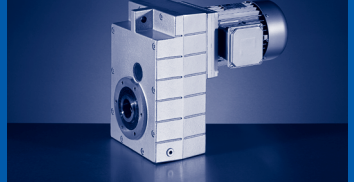

		100C31	100C32 100C41	112C22 112C31	112C32 112C41	132C21 132C22 132C32	160C22	160C32	180C12 180C32	180C42	225C12 225C22
g		194		218		258	310		348		447
g_1	MDEMAXX	157		167		195	210		230		346
	MDEMABR	147		158		187	210		230		346
k_1	MDEMAXX	309		319	363	403	457.5	501.5	561	618	848
k_2		180		222		265	300				
Δ k	MDEMABR	76		90		109.5	105		113		
	MDFMAXX	109		102		115	149			155	213
	MDFMABR	170		183		201.5	179		215		213
		k									
GFL05		530									
GFL06		563		579	623						
GFL07		616		632	676	724	784	828			
GFL09		670		686	730	778	838	882	941	998	
GFL11			751	767	811	859	919	963	1022	1079	1309
GFL14				852	896	944	1004	1048	1107	1164	1394

	a	a_4	a_7	a_8	c_6	k_6	k_7	o[1)]	p[1)]	p_1	s_6
GFL04	90.5	12.5	22.5	128	14	32	35	148	214	69	12.5
GFL05	112.5	18.5	29	155	16	35	38	165	252	78	14
GFL06	140	22	35	195	20	46	46	206	315	98	14
GFL07	173	29	44	240	25	56	56	256	386	118	18
GFL09	220	37.5	50	300	32	70	70	318	486	149	22
GFL11	276.5	50	65	375	40	84	90	395	600	181	26
GFL14	339	65	80	455	50	100	114	490	740	228	32

	d	d	d_1	d_2	l	l_1	l_2	u	t	o_1	a_1	b_1	e_1	f_1	s_1
	k6	m6										H7			
GFL04	25		45	M10	50	6	40	8	28	162.5	110	75	90	3	M6x12
GFL05	30		45	M10	60	6	45	8	33	196.5	118	80	100	4	M8x14
GFL06	40		65	M16	80	7	63	12	43	235.5	140	100	120	4	M10x16
GFL07	50		75	M16	100	8	80	14	53.5	295.5	165	115	140	5	M12x18
GFL09		60	95	M20	120	8	100	18	64	355.5	205	145	175	6	M16x24
GFL11		80	105	M20	160	15	125	22	85	444.5	240	140	205	6	M20x32
GFL14		100	135	M24	200	18	160	28	106	543.5	290	170	250	6	M24x35

[1)] k_2 !

GFL□□-2M VCK

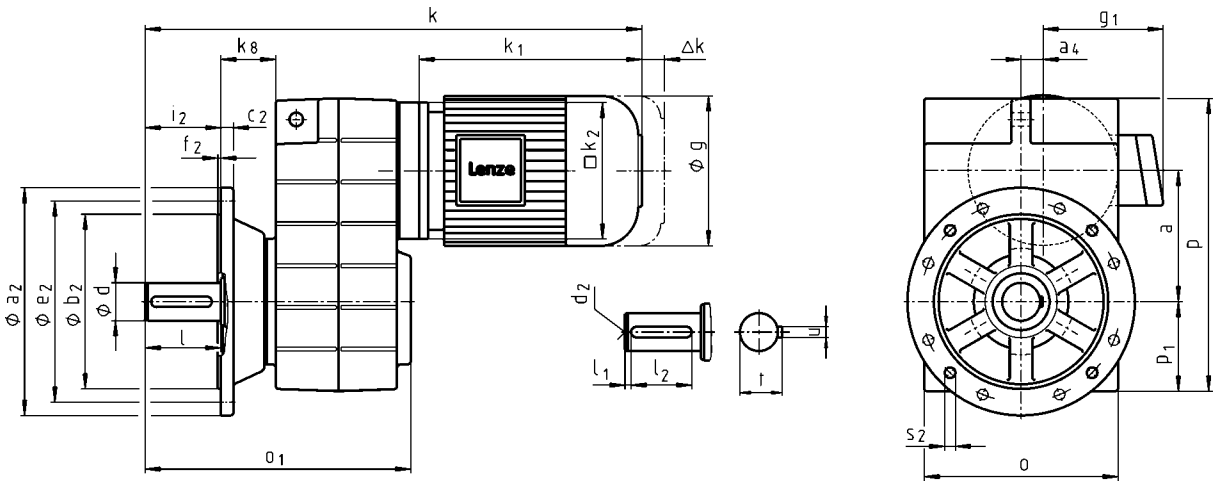

		063C11 063C12 063C31 063C32	063C42	071C11	071C13 071C31 071C32 071C33 071C42	080C11	080C13 080C31 080C32 080C33 080C42	090C11	090C31	090C32	100C12
g		123		139		156		176			194
g_1	MDEMAXX	100		109		141		146			157
	MDEMABR	107		118		132		137			147
k_1	MDEMAXX	187		207		224.5		274		248	309
k_2		120				145		180			
Δ k	MDEMABR	40		52		73		68			76
	MDFMAXX	128									109
	MDFMABR	170		165		183		181			170
		k									
GFL04		395		415		437		497		471	
GFL05			426	446		469		528		502	563
GFL06			467		487	510		569		543	604
GFL07							577	636		610	671
GFL09									695	669	730
GFL11											811

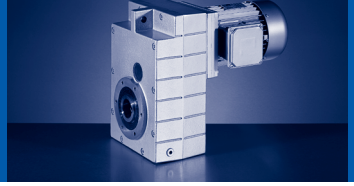

		100C31	100C32 100C41	112C22 112C31	112C32 112C41	132C21 132C22 132C32	160C22	160C32	180C12 180C32	180C42	225C12 225C22
g		194		218		258	310		348		447
g_1	MDEMAXX	157		167		195	210		230		346
	MDEMABR	147		158		187	210		230		346
k_1	MDEMAXX	309		319	363	403	457.5	501.5	561	618	848
k_2		180		222		265	300				
Δ k	MDEMABR	76		90		109.5	105		113		
	MDFMAXX	109		102		115	149			155	213
	MDFMABR	170		183		201.5	179		215		213
		k									
GFL05		563									
GFL06		604		620	664						
GFL07		671		687	731	779	839	883			
GFL09		730		746	790	838	898	942	1001	1058	
GFL11			811	827	871	919	979	1023	1082	1139	1369
GFL14				912	956	1004	1064	1108	1167	1224	1454

	a	a_4	k_8	o[1)]	p[1)]	p_1
GFL04	90.5	12.5	41.8	148	214	69
GFL05	112.5	18.5	46	165	252	78
GFL06	140	22	55.5	206	315	98
GFL07	173	29	72.5	256	386	118
GFL09	220	37.5	77.5	318	486	149
GFL11	276.5	50	85.5	395	600	181
GFL14	339	65	89.5	490	740	228

	d	d	d_1	d_2	l	l_1	l_2	u	t	i_2	o_1	a_2	b_2	c_2	e_2	f_2	s_2
	k6	m6											j7				
GFL04	25		45	M10	50	6	40	8	28	50	195.5	160	110	10	130	3.5	4 x 9
GFL05	30		45	M10	60	6	45	8	33	60	229.5	200	130	12	165	4	4 x 11
GFL06	40		65	M16	80	7	63	12	43	80	276.5	250	180	15	215	4	4 x 14
GFL07	50		75	M16	100	8	80	14	53.5	100	350.5	250 300	180 230	15 17	215 265	4 4	4 x 14 4 x 14
GFL09		60	95	M20	120	8	100	18	64	120	415.5	350	250	18	300	4	4 x 17.5
GFL11		80	105	M20	160	15	125	22	85	160	504.5	400 450	300 350	20 22	350 400	5 5	4 x 17.5 8 x 17.5
GFL14		100	135	M24	200	18	160	28	106	200	603.5	450	350	22	400	5	8 x 18.5

[1)] k_2 !

GFL□□-3M H□R

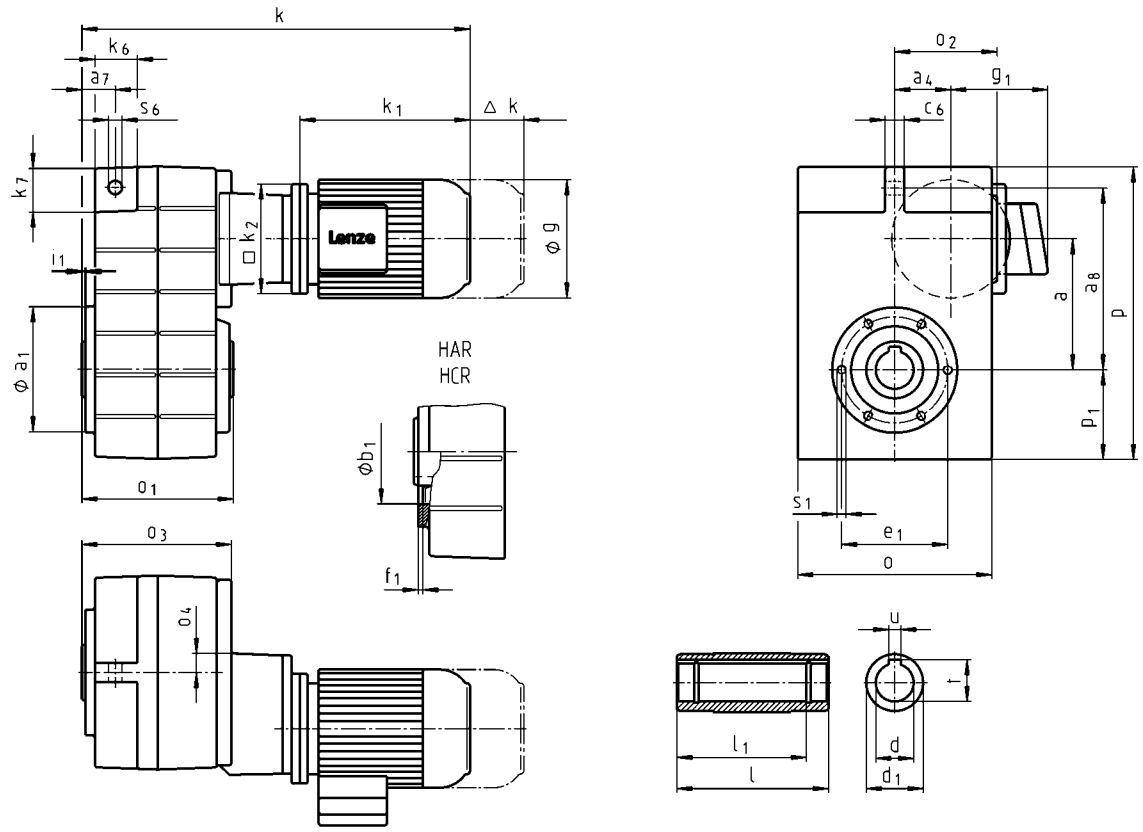

		063C11 063C12 063C31 063C32	063C42	071C11 071C13 071C31 071C32 071C33 071C42	080C11 080C13 080C31	080C32 080C33 080C42	090C11 090C31	090C32	100C12 100C31
g		123		139	156		176		194
g_1	MDEMAXX	100		109	141		146		157
	MDEMABR	107		118	132		137		147
k_1	MDEMAXX	187		207	224.5		274	248	309
k_2		120			145		180		
Δ k	MDEMABR	40		52	73		68		76
	MDFMAXX	128							109
	MDFMABR	170		165	183		181		170
		k							
GFL05		410		430	452				
GFL06		440		460	482		542		
GFL07			484	504	526		586	560	621
GFL09			536	556	578		638	612	673
GFL11					638		698	672	733
GFL14							777	751	812

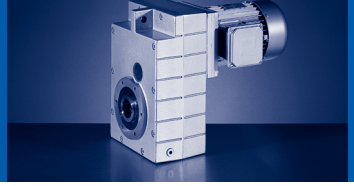

		100C32	100C41	112C22 112C31	112C32	112C41	132C21 132C22 132C32	160C22	160C32
g		194		218			258	310	
g_1	MDEMAXX	157		167			195	210	
	MDEMABR	147		158			187	210	
k_1	MDEMAXX	309		319	363		403	457.5	501.5
k_2		180		222			265	300	
Δ k	MDEMABR	76		90			109.5	105	
	MDFMAXX	109		102			115	149	
	MDFMABR	170		183			201.5	179	
		k							
GFL07			621						
GFL09		673		689		733			
GFL11		733		749	793		841		
GFL14		812		828	872		920	979	1023

	a	a_4	a_7	a_8	c_6	k_6	k_7	o[1)]	o_2	o_3	o_4	p[1)]	p_1	s_6
GFL05	112.5	54.5	29	155	16	35	38	165	106.5	140.5	22.6	252	78	14
GFL06	140	58	35	195	20	46	46	206	111	159.5	20.2	315	98	14
GFL07	173	74	44	240	25	56	56	256	135	199	24	386	118	18
GFL09	220	93.5	50	300	32	70	70	318	170	237.5	27	486	149	22
GFL11	276.5	120	65	375	40	84	90	395	216	284.5	33.5	600	181	26
GFL14	339	154	80	455	50	100	114	490	271	339.5	38	740	228	32

	d	d_1	l	l_1	u	t	i_1	o_1	a_1	b_1	e_1	f_1	s_1
	H7				JS9	+0,2				H7			
GFL05	30 35	50 50	140 140	124 124	8 10	33.3 38.3	4 4	140 140	118	80	100	4	M8x14
GFL06	40 45	65 65	160 160	140 140	12 14	43.3 48.8	5 5	160 160	140	100	120	4	M10x16
GFL07	50 55	75 75	200 200	175 175	14 16	53.8 59.3	5 5	200 200	165	115	140	5	M12x18
GFL09	60 70	95 95	240 240	210 210	18 20	64.4 74.9	5 5	240 240	205	145	175	6	M16x24
GFL11	70 80	105 105	290 290	250 250	20 22	74.9 85.4	6 6	290 290	240	140	205	6	M20x32
GFL14	100	135	350	305	28	106.4	7	350	290	170	250	6	M24x35

[1)] k_2 !

GFL□□-3M HCK

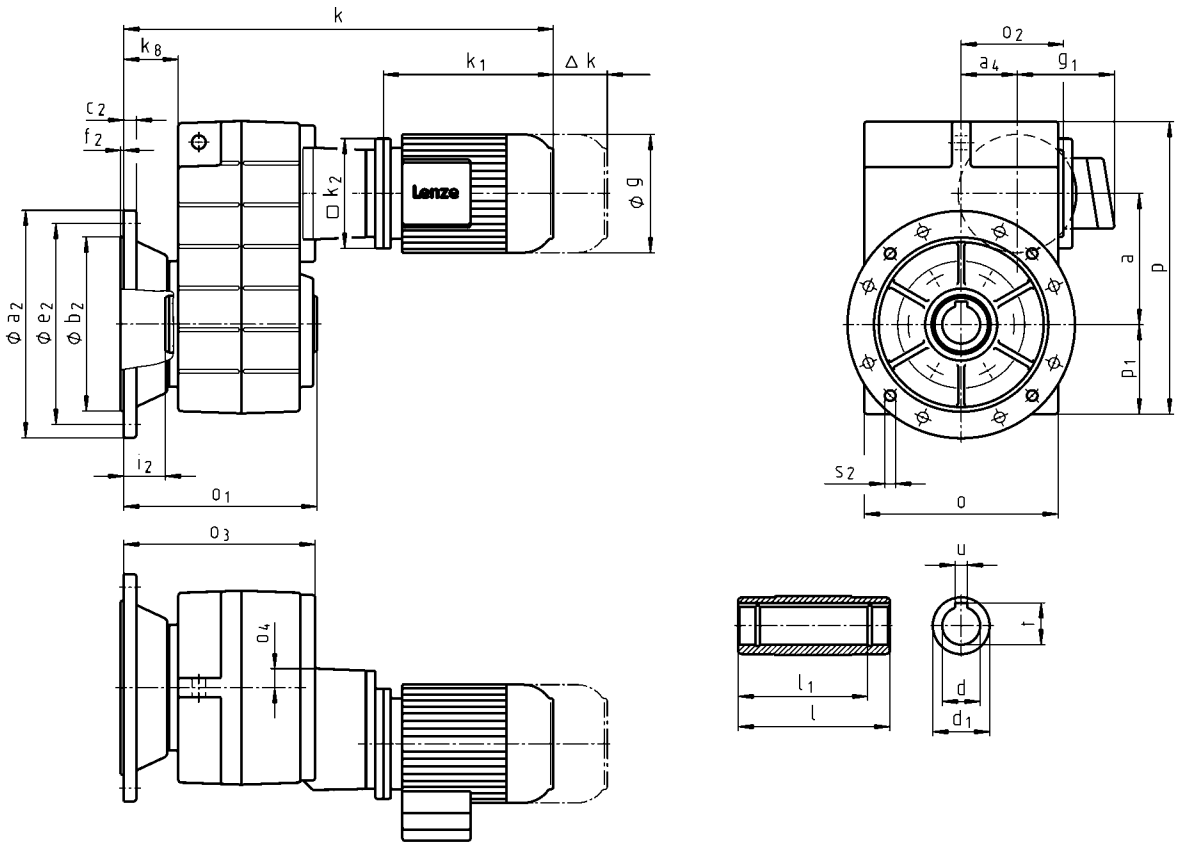

		063C11 063C12 063C31 063C32	063C42	071C11 071C13 071C31 071C32 071C33 071C42	080C11 080C13 080C31	080C32 080C33 080C42	090C11 090C31	090C32	100C12 100C31
g		123		139	156		176		194
g_1	MDEMAXX	100		109	141		146		157
	MDEMABR	107		118	132		137		147
k_1	MDEMAXX	187		207	224.5		274	248	309
k_2		120			145		180		
Δ k	MDEMABR	40		52	73		68		76
	MDFMAXX	128							109
	MDFMABR	170		165	183		181		170
		k							
GFL05		443		463	485				
GFL06		481		501	523		583		
GFL07			539	559	581		641	615	676
GFL09			596	616	638		698	672	733
GFL11					698		758	732	793
GFL14							837	811	872

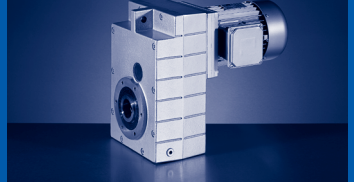

		100C32	100C41	112C22 112C31	112C32	112C41	132C21 132C22 132C32	160C22	160C32
g		194		218			258	310	
g_1	MDEMAXX	157		167			195	210	
	MDEMABR	147		158			187	210	
k_1	MDEMAXX	309		319	363		403	457.5	501.5
k_2		180		222			265	300	
Δ k	MDEMABR	76		90			109.5	105	
	MDFMAXX	109		102			115	149	
	MDFMABR	170		183			201.5	179	
		k							
GFL07			676						
GFL09		733		749		793			
GFL11		793		809	853		901		
GFL14		872		888	932		980	1039	1083

	a	a_4	k_8	o[1]	o_2	o_3	o_4	p[1]	p_1
GFL05	112.5	54.5	46	165	106.5	173.5	22.6	252	78
GFL06	140	58	55.5	206	111	200.5	20.2	315	98
GFL07	173	74	72.5	256	135	254	24	386	118
GFL09	220	93.5	77.5	318	170	297.5	27	486	149
GFL11	276.5	120	85.5	395	216	344.5	33.5	600	181
GFL14	339	154	89.5	490	271	399.5	38	740	228

	d	d_1	l	l_1	u	t	i_2	o_1	a_2	b_2	c_2	e_2	f_2	s_2
	H7				JS9	+0,2				j7				
GFL05	30 35	50 50	140 140	124 124	8 10	33.3 38.3	33 33	173 173	200	130	12	165	4	4 x 11
GFL06	40 45	65 65	160 160	140 140	12 14	43.3 48.8	42 41	201 201	250	180	15	215	4	4 x 14
GFL07	50 55	75 75	200 200	175 175	14 16	53.8 59.3	55 55	255 255	250 300	180 230	15 17	215 265	4 4	4 x 14 4 x 14
GFL09	60 70	95 95	240 240	210 210	18 20	64.4 74.9	60 60	300 300	350	250	18	300	4	4 x 17.5
GFL11	70 80	105 105	290 290	250 250	20 22	74.9 85.4	60 60	350 350	400 450	300 350	20 22	350 400	5 5	4 x 17.5 8 x 17.5
GFL14	100	135	350	305	28	106.4	60	410	450	350	22	400	5	8 x 18.5

[1] k_2 !

GFL□□-3M V□R

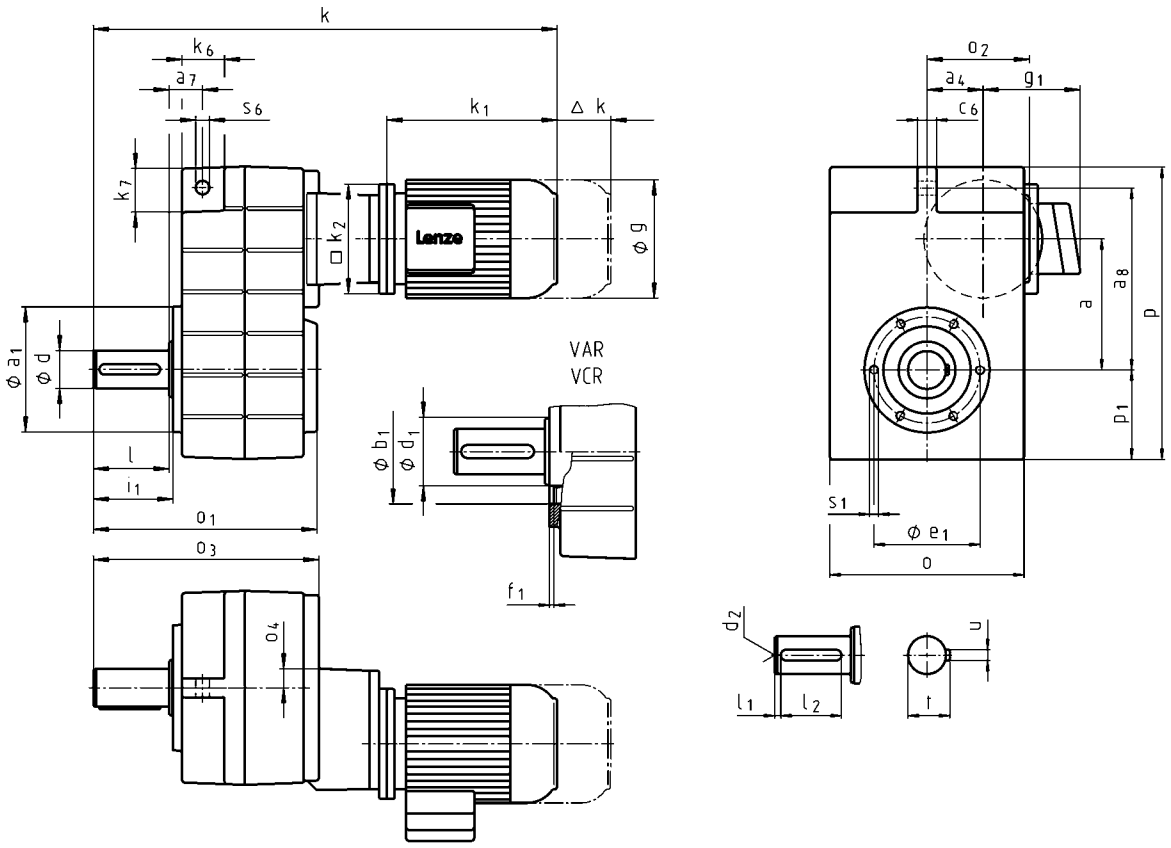

		063C11 063C12 063C31 063C32	063C42	071C11 071C13 071C31 071C32 071C33 071C42	080C11 080C13 080C31	080C32 080C33 080C42	090C11 090C31	090C32	100C12 100C31
g		123		139	156		176		194
g_1	MDEMAXX	100		109	141		146		157
	MDEMABR	107		118	132		137		147
k_1	MDEMAXX	187		207	224.5		274	248	309
k_2		120			145		180		
Δ k	MDEMABR	40		52	73		68		76
	MDFMAXX	128							109
	MDFMABR	170		165	183		181		170
		k							
GFL05		470		490	512				
GFL06		520		540	562		622		
GFL07			584	604	626		686	660	721
GFL09			656	676	698		758	732	793
GFL11					798		858	832	893
GFL14							977	951	1012

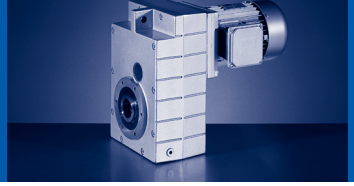

		100C32	100C41	112C22 112C31	112C32	112C41	132C21 132C22 132C32	160C22	160C32
g		194		218			258	310	
g_1	MDEMAXX	157		167			195	210	
	MDEMABR	147		158			187	210	
k_1	MDEMAXX	309		319	363		403	457.5	501.5
k_2		180		222			265	300	
Δ k	MDEMABR	76		90			109.5	105	
	MDFMAXX	109		102			115	149	
	MDFMABR	170		183			201.5	179	
		k							
GFL07			721						
GFL09		793		809		853			
GFL11		893		909	953		1001		
GFL14		1012		1028	1072		1120	1179	1223

	a	a_4	a_7	a_8	c_6	k_6	k_7	o[1)]	o_2	o_3	o_4	p[1)]	p_1	s_6
GFL05	112.5	54.5	29	155	16	35	38	165	106.5	200.5	22.6	252	78	14
GFL06	140	58	35	195	20	46	46	206	111	239.5	20.2	315	98	14
GFL07	173	74	44	240	25	56	56	256	135	299	24	386	118	18
GFL09	220	93.5	50	300	32	70	70	318	170	357.5	27	486	149	22
GFL11	276.5	120	65	375	40	84	90	395	216	444.5	33.5	600	181	26
GFL14	339	154	80	455	50	100	114	490	271	539.5	38	740	228	32

	d	d	d_1	d_2	l	l_1	l_2	u	t	o_1	a_1	b_1	e_1	f_1	s_1
	k6	m6										H7			
GFL05	30		45	M10	60	6	45	8	33	196.5	118	80	100	4	M8x14
GFL06	40		65	M16	80	7	63	12	43	235.5	140	100	120	4	M10x16
GFL07	50		75	M16	100	8	80	14	53.5	295.5	165	115	140	5	M12x18
GFL09		60	95	M20	120	8	100	18	64	355.5	205	145	175	6	M16x24
GFL11		80	105	M20	160	15	125	22	85	444.5	240	140	205	6	M20x32
GFL14		100	135	M24	200	18	160	28	106	543.5	290	170	250	6	M24x35

[1)] k_2 !

GFL□□-3M VCK

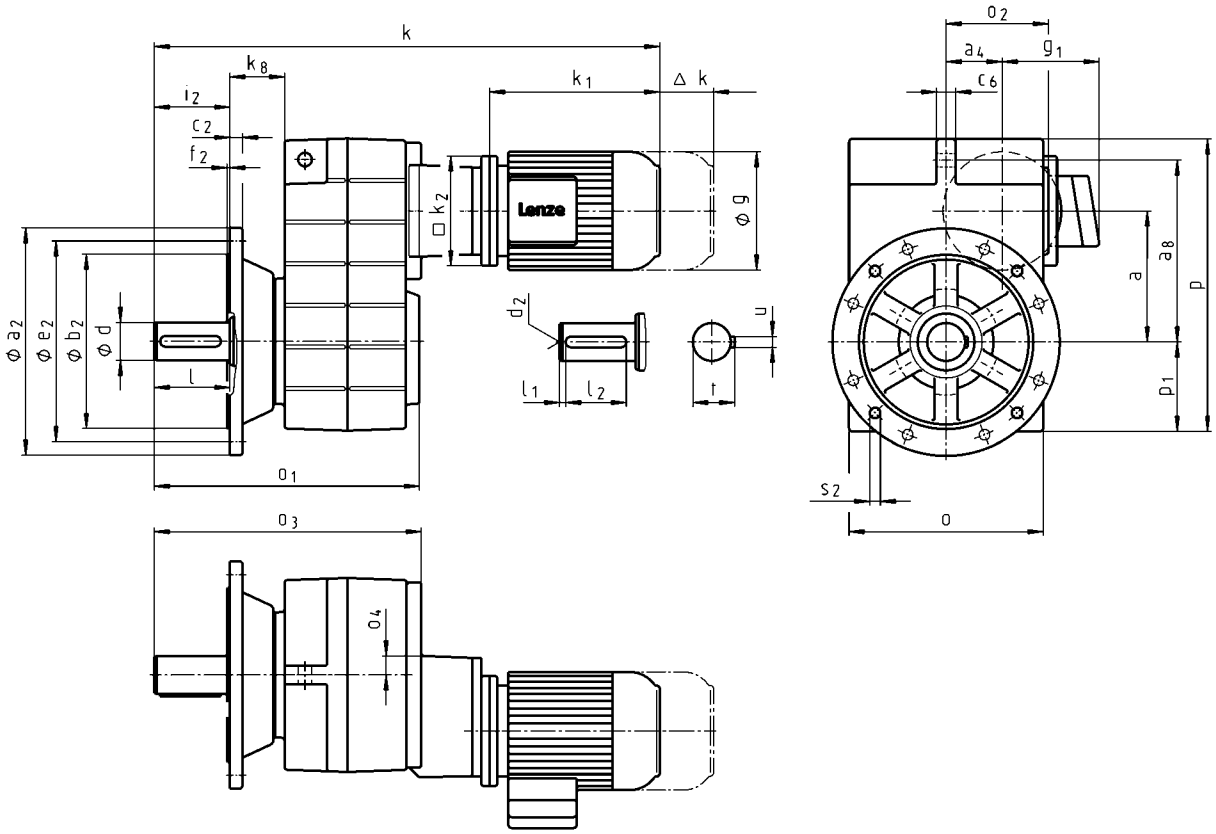

		063C11 063C12 063C31 063C32	063C42	071C11 071C13 071C31 071C32 071C33 071C42	080C11 080C13 080C31	080C32 080C33 080C42	090C11 090C31	090C32	100C12 100C31
g		123		139	156		176		194
g_1	MDEMAXX	100		109	141		146		157
	MDEMABR	107		118	132		137		147
k_1	MDEMAXX	187		207	224.5		274	248	309
k_2		120			145		180		
Δ k	MDEMABR	40		52	73		68		76
	MDFMAXX	128							109
	MDFMABR	170		165	183		181		170
		k							
GFL05		503		523	545				
GFL06		561		581	603		663		
GFL07			639	659	681		741	715	776
GFL09			716	736	758		818	792	853
GFL11					858		918	892	953
GFL14							1037	1011	1072

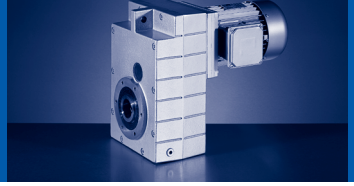

		100C32	100C41	112C22 112C31	112C32	112C41	132C21 132C22 132C32	160C22	160C32
g		194		218			258	310	
g_1	MDEMAXX	157		167			195	210	
	MDEMABR	147		158			187	210	
k_1	MDEMAXX	309		319	363		403	457.5	501.5
k_2		180		222			265	300	
Δ k	MDEMABR	76		90			109.5	105	
	MDFMAXX	109		102			115	149	
	MDFMABR	170		183			201.5	179	
		k							
GFL07			776						
GFL09		853		869		913			
GFL11		953		969	1013		1061		
GFL14		1072		1088	1132		1180	1239	1283

	a	a_4	k_8	o[1)]	o_2	o_3	o_4	p[1)]	p_1
GFL05	112.5	54.5	46	165	106.5	233.5	22.6	252	78
GFL06	140	58	55.5	206	111	280.5	20.2	315	98
GFL07	173	74	72.5	256	135	354	24	386	118
GFL09	220	93.5	77.5	318	170	417.5	27	486	149
GFL11	276.5	120	85.5	395	216	504.5	33.5	600	181
GFL14	339	154	89.5	490	271	599.5	38	740	228

	d	d	d_1	d_2	l	l_1	l_2	u	t	i_2	o_1	a_2	b_2	c_2	e_2	f_2	s_2
	k6	m6											j7				
GFL05	30		45	M10	60	6	45	8	33	60	229.5	200	130	12	165	4	4 x 11
GFL06	40		65	M16	80	7	63	12	43	80	276.5	250	180	15	215	4	4 x 14
GFL07	50		75	M16	100	8	80	14	53.5	100	350.5	250 300	180 230	15 17	215 265	4 4	4 x 14 4 x 14
GFL09		60	95	M20	120	8	100	18	64	120	415.5	350	250	18	300	4	4 x 17.5
GFL11		80	105	M20	160	15	125	22	85	160	504.5	400 450	300 350	20 22	350 400	5 5	4 x 17.5 8 x 17.5
GFL14		100	135	M24	200	18	160	28	106	200	603.5	450	350	22	400	5	8 x 18.5

[1)] k_2 !

GFL□□-2M H□R

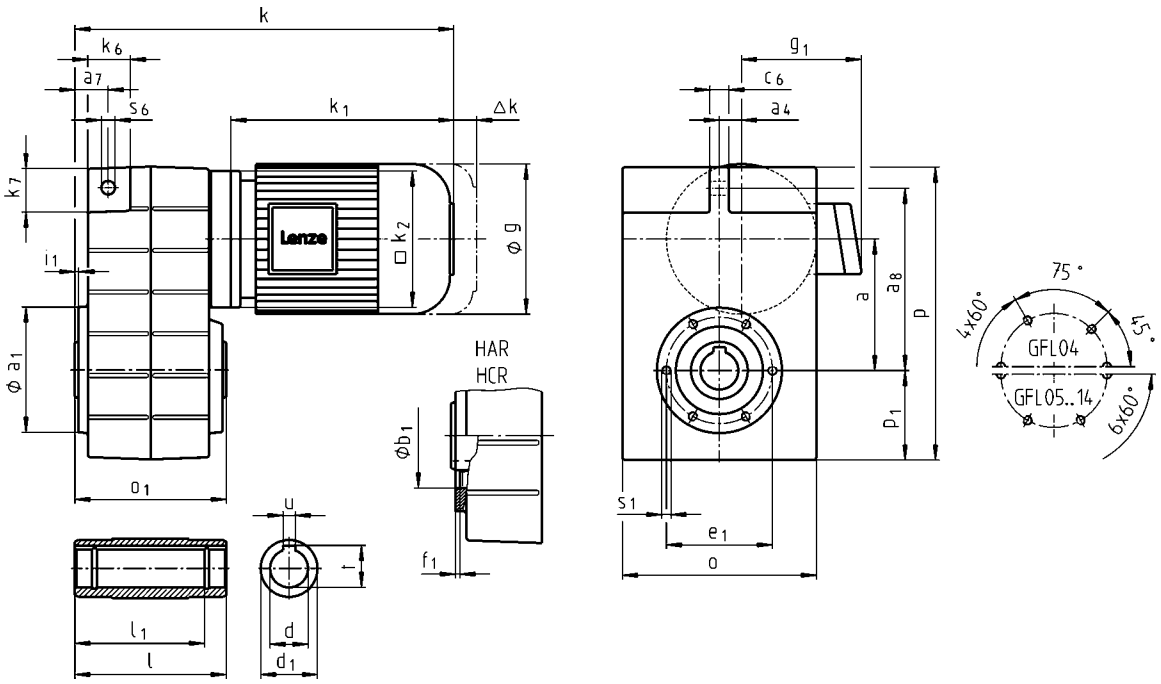

		080C32	090C12 090C32	100C12	100C32	112C22
g		156	176	194		218
g_1	MHEMAXX	141	146	157		167
	MHEMABR	132	137	147		158
k_1	MHEMAXX	224.5	274	309	324	363
k_2		145	180			222
Δ k	MHEMABR	73	68	76		90
	MHFMAXX	128		109		102
	MHFMABR	183	181	170		183
		k				
	GFL04	354				
	GFL05	376	435	470	485	
	GFL06	389	448	483	498	543
	GFL07	422	481	516	531	576
	GFL09		515	550	565	610
	GFL11			591	606	651
	GFL14					696

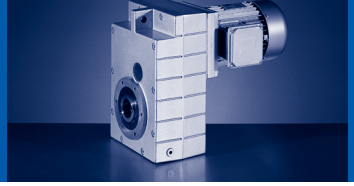

		132C12 132C22	160C22	160C32	180C12 180C32	180C42	225C12 225C22
g		258	310		348		447
g_1	MHEMAXX	195	210		230		346
	MHEMABR	187	210		230		346
k_1	MHEMAXX	403	457.5	501.5	561	618	848
k_2		265	300				
Δ k	MHEMABR	109.5	105		113		
	MHFMAXX	115	149			155	213
	MHFMABR	201.5	179		215		213
		k					
GFL06		591					
GFL07		624	684	728			
GFL09		658	718	762	821	878	
GFL11		699	759	803	862	919	1149
GFL14		744	804	848	907	964	1194

	a	a_4	a_7	a_8	c_6	k_6	k_7	o[1)]	p[1)]	p_1	s_6
GFL04	90.5	12.5	22.5	128	14	32	35	148	214	69	12.5
GFL05	112.5	18.5	29	155	16	35	38	165	252	78	14
GFL06	140	22	35	195	20	46	46	206	315	98	14
GFL07	173	29	44	240	25	56	56	256	386	118	18
GFL09	220	37.5	50	300	32	70	70	318	486	149	22
GFL11	276.5	50	65	375	40	84	90	395	600	181	26
GFL14	339	65	80	455	50	100	114	490	740	228	32

	d[2)]	d_1	l	l_1	u	t	i_1	o_1	a_1	b_1	e_1	f_1	s_1
	H7				JS9	+0,2				H7			
GFL04	25 30	45 45	115 115	100 100	8 8	28.3 33.3	2.5 2.5	115 115	110	75	90	3	M6x12
GFL05	30 35	50 50	140 140	124 124	8 10	33.3 38.3	4 4	140 140	118	80	100	4	M8x14
GFL06	40 45	65 65	160 160	140 140	12 14	43.3 48.8	5 5	160 160	140	100	120	4	M10x16
GFL07	50 55	75 75	200 200	175 175	14 16	53.8 59.3	5 5	200 200	165	115	140	5	M12x18
GFL09	60 70	95 95	240 240	210 210	18 20	64.4 74.9	5 5	240 240	205	145	175	6	M16x24
GFL11	70 80	105 105	290 290	250 250	20 22	74.9 85.4	6 6	290 290	240	140	205	6	M20x32
GFL14	100	135	350	305	28	106.4	7	350	290	170	250	6	M24x35

[1)] k_2 !
[2)] Not suitable for through machine shaft at motor end:
GFL04-2M H□□ 080C□□; d=30
GFL05-2M H□□ 100C□□; d=35
GFL07-2M H□□ 160C□□; d=50/55
GFL11-2M H□□ 225C□□; d=80

GFL□□-2M HCK

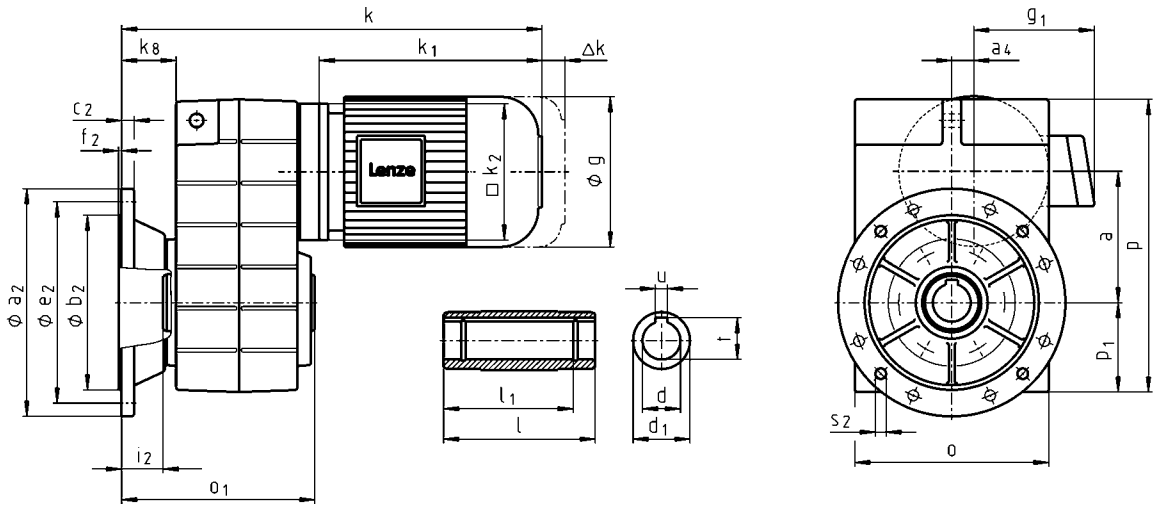

		080C32	090C12 090C32	100C12	100C32	112C22
g		156	176	194		218
g_1	MHEMAXX	141	146	157		167
	MHEMABR	132	137	147		158
k_1	MHEMAXX	224.5	274	309	324	363
k_2		145	180			222
Δ k	MHEMABR	73	68	76		90
	MHFMAXX	128		109		102
	MHFMABR	183	181	170		183
		k				
	GFL04	387				
	GFL05	409	468	503	518	
	GFL06	430	489	524	539	584
	GFL07	477	536	571	586	631
	GFL09		575	610	625	670
	GFL11			651	666	711
	GFL14					756

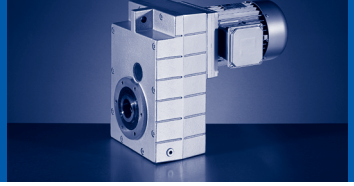

		132C12 132C22	160C22	160C32	180C12 180C32	180C42	225C12 225C22
g		258	310		348		447
g_1	MHEMAXX	195	210		230		346
	MHEMABR	187	210		230		346
k_1	MHEMAXX	403	457.5	501.5	561	618	848
k_2		265	300				
Δ k	MHEMABR	109.5	105		113		
	MHFMAXX	115	149			155	213
	MHFMABR	201.5	179		215		213
		k					
GFL06		632					
GFL07		679	739	783			
GFL09		718	778	822	881	938	
GFL11		759	819	863	922	979	1209
GFL14		804	864	908	967	1024	1254

	a	a_4	k_8	o[1]	p[1]	p_1
GFL04	90.5	12.5	41.8	148	214	69
GFL05	112.5	18.5	46	165	252	78
GFL06	140	22	55.5	206	315	98
GFL07	173	29	72.5	256	386	118
GFL09	220	37.5	77.5	318	486	149
GFL11	276.5	50	85.5	395	600	181
GFL14	339	65	89.5	490	740	228

	d[2]	d_1	l	l_1	u	t	i_2	o_1	a_2	b_2	c_2	e_2	f_2	s_2
	H7				JS9	+0,2				j7				
GFL04	25 30	45 45	115 115	100 100	8 8	28.3 33.3	33 33	148 148	160	110	10	130	3.5	4 x 9
GFL05	30 35	50 50	140 140	124 124	8 10	33.3 38.3	33 33	173 173	200	130	12	165	4	4 x 11
GFL06	40 45	65 65	160 160	140 140	12 14	43.3 48.8	42 41	201 201	250	180	15	215	4	4 x 14
GFL07	50 55	75 75	200 200	175 175	14 16	53.8 59.3	55 55	255 255	250 300	180 230	15 17	215 265	4 4	4 x 14 4 x 14
GFL09	60 70	95 95	240 240	210 210	18 20	64.4 74.9	60 60	300 300	350	250	18	300	4	4 x 17.5
GFL11	70 80	105 105	290 290	250 250	20 22	74.9 85.4	60 60	350 350	400 450	300 350	20 22	350 400	5 5	4 x 17.5 8 x 17.5
GFL14	100	135	350	305	28	106.4	60	410	450	350	22	400	5	8 x 18.5

[1] k_2 !
[2] Not suitable for through machine shaft at motor end:
GFL04-2M H□□ 080C□□; d=30
GFL05-2M H□□ 100C□□; d=35
GFL07-2M H□□ 160C□□; d=50/55
GFL11-2M H□□ 225C□□; d=80

GFL□□-2M V□R

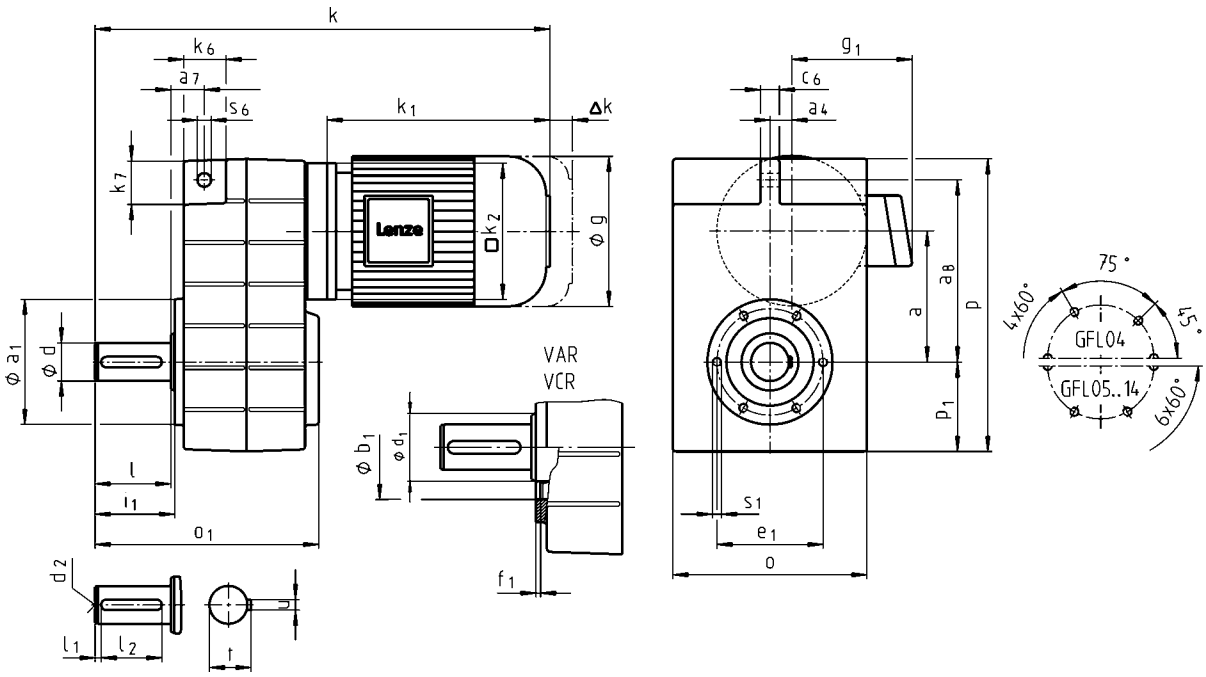

		080C32	090C12 090C32	100C12	100C32	112C22
g		156	176	194		218
g_1	MHEMAXX	141	146	157		167
	MHEMABR	132	137	147		158
k_1	MHEMAXX	224.5	274	309	324	363
k_2		145	180			222
Δ k	MHEMABR	73	68	76		90
	MHFMAXX	128		109		102
	MHFMABR	183	181	170		183
		k				
	GFL04	404	464			
	GFL05	436	495	530	545	
	GFL06	469	528	563	578	623
	GFL07	522	581	616	631	676
	GFL09		635	670	685	730
	GFL11			751	766	811
	GFL14					896

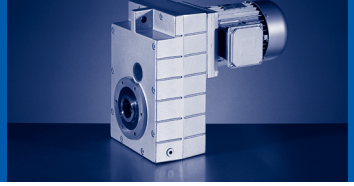

		132C12 132C22	160C22	160C32	180C12 180C32	180C42	225C12 225C22
g		258	310		348		447
g_1	MHEMAXX	195	210		230		346
	MHEMABR	187	210		230		346
k_1	MHEMAXX	403	457.5	501.5	561	618	848
k_2		265	300				
Δ k	MHEMABR	109.5	105		113		
	MHFMAXX	115	149			155	213
	MHFMABR	201.5	179		215		213
		k					
GFL06		671					
GFL07		724	784	828			
GFL09		778	838	882	941	998	
GFL11		859	919	963	1022	1079	1309
GFL14		944	1004	1048	1107	1164	1394

	a	a_4	a_7	a_8	c_6	k_6	k_7	o[1)]	p[1)]	p_1	s_6
GFL04	90.5	12.5	22.5	128	14	32	35	148	214	69	12.5
GFL05	112.5	18.5	29	155	16	35	38	165	252	78	14
GFL06	140	22	35	195	20	46	46	206	315	98	14
GFL07	173	29	44	240	25	56	56	256	386	118	18
GFL09	220	37.5	50	300	32	70	70	318	486	149	22
GFL11	276.5	50	65	375	40	84	90	395	600	181	26
GFL14	339	65	80	455	50	100	114	490	740	228	32

	d	d	d_1	d_2	l	l_1	l_2	u	t	o_1	a_1	b_1	e_1	f_1	s_1
	k6	m6										H7			
GFL04	25		45	M10	50	6	40	8	28	162.5	110	75	90	3	M6x12
GFL05	30		45	M10	60	6	45	8	33	196.5	118	80	100	4	M8x14
GFL06	40		65	M16	80	7	63	12	43	235.5	140	100	120	4	M10x16
GFL07	50		75	M16	100	8	80	14	53.5	295.5	165	115	140	5	M12x18
GFL09		60	95	M20	120	8	100	18	64	355.5	205	145	175	6	M16x24
GFL11		80	105	M20	160	15	125	22	85	444.5	240	140	205	6	M20x32
GFL14		100	135	M24	200	18	160	28	106	543.5	290	170	250	6	M24x35

[1)] k_2 !

GFL□□-2M VCK

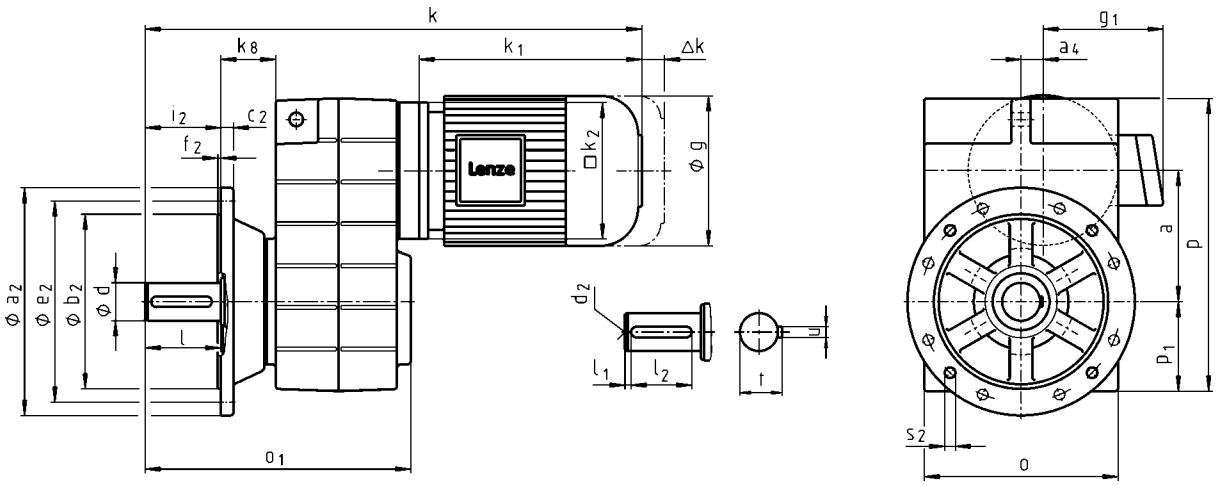

		080C32	090C12 090C32	100C12	100C32	112C22
g		156	176	194		218
g_1	MHEMAXX	141	146	157		167
	MHEMABR	132	137	147		158
k_1	MHEMAXX	224.5	274	309	324	363
k_2		145	180			222
Δ k	MHEMABR	73	68	76		90
	MHFMAXX	128		109		102
	MHFMABR	183	181	170		183
		k				
GFL04		437	497			
GFL05		469	528	563	578	
GFL06		510	569	604	619	664
GFL07		577	636	671	686	731
GFL09			695	730	745	790
GFL11				811	826	871
GFL14						956

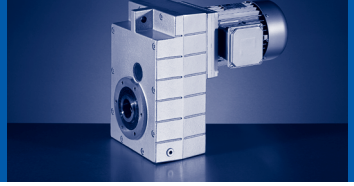

		132C12 132C22	160C22	160C32	180C12 180C32	180C42	225C12 225C22
g		258	310		348		447
g_1	MHEMAXX	195	210		230		346
	MHEMABR	187	210		230		346
k_1	MHEMAXX	403	457.5	501.5	561	618	848
k_2		265	300				
Δ k	MHEMABR	109.5	105		113		
	MHFMAXX	115	149			155	213
	MHFMABR	201.5	179		215		213
		k					
GFL06		712					
GFL07		779	839	883			
GFL09		838	898	942	1001	1058	
GFL11		919	979	1023	1082	1139	1369
GFL14		1004	1064	1108	1167	1224	1454

	a	a_4	k_8	o[1)]	p[1)]	p_1
GFL04	90.5	12.5	41.8	148	214	69
GFL05	112.5	18.5	46	165	252	78
GFL06	140	22	55.5	206	315	98
GFL07	173	29	72.5	256	386	118
GFL09	220	37.5	77.5	318	486	149
GFL11	276.5	50	85.5	395	600	181
GFL14	339	65	89.5	490	740	228

	d	d	d_1	d_2	l	l_1	l_2	u	t	i_2	o_1	a_2	b_2	c_2	e_2	f_2	s_2
	k6	m6											j7				
GFL04	25		45	M10	50	6	40	8	28	50	195.5	160	110	10	130	3.5	4 x 9
GFL05	30		45	M10	60	6	45	8	33	60	229.5	200	130	12	165	4	4 x 11
GFL06	40		65	M16	80	7	63	12	43	80	276.5	250	180	15	215	4	4 x 14
GFL07	50		75	M16	100	8	80	14	53.5	100	350.5	250 300	180 230	15 17	215 265	4 4	4 x 14 4 x 14
GFL09		60	95	M20	120	8	100	18	64	120	415.5	350	250	18	300	4	4 x 17.5
GFL11		80	105	M20	160	15	125	22	85	160	504.5	400 450	300 350	20 22	350 400	5 5	4 x 17.5 8 x 17.5
GFL14		100	135	M24	200	18	160	28	106	200	603.5	450	350	22	400	5	8 x 18.5

[1)] k_2 !

GFL□□-3M H□R

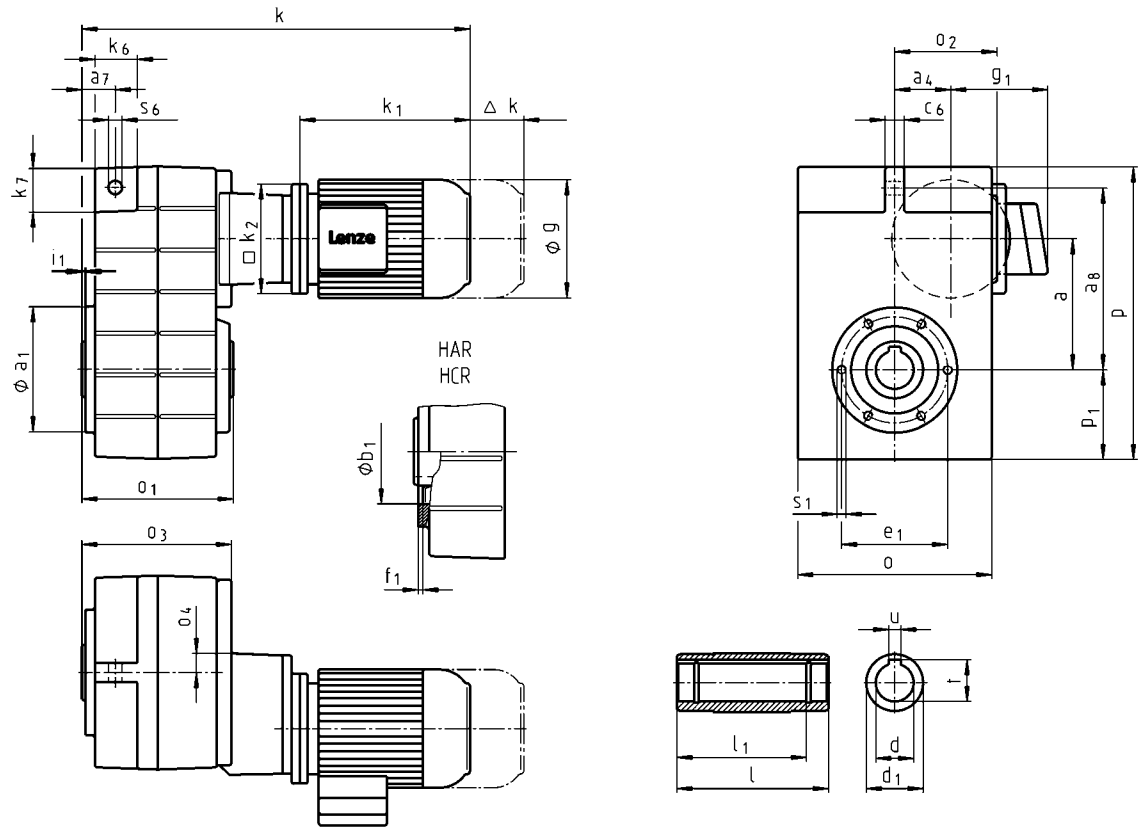

		080C32	090C12	090C32	100C12
g		156	176		194
g_1	MHEMAXX	141	146		157
	MHEMABR	132	137		147
k_1	MHEMAXX	224.5	274		309
k_2		145	180		
Δ k	MHEMABR	73	68		76
	MHFMAXX		128		109
	MHFMABR	183	181		170
			k		
	GFL06	482	542		
	GFL07	526	586		621
	GFL09	578	638		673
	GFL11	638	698		733
	GFL14		777		812

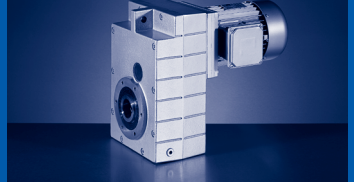

		100C32	112C22	132C12 132C22	160C22	160C32
g		194	218	258	310	
g_1	MHEMAXX	157	167	195	210	
	MHEMABR	147	158	187	210	
k_1	MHEMAXX	324	363	403	457.5	501.5
k_2		180	222	265	300	
Δ k	MHEMABR	76	90	109.5	105	
	MHFMAXX	109	102	115	149	
	MHFMABR	170	183	201.5	179	
				k		
GFL09		688	733			
GFL11		748	793	841		
GFL14		827	872	920	979	1023

	a	a_4	a_7	a_8	c_6	k_6	k_7	o[1)]	o_2	o_3	o_4	p[1)]	p_1	s_6
GFL06	140	58	35	195	20	46	46	206	111	159.5	20.2	315	98	14
GFL07	173	74	44	240	25	56	56	256	135	199	24	386	118	18
GFL09	220	93.5	50	300	32	70	70	318	170	237.5	27	486	149	22
GFL11	276.5	120	65	375	40	84	90	395	216	284.5	33.5	600	181	26
GFL14	339	154	80	455	50	100	114	490	271	339.5	38	740	228	32

	d	d_1	l	l_1	u	t	i_1	o_1	a_1	b_1	e_1	f_1	s_1
	H7				JS9	+0,2				H7			
GFL06	40 45	65 65	160 160	140 140	12 14	43.3 48.8	5 5	160 160	140	100	120	4	M10x16
GFL07	50 55	75 75	200 200	175 175	14 16	53.8 59.3	5 5	200 200	165	115	140	5	M12x18
GFL09	60 70	95 95	240 240	210 210	18 20	64.4 74.9	5 5	240 240	205	145	175	6	M16x24
GFL11	70 80	105 105	290 290	250 250	20 22	74.9 85.4	6 6	290 290	240	140	205	6	M20x32
GFL14	100	135	350	305	28	106.4	7	350	290	170	250	6	M24x35

[1)] k_2 !

GFL□□-3M HCK

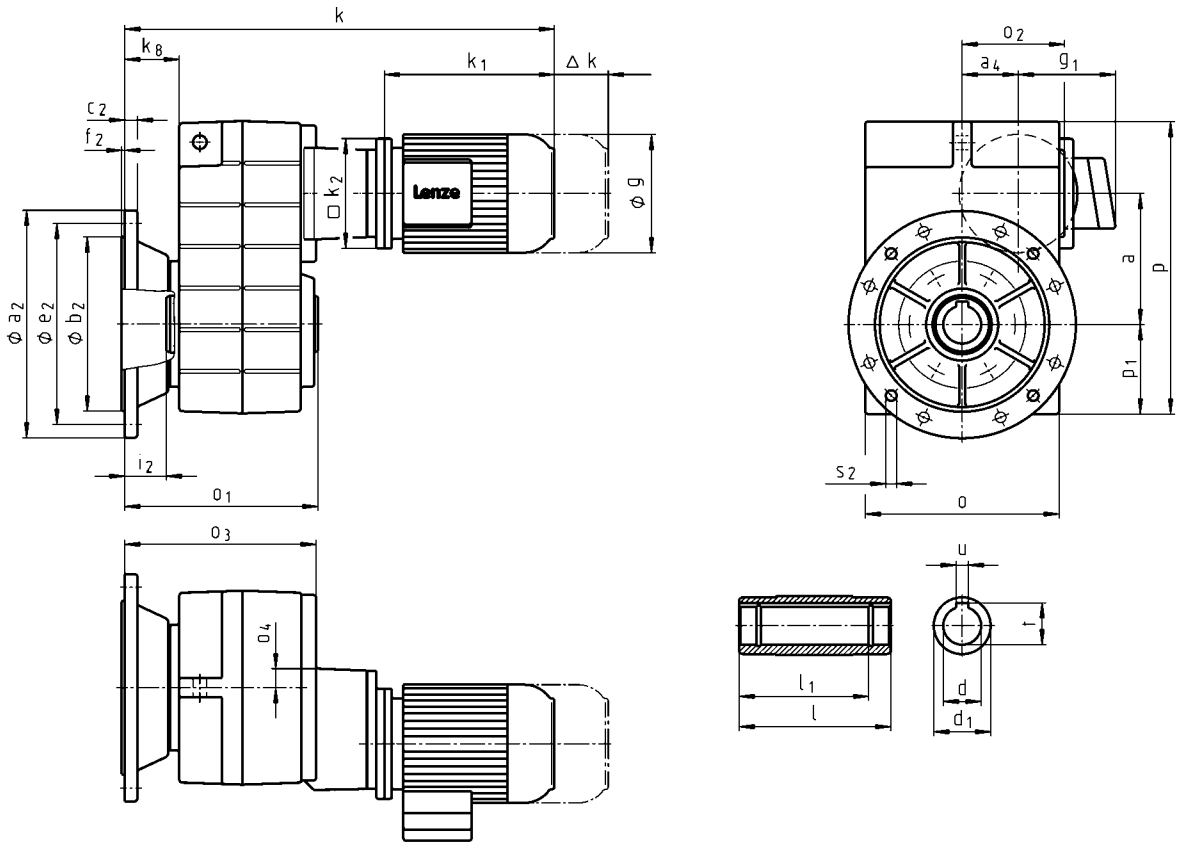

		080C32	090C12	090C32	100C12
g		156	176		194
g_1	MHEMAXX	141	146		157
	MHEMABR	132	137		147
k_1	MHEMAXX	224.5	274		309
k_2		145	180		
Δ k	MHEMABR	73	68		76
	MHFMAXX	128			109
	MHFMABR	183	181		170
		k			
GFL06		523	583		
GFL07		581	641		676
GFL09		638	698		733
GFL11		698	758		793
GFL14			837		872

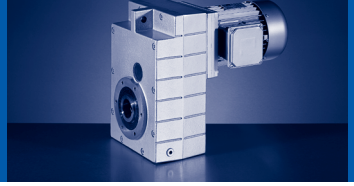

		100C32	112C22	132C12 132C22	160C22	160C32
g		194	218	258	310	
g_1	MHEMAXX	157	167	195	210	
	MHEMABR	147	158	187	210	
k_1	MHEMAXX	324	363	403	457.5	501.5
k_2		180	222	265	300	
Δ k	MHEMABR	76	90	109.5	105	
	MHFMAXX	109	102	115	149	
	MHFMABR	170	183	201.5	179	
				k		
GFL09		748	793			
GFL11		808	853	901		
GFL14		887	932	980	1039	1083

	a	a_4	k_8	o[1)]	o_2	o_3	o_4	p[1)]	p_1
GFL06	140	58	55.5	206	111	200.5	20.2	315	98
GFL07	173	74	72.5	256	135	254	24	386	118
GFL09	220	93.5	77.5	318	170	297.5	27	486	149
GFL11	276.5	120	85.5	395	216	344.5	33.5	600	181
GFL14	339	154	89.5	490	271	399.5	38	740	228

	d	d_1	l	l_1	u	t	i_2	o_1	a_2	b_2	c_2	e_2	f_2	s_2
	H7				JS9	+0,2				j7				
GFL06	40 45	65 65	160 160	140 140	12 14	43.3 48.8	42 41	201 201	250	180	15	215	4	4 x 14
GFL07	50 55	75 75	200 200	175 175	14 16	53.8 59.3	55 55	255 255	250 300	180 230	15 17	215 265	4 4	4 x 14 4 x 14
GFL09	60 70	95 95	240 240	210 210	18 20	64.4 74.9	60 60	300 300	350	250	18	300	4	4 x 17.5
GFL11	70 80	105 105	290 290	250 250	20 22	74.9 85.4	60 60	350 350	400 450	300 350	20 22	350 400	5 5	4 x 17.5 8 x 17.5
GFL14	100	135	350	305	28	106.4	60	410	450	350	22	400	5	8 x 18.5

[1)] k_2 !

GFL□□-3M V□R

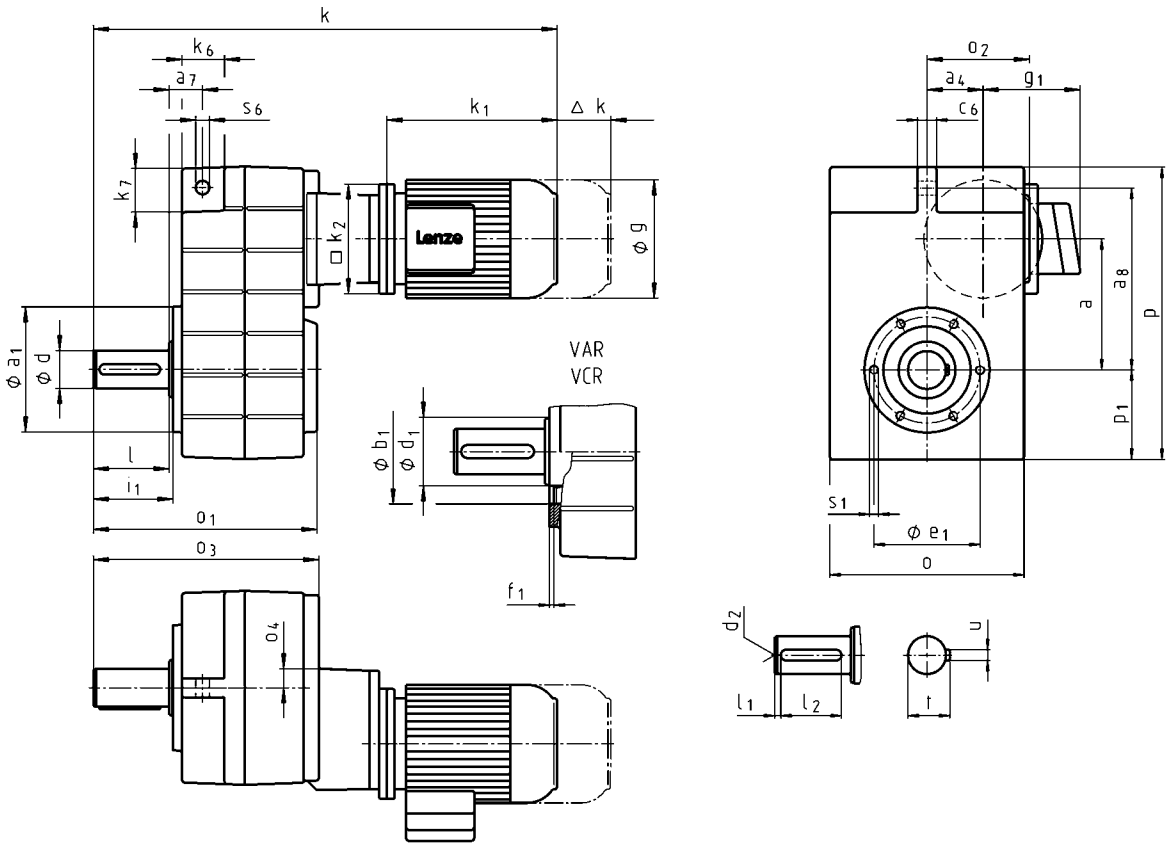

		080C32	090C12	090C32	100C12
g		156	176		194
g_1	MHEMAXX	141	146		157
	MHEMABR	132	137		147
k_1	MHEMAXX	224.5	274		309
k_2		145	180		
Δ k	MHEMABR	73	68		76
	MHFMAXX	128			109
	MHFMABR	183	181		170
		k			
GFL06		562	622		
GFL07		626	686		721
GFL09		698	758		793
GFL11		798	858		893
GFL14			977		1012

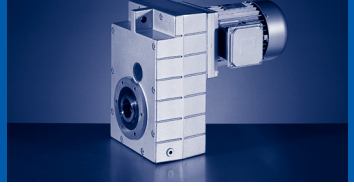

		100C32	112C22	132C12 132C22	160C22	160C32
g		194	218	258	310	
g_1	MHEMAXX	157	167	195	210	
	MHEMABR	147	158	187	210	
k_1	MHEMAXX	324	363	403	457.5	501.5
k_2		180	222	265	300	
Δ k	MHEMABR	76	90	109.5	105	
	MHFMAXX	109	102	115	149	
	MHFMABR	170	183	201.5	179	
				k		
GFL09		808	853			
GFL11		908	953	1001		
GFL14		1027	1072	1120	1179	1223

	a	a_4	a_7	a_8	c_6	k_6	k_7	o[1)]	o_2	o_3	o_4	p[1)]	p_1	s_6
GFL06	140	58	35	195	20	46	46	206	111	239.5	20.2	315	98	14
GFL07	173	74	44	240	25	56	56	256	135	299	24	386	118	18
GFL09	220	93.5	50	300	32	70	70	318	170	357.5	27	486	149	22
GFL11	276.5	120	65	375	40	84	90	395	216	444.5	33.5	600	181	26
GFL14	339	154	80	455	50	100	114	490	271	539.5	38	740	228	32

	d	d	d_1	d_2	l	l_1	l_2	u	t	o_1	a_1	b_1	e_1	f_1	s_1
	k6	m6										H7			
GFL06	40		65	M16	80	7	63	12	43	235.5	140	100	120	4	M10x16
GFL07	50		75	M16	100	8	80	14	53.5	295.5	165	115	140	5	M12x18
GFL09		60	95	M20	120	8	100	18	64	355.5	205	145	175	6	M16x24
GFL11		80	105	M20	160	15	125	22	85	444.5	240	140	205	6	M20x32
GFL14		100	135	M24	200	18	160	28	106	543.5	290	170	250	6	M24x35

[1)] k_2 !

GFL□□-3M VCK

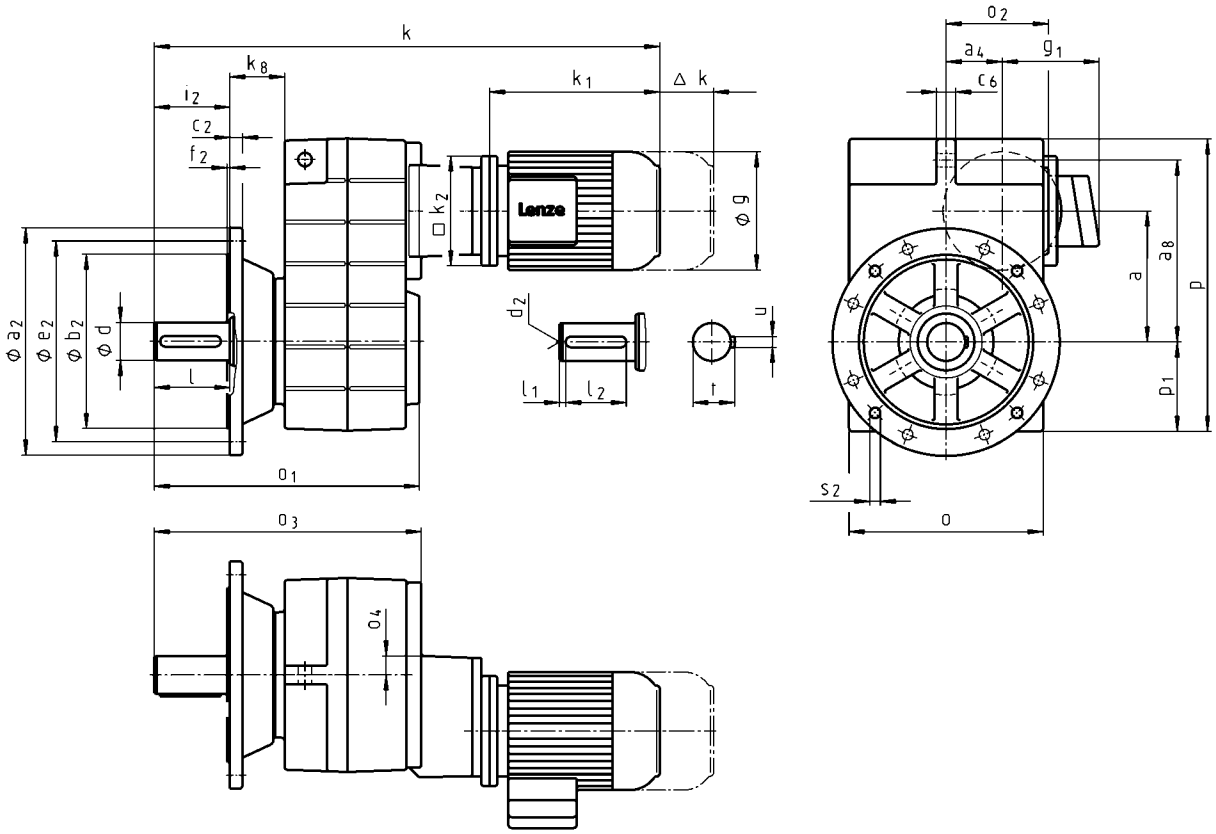

		080C32	090C12	090C32	100C12
g		156	176		194
g_1	MHEMAXX	141	146		157
	MHEMABR	132	137		147
k_1	MHEMAXX	224.5	274		309
k_2		145	180		
Δ k	MHEMABR	73	68		76
	MHFMAXX	128			109
	MHFMABR	183	181		170
		k			
GFL06		603	663		
GFL07		681	741		776
GFL09		758	818		853
GFL11		858	918		953
GFL14			1037		1072

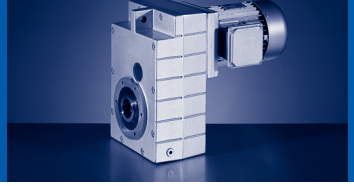

		100C32	112C22	132C12 132C22	160C22	160C32
g		194	218	258	310	
g_1	MHEMAXX	157	167	195	210	
	MHEMABR	147	158	187	210	
k_1	MHEMAXX	324	363	403	457.5	501.5
k_2		180	222	265	300	
Δ k	MHEMABR	76	90	109.5	105	
	MHFMAXX	109	102	115	149	
	MHFMABR	170	183	201.5	179	
				k		
GFL09		868	913			
GFL11		968	1013	1061		
GFL14		1087	1132	1180	1239	1283

	a	a_4	k_8	o[1)]	o_2	o_3	o_4	p[1)]	p_1
GFL06	140	58	55.5	206	111	280.5	20.2	315	98
GFL07	173	74	72.5	256	135	354	24	386	118
GFL09	220	93.5	77.5	318	170	417.5	27	486	149
GFL11	276.5	120	85.5	395	216	504.5	33.5	600	181
GFL14	339	154	89.5	490	271	599.5	38	740	228

	d	d	d_1	d_2	l	l_1	l_2	u	t	i_2	o_1	a_2	b_2	c_2	e_2	f_2	s_2
	k6	m6											j7				
GFL06	40		65	M16	80	7	63	12	43	80	276.5	250	180	15	215	4	4 x 14
GFL07	50		75	M16	100	8	80	14	53.5	100	350.5	250 300	180 230	15 17	215 265	4 4	4 x 14 4 x 14
GFL09		60	95	M20	120	8	100	18	64	120	415.5	350	250	18	300	4	4 x 17.5
GFL11		80	105	M20	160	15	125	22	85	160	504.5	400 450	300 350	20 22	350 400	5 5	4 x 17.5 8 x 17.5
GFL14		100	135	M24	200	18	160	28	106	200	603.5	450	350	22	400	5	8 x 18.5

[1)] k_2 !

Hollow shaft with shrink disc

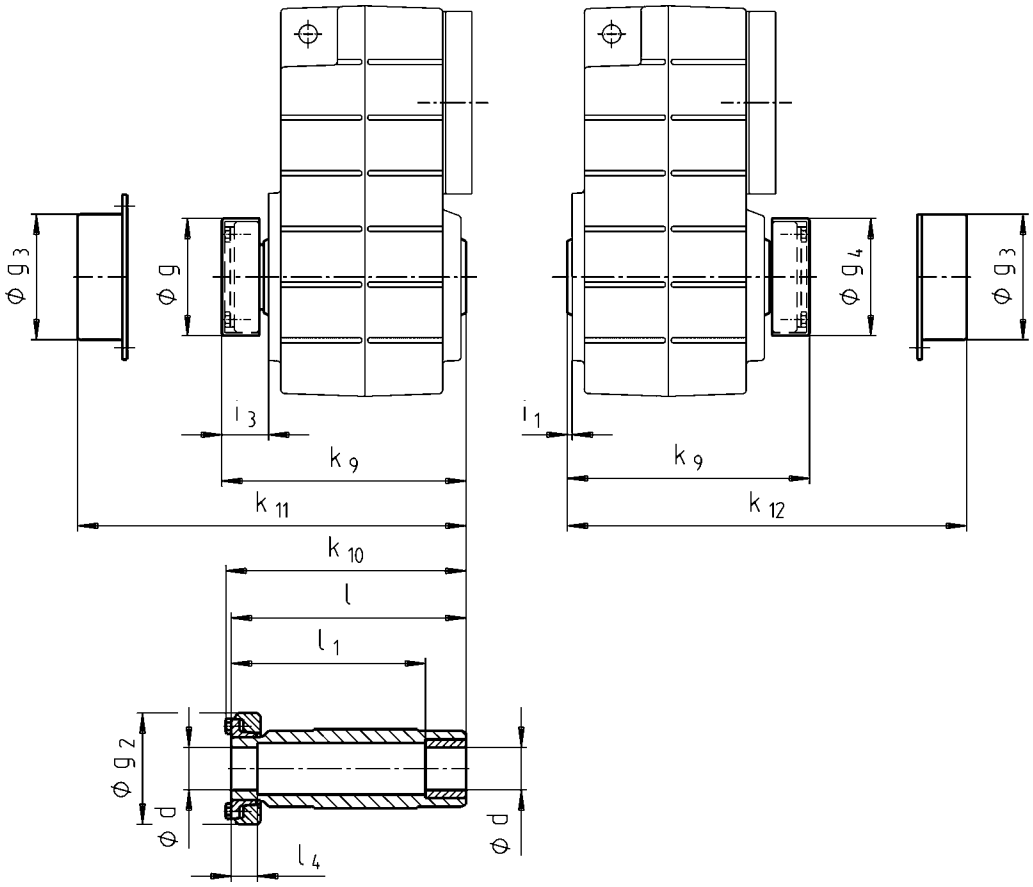

	d[1]	g_2	g_3	g_4	i_1	k_9	k_{10}	k_{11}	k_{12}	l	l_1	l_4
	h6											
GFL04	25 30	72	79	76	2.5	150	148	154	154	142	122	26
GFL04	25 30	72	79	76	2.5	150	148	154	154	142	122	26
GFL05	35	80	90	84	4.0	176	174	179	180	168	148	28
GFL06	40	90	100	94	5.0	202	200	204	205	194	164	30
GFL07	50	110	124	116	5.0	241	238	244	245	232	192	26
GFL09	65	141	159	147	5.0	288	285	287	288	278	228	30
GFL11	80	170	191	176	6.0	347	344	349	350	338	238	42
GFL14	100	215	253	221	7.0	418	415	421	422	407	307	55

[1] Machine shaft design.

- Output flange and hollow shaft with shrink disc (design S□K) is only possible with shrink disc in position 1.

- Not suitable for through machine shaft at motor end:
  GFL04-2M S□□ 080C□□; d=30
  GFL05-2M S□□ 100C□□; d=35
  GFL07-2M S□□ 160C□□; d=50/55
  GFL11-2M S□□ 225C□□; d=80

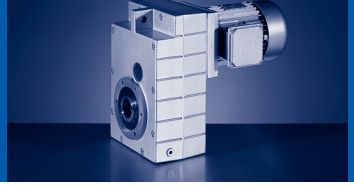

- Ensure that the strength of the machine shaft material is adequate in shrink disc designs.
  When using typical steels (e.g. C45, 42CrMo4), the torques listed in the selection tables can be used without restriction. Please consult us if you wish to use material that is considerably weaker. Medium surface roughness Rz must not exceed 15 µm (turning is sufficient).

Combination options with shrink disc in position 1 (drive end)

GFL□□-2M

Gearbox	Motor frame size
GFL04	
GFL05	063 [1)] 071 [1)]
GFL06	063 071 080 090 [1)] 100 [1)]
GFL07	080 090 100 112 [1)]
GFL09	090 100 112 132
GFL11	100 112 132 160 180 225
GFL14	112 132 160 180 225

[1)] Only possible without cover

- For geared motors GFL□□-2M/E S... with shrink disc position 1: terminal box position / motec position 4 not possible!

Foot mounting in position 3

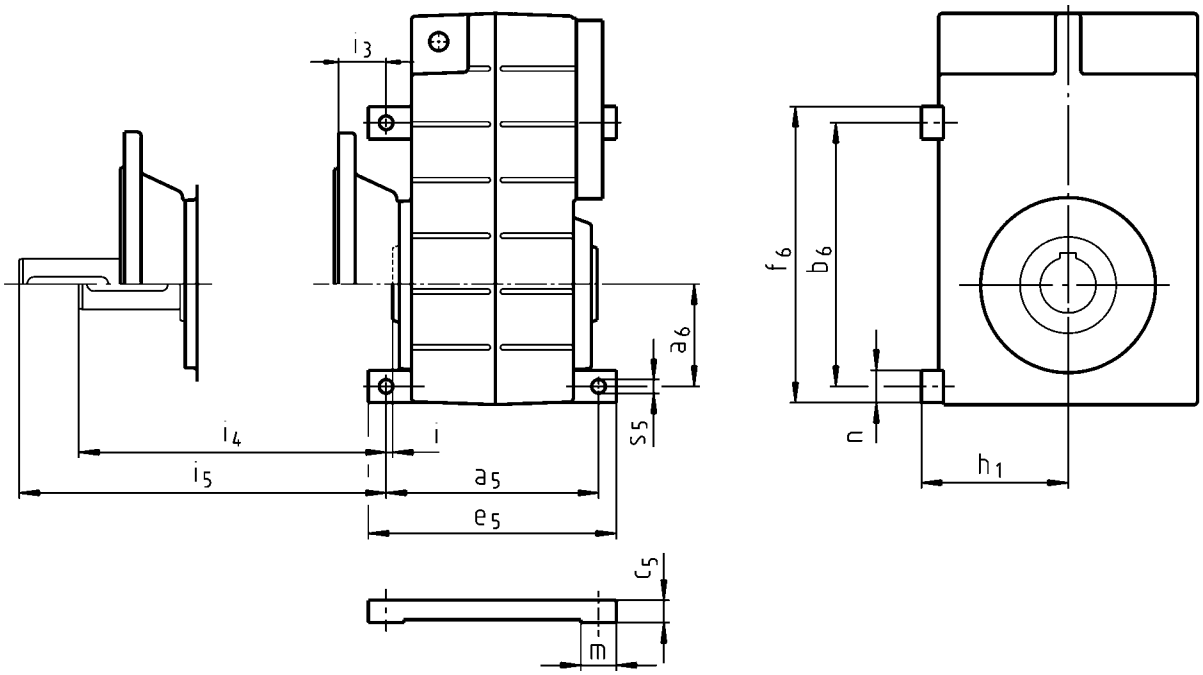

	a_5	a_6	b_6	c_5	e_5	f_6	h_1	i	i_3	i_4	i_5	m	n	s_5
GFL04	130	47	115	18	152	140	90	4.5	28.5	45.5	78.5	22	25	6.6
GFL05	160	65	167	21	185	192	100	2.0	31.0	58.0	91.0	25		9.0
GFL06	175	80	205	27	205	233	125		39.0	78.0	119	30	28	11.0
GFL07	220	100	260	31	255	292	155	3.0	52.0	97.0	152	35	32	13.5
GFL09	260	125	335	36	300	375	190		57.0	117	177	40	40	17.5
GFL11	315	155	435	48	365	485	240			157	217	50	50	22.0
GFL14	375	200	540	57	430	600	295			197	257	55	60	26.0

The following versions are not possible with feet:
- GFL04: Motor size 090
- GFL05: Motor size 090

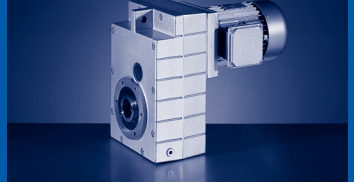

Foot mounting in position 4

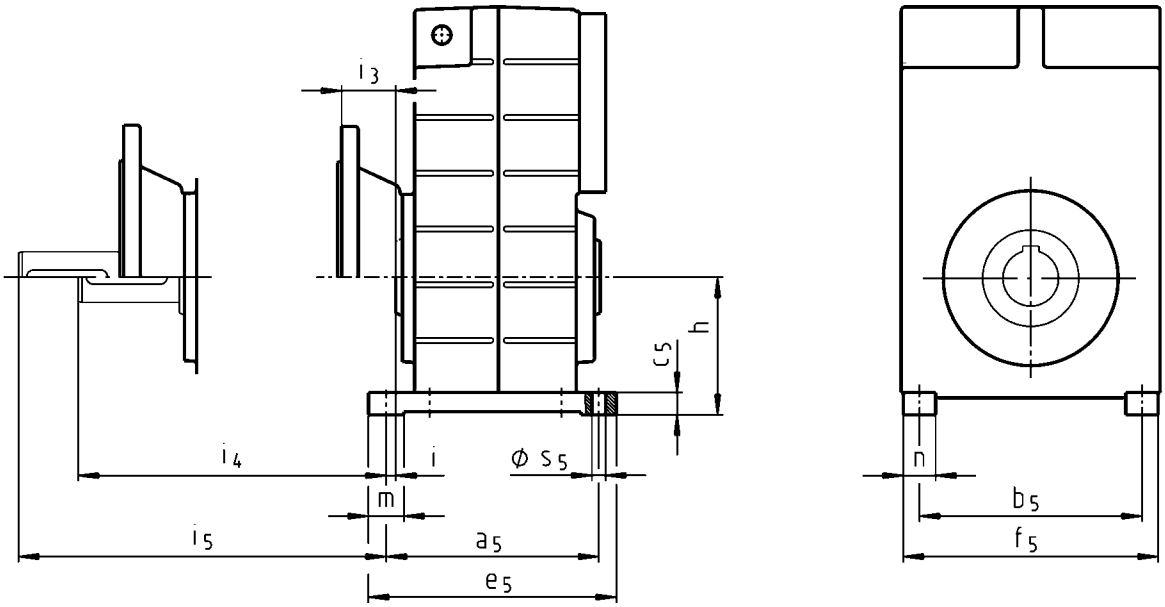

	a_5	b_5	c_5	e_5	f_5	h	i	i_3	i_4	i_5	m	n	s_5
GFL04	130	108	18	152	133.0	85	4.5	28.5	45.5	78.5	22	25	6.6
GFL05	160	140	21	185	165.0	95	2.0	31.0	58.0	91.0	25		9.0
GFL06	175	175	27	205	203.0	120		39.0	78.0	119	30	28	11.0
GFL07	220	220	31	255	252.0	145	3.0	52.0	97.0	152	35	32	13.5
GFL09	260	275	36	300	315.0	180		57.0	117	177	40	40	17.5
GFL11	315	340	48	365	390.0	224			157	217	50	50	22.0
GFL14	375	425	57	430	485.0	278			197	257	55	60	26.0

► In mounting positions E and F, the oil check bore hole/oil-sight glass are located between the feet in position 4!

Rubber buffer for torque plate

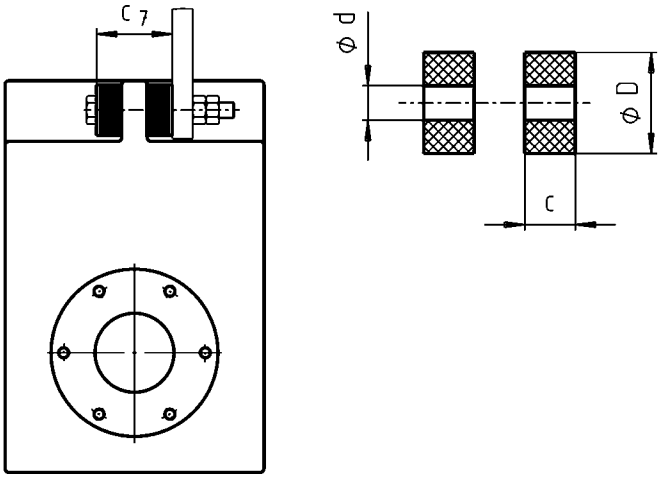

	d	D	c	c_7
GFL04	11	30	14.5	43
GFL05	11	30	14.5	45
GFL06	13	40	15.0	50
GFL07	17	50	27.0	79
GFL09	21	60	28.0	88
GFL11	26	72	29.0	98
GFL14	33	92	30.0	110

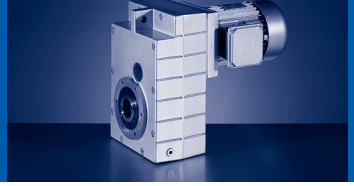

Mounting set for hollow shaft circlip - Proposed design for auxiliary tools

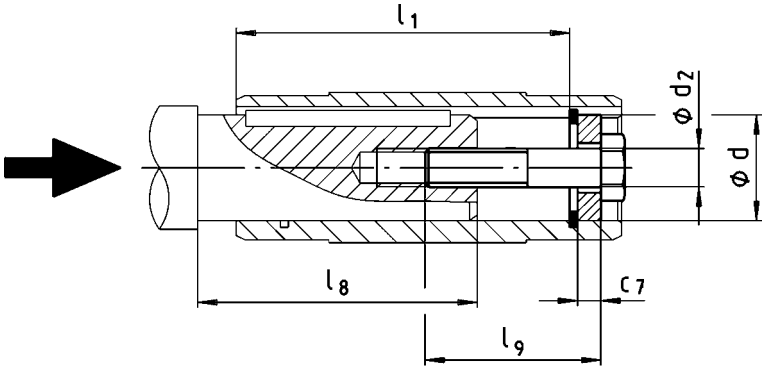

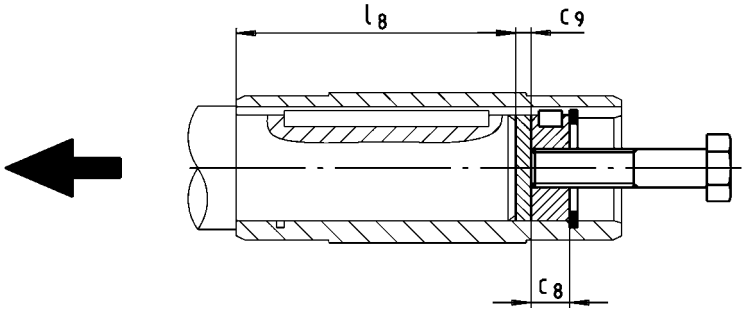

	d	l_1	d_2	l_9	c_7	c_8	c_9	$l_{8, max}$
	H7							
GFL04	25 30	100	M10	40	5	10	3	85
					6			
GFL05	30 35	124						107
			M12	50	7	12		
GFL06	40 45	140	M16	60	8	16	4	118
					9			
GFL07	50 55	175			10		5	148
			M20	80	11	20		
GFL09	60 70	210			13			182
					14			
GFL11	70 80	250					6	221
					16			
GFL14	100	305	M24	100	20	24	8	270

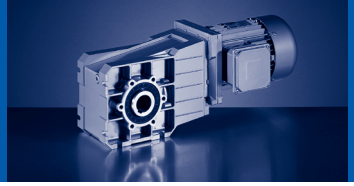

Permissible radial and axial forces at output

Permissible radial force
$F_{rad,per} = \min(f_w \times f_\alpha \times F_{rad,max}\ ;\ f_w \times F_{rad,max}$ at $n_2 \leq 16$ r/min)

Permissible axial force
$F_{ax,per} = F_{ax,max}$ if $F_{rad} = 0$

If F_{rad} **and** $F_{ax} \neq 0$; please contact Lenze.

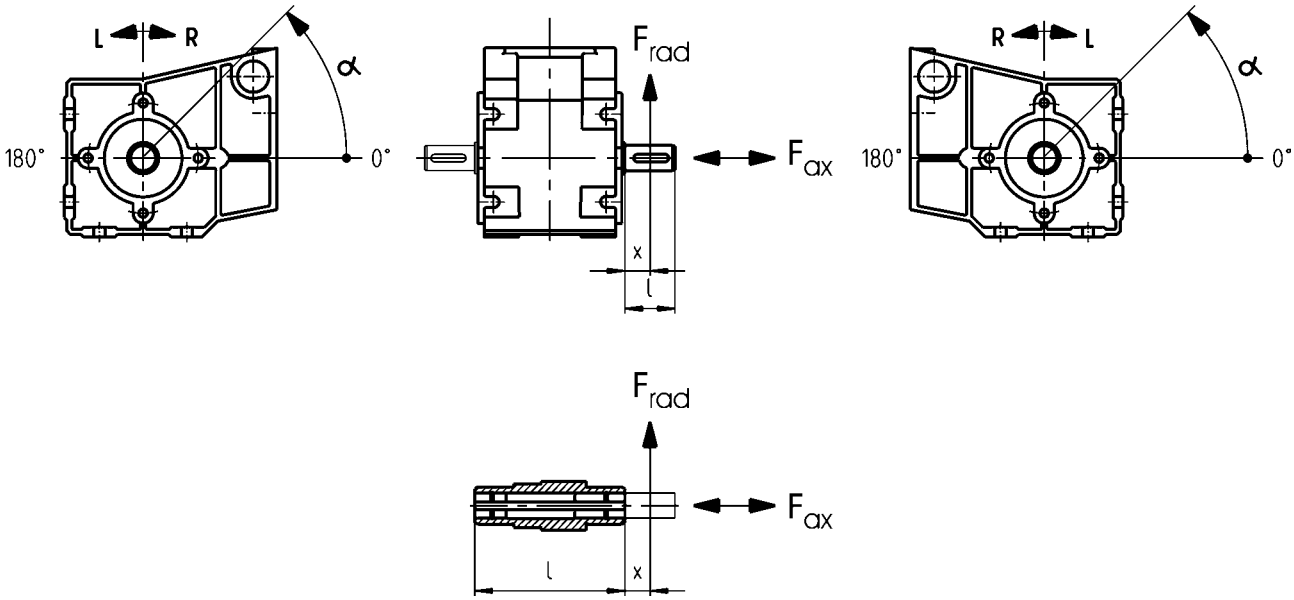

Effective direction factor f_α at output shaft

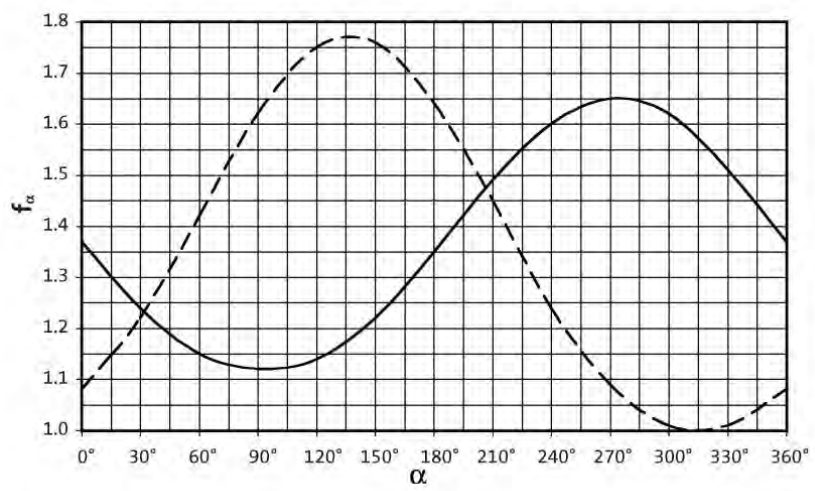

——— Direction of rotation L
— — — Direction of rotation R

Additional load factor f_w at output shaft

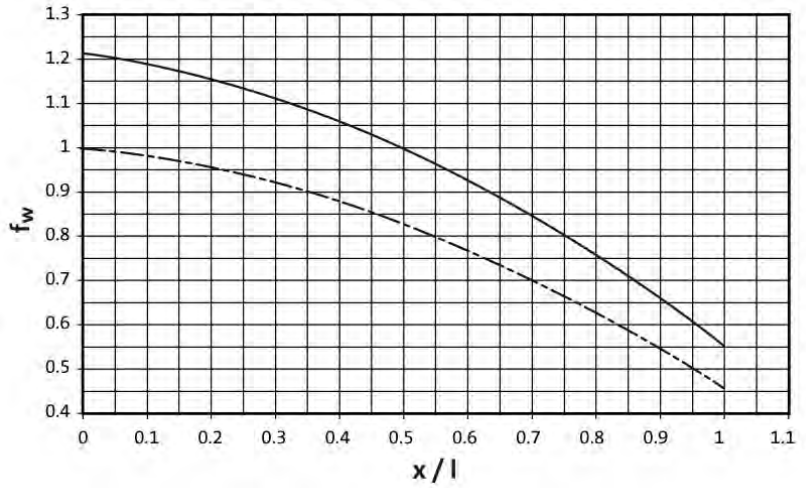

——— Solid shaft (V□□) — · — Hollow shaft (H□□)

GKR□□-2□ H□□

Size	n_2 [r/min]									
Gearbox	1000	630	400	250	160	100	63	40	25	≤16
	Max. radial force, Hollow shaft									
	$F_{rad,max}$ [N]	$F_{rad,max}$ [N]	$F_{rad,max}$ [N]	$F_{rad,max}$ [N]	$F_{rad,max}$ [N]	$F_{rad,max}$ [N]	$F_{rad,max}$ [N]	$F_{rad,max}$ [N]	$F_{rad,max}$ [N]	$F_{rad,max}$ [N]
GKR03	900	1200	2200	2500	2800	3000	3000	3000	3000	3000
GKR04	1000	2200	2550	3000	3300	3600	3600	3600	3600	3600
GKR05	1500	2250	3800	4500	5100	6200	7400	7800	7800	7800
GKR06	3000	3800	5000	5200	5500	7000	9000	10000	10000	10000
	Max. axial force, Hollow shaft									
	$F_{ax,max}$ [N]	$F_{ax,max}$ [N]	$F_{ax,max}$ [N]	$F_{ax,max}$ [N]	$F_{ax,max}$ [N]	$F_{ax,max}$ [N]	$F_{ax,max}$ [N]	$F_{ax,max}$ [N]	$F_{ax,max}$ [N]	$F_{ax,max}$ [N]
GKR03	600	800	1000	1100	1250	1400	1400	1400	1400	1400
GKR04	700	1000	1275	1500	1650	1800	1800	1800	1800	1800
GKR05	1100	1500	1900	2200	2500	3100	3700	3900	3900	3900
GKR06	1500	2000	2500	2600	2750	3500	4500	5000	5000	5000

- Application of force F_{rad}: at hollow shaft end face (x = 0)
- $F_{ax,max}$ only valid with F_{rad} = 0
- Neither radial nor axial forces are permissible for the hollow shaft with shrink disc (S□□).

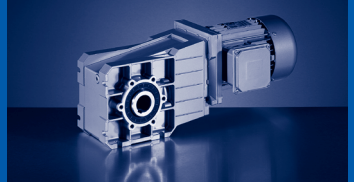

GKR□□-2□ V□R

Size	n_2 [r/min]									
Gearbox	1000	630	400	250	160	100	63	40	25	≤16
	Max. radial force, Solid shaft without flange									
	$F_{rad,max}$	$F_{rad,max}$	$F_{rad,max}$	$F_{rad,max}$	$F_{rad,max}$	$F_{rad,max}$	$F_{rad,max}$	$F_{rad,max}$	$F_{rad,max}$	$F_{rad,max}$
	[N]	[N]	[N]	[N]	[N]	[N]	[N]	[N]	[N]	[N]
GKR03	900	1200	1800	2100	2400	2800	3000	3000	3000	3000
GKR04	1000	1800	2100	2500	2700	3000	3000	3000	3000	3000
GKR05	1500	2350	3000	3600	4500	5000	6000	6500	6500	6500
GKR06	2000	2800	4000	4200	4500	5600	7300	8600	9000	9000
	Max. axial force, Solid shaft without flange									
	$F_{ax,max}$	$F_{ax,max}$	$F_{ax,max}$	$F_{ax,max}$	$F_{ax,max}$	$F_{ax,max}$	$F_{ax,max}$	$F_{ax,max}$	$F_{ax,max}$	$F_{ax,max}$
	[N]	[N]	[N]	[N]	[N]	[N]	[N]	[N]	[N]	[N]
GKR03	600	800	1000	1100	1250	1400	1400	1400	1400	1400
GKR04	700	1000	1275	1500	1650	1800	1800	1800	1800	1800
GKR05	1100	1520	1900	2200	2500	3100	3700	3900	3900	3900
GKR06	1500	2000	2500	2600	2750	3500	4500	5000	5000	5000

GKR□□-2□ V□K

Size	n_2 [r/min]									
Gearbox	1000	630	400	250	160	100	63	40	25	≤16
	Max. radial force, Solid shaft with flange									
	$F_{rad,max}$	$F_{rad,max}$	$F_{rad,max}$	$F_{rad,max}$	$F_{rad,max}$	$F_{rad,max}$	$F_{rad,max}$	$F_{rad,max}$	$F_{rad,max}$	$F_{rad,max}$
	[N]	[N]	[N]	[N]	[N]	[N]	[N]	[N]	[N]	[N]
GKR03	900	1200	1800	2100	2400	2800	3000	3000	3000	3000
GKR04	1000	1800	2100	2500	2700	3000	3000	3000	3000	3000
GKR05	2400	3600	5200	6000	6500	6500	6500	6500	6500	6500
GKR06	3000	4000	5500	6200	7000	9000	9000	9000	9000	9000
	Max. axial force, Solid shaft with flange									
	$F_{ax,max}$	$F_{ax,max}$	$F_{ax,max}$	$F_{ax,max}$	$F_{ax,max}$	$F_{ax,max}$	$F_{ax,max}$	$F_{ax,max}$	$F_{ax,max}$	$F_{ax,max}$
	[N]	[N]	[N]	[N]	[N]	[N]	[N]	[N]	[N]	[N]
GKR03	600	800	1000	1100	1250	1400	1400	1400	1400	1400
GKR04	700	1000	1275	1500	1650	1800	1800	1800	1800	1800
GKR05	1100	1500	1900	2200	2500	3100	3700	3900	3900	3900
GKR06	1500	2000	2500	2600	2750	3500	4500	5000	5000	5000

- Application of force F_{rad}: centre of shaft journal (x = l/2)
- $F_{ax,max}$ only valid with F_{rad} = 0

Output backlash in angular minutes

► Backlash φ depending on ratio i

GKR03...06-2

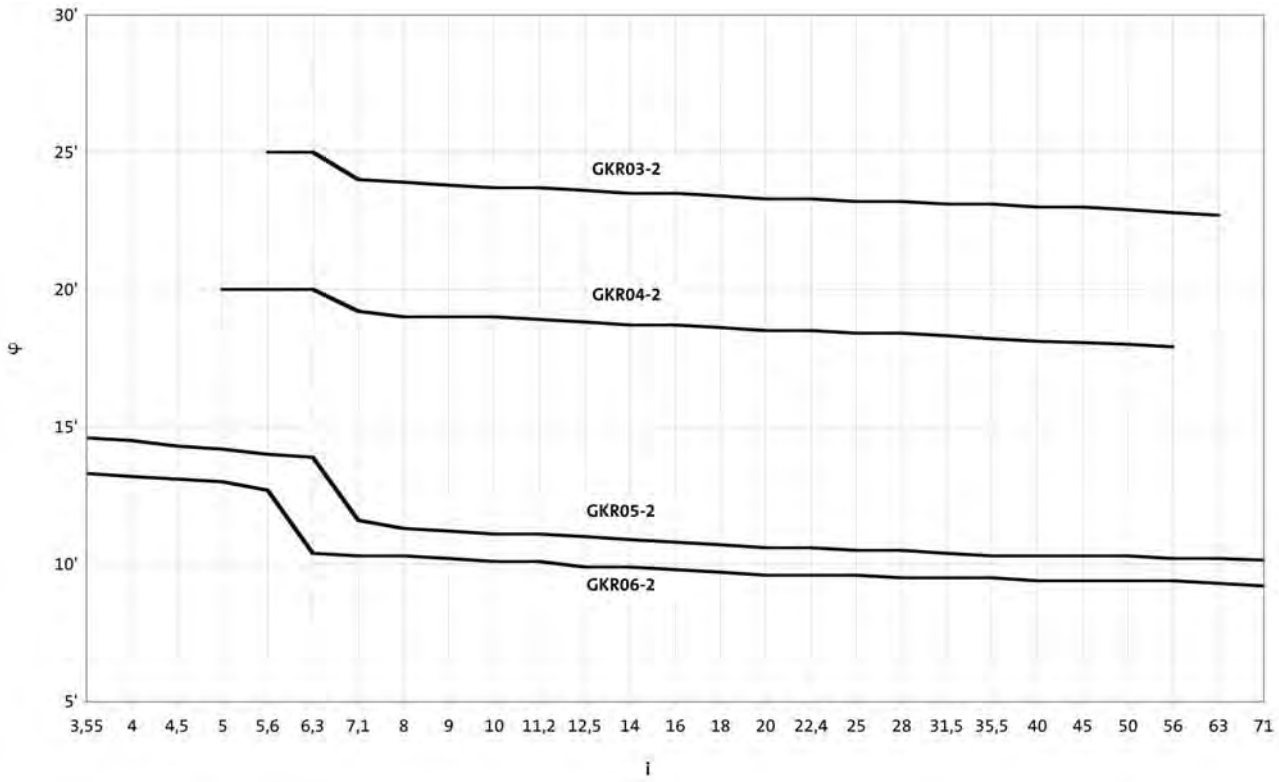

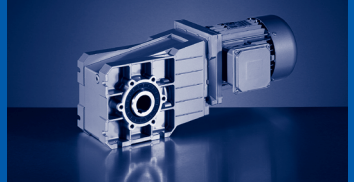

GKR□□-2

► Moment of inertia (J) depending on ratio i

Gearbox			GKR03
5.411	J	[kgcm²]	0.307
6.222	J	[kgcm²]	0.276
7.111	J	[kgcm²]	0.196
8.178	J	[kgcm²]	0.178
9.101	J	[kgcm²]	0.134
10.466	J	[kgcm²]	0.123
11.640	J	[kgcm²]	0.086
13.386	J	[kgcm²]	0.079
15.111	J	[kgcm²]	0.059
17.378	J	[kgcm²]	0.055
19.365	J	[kgcm²]	0.038
22.270	J	[kgcm²]	0.054
25.051	J	[kgcm²]	0.025
28.808	J	[kgcm²]	0.023
32.593	J	[kgcm²]	0.016
37.481	J	[kgcm²]	0.015
42.222	J	[kgcm²]	0.010
48.556	J	[kgcm²]	0.009
53.889	J	[kgcm²]	0.006
61.972	J	[kgcm²]	0.006

Gearbox			GKR04
5.185	J	[kgcm²]	0.813
5.963	J	[kgcm²]	0.723
7.111	J	[kgcm²]	0.446
8.178	J	[kgcm²]	0.410
9.101	J	[kgcm²]	3.270
10.466	J	[kgcm²]	0.300
11.449	J	[kgcm²]	0.260
12.698	J	[kgcm²]	1.990
14.603	J	[kgcm²]	0.181
15.556	J	[kgcm²]	1.470
17.889	J	[kgcm²]	0.135
19.556	J	[kgcm²]	0.096
22.489	J	[kgcm²]	0.090
25.185	J	[kgcm²]	0.065
28.963	J	[kgcm²]	0.060
31.919	J	[kgcm²]	0.042
36.707	J	[kgcm²]	0.040
40.000	J	[kgcm²]	0.029
46.000	J	[kgcm²]	0.027
52.698	J	[kgcm²]	0.017
60.603	J	[kgcm²]	0.017

Gearbox			GKR05
3.565	J	[kgcm²]	4.950
4.889	J	[kgcm²]	2.793
6.257	J	[kgcm²]	1.791
6.883	J	[kgcm²]	2.572
7.817	J	[kgcm²]	2.316
9.440	J	[kgcm²]	1.531
10.720	J	[kgcm²]	1.396
12.081	J	[kgcm²]	1.021
13.216	J	[kgcm²]	0.874
13.719	J	[kgcm²]	0.938
15.008	J	[kgcm²]	0.805
16.857	J	[kgcm²]	0.597
19.143	J	[kgcm²]	0.554
20.650	J	[kgcm²]	0.439
23.450	J	[kgcm²]	0.411
26.878	J	[kgcm²]	0.270
30.522	J	[kgcm²]	0.253
33.433	J	[kgcm²]	0.191
37.967	J	[kgcm²]	0.180
43.267	J	[kgcm²]	0.118
49.133	J	[kgcm²]	0.112
52.510	J	[kgcm²]	0.085
59.630	J	[kgcm²]	0.081
67.113	J	[kgcm²]	0.054
76.213	J	[kgcm²]	0.051

Gearbox			GKR06
3.431	J	[kgcm²]	9.576
4.706	J	[kgcm²]	5.607
6.022	J	[kgcm²]	3.658
6.481	J	[kgcm²]	5.112
7.146	J	[kgcm²]	4.539
8.889	J	[kgcm²]	3.233
9.800	J	[kgcm²]	2.929
11.376	J	[kgcm²]	2.209
12.444	J	[kgcm²]	1.890
13.720	J	[kgcm²]	1.734
15.873	J	[kgcm²]	1.321
17.500	J	[kgcm²]	1.225
19.444	J	[kgcm²]	0.991
21.438	J	[kgcm²]	0.928
25.309	J	[kgcm²]	0.632
27.903	J	[kgcm²]	0.594
31.481	J	[kgcm²]	0.457
34.708	J	[kgcm²]	0.432
40.741	J	[kgcm²]	0.284
44.917	J	[kgcm²]	0.270
49.444	J	[kgcm²]	0.207
54.513	J	[kgcm²]	0.197
62.500	J	[kgcm²]	0.134
68.906	J	[kgcm²]	0.127

► The moments of inertia relate to the drive shaft of the gearbox.
► The total moment of inertia is calculated by adding the values of gearbox, motor and accessories.

Ventilation position

GKR06

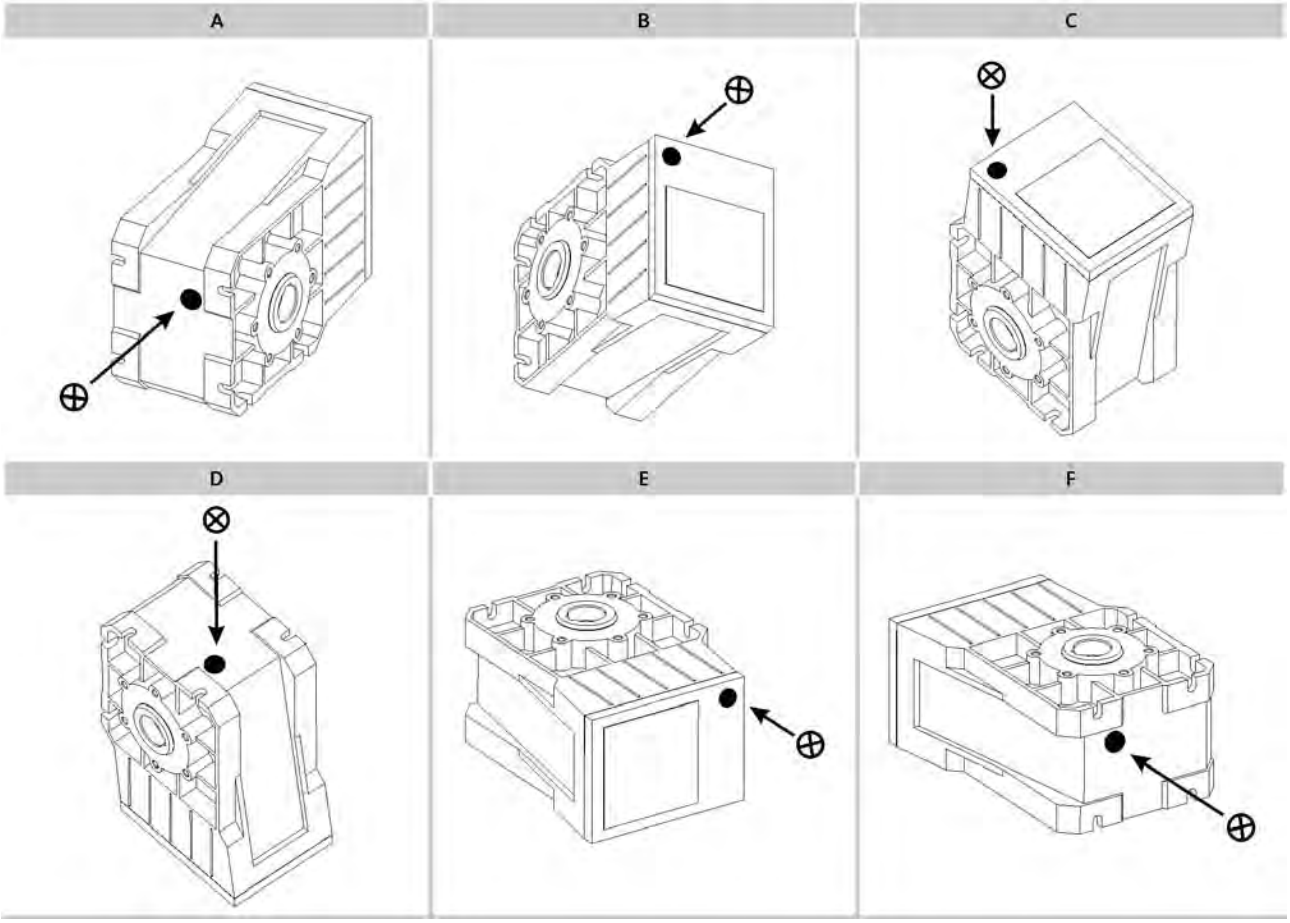

⊗ Ventilation

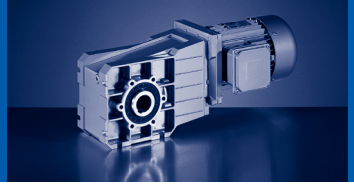

GKR□□-2M HAR / HBR

			063C11	063C12	063C31	063C32	063C42	071C11 071C13 071C31	071C32	071C33	071C42	080C11	080C13
GKR03	m	[kg]		7		7			8		9		
GKR04	m	[kg]	9					11				15	16
GKR05	m	[kg]					14	16	15	16		20	21
GKR06	m	[kg]					22	24	23	24		28	29

			080C31	080C32 080C33 080C42	090C11 090C31	090C32	100C12	100C31	100C32	100C41	112C22	112C31	112C32	112C41
GKR04	m	[kg]	15	16	23	21								
GKR05	m	[kg]	20	21	27	25	34	31	34	31				
GKR06	m	[kg]	28	29	36	34	43	40	43	40	51	48	58	55

GKR□□-2M HAK

			063C11	063C12	063C31	063C32	063C42	071C11	071C13 071C31	071C32	071C33	071C42	080C11	080C13
GKR03	m	[kg]		7		7				9		9		
GKR04	m	[kg]	9				10	11	12	11	12		16	17
GKR05	m	[kg]					15	17		16	17		21	22
GKR06	m	[kg]					23	25		24	25		29	30

			080C31	080C32 080C33 080C42	090C11 090C31	090C32	100C12	100C31	100C32	100C41	112C22	112C31	112C32	112C41
GKR04	m	[kg]	16	17	23	21								
GKR05	m	[kg]	21	22	28	26	35	32	35	32				
GKR06	m	[kg]	29	30	37	35	44	41	44	41	52	49	59	56

► Weights with oil filling for mounting position A; all values are approximate.
The weights relate to the basic version. Bear in mind that additional weights may be needed (e.g. for motor options).

GKR□□-2M VAR / VBR

			063C11	063C12	063C31	063C32	063C42	071C11	071C13 071C31	071C32	071C33	071C42	080C11	080C13
GKR03	m	[kg]		7		7				9		9		
GKR04	m	[kg]	9				10	11	12	11	12		16	17
GKR05	m	[kg]					15	17		16	17		21	22
GKR06	m	[kg]					24	25	26	25	26		29	30

			080C31	080C32 080C33 080C42	090C11 090C31	090C32	100C12	100C31	100C32	100C41	112C22	112C31	112C32	112C41
GKR04	m	[kg]	16	17	23	21								
GKR05	m	[kg]	21	22	28	26	35	32	35	32				
GKR06	m	[kg]	29	30	38	36	45	42	45	42	53	50	60	57

GKR□□-2M VAK

			063C11	063C12	063C31	063C32	063C42	071C11	071C13 071C31	071C32	071C33	071C42	080C11	080C13
GKR03	m	[kg]		7		7	8			9		10		
GKR04	m	[kg]	10		9	10				12			16	17
GKR05	m	[kg]					16	18		17	18		22	23
GKR06	m	[kg]					25	26	27	26	27		30	31

			080C31	080C32 080C33 080C42	090C11 090C31	090C32	100C12	100C31	100C32	100C41	112C22	112C31	112C32	112C41
GKR04	m	[kg]	16	17	24	22								
GKR05	m	[kg]	22	23	29	27	36	33	36	33				
GKR06	m	[kg]	30	31	39	37	46	43	46	43	54	51	61	58

► Weights with oil filling for mounting position A; all values are approximate.
The weights relate to the basic version. Bear in mind that additional weights may be needed (e.g. for motor options).

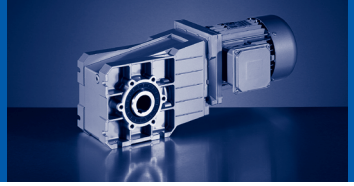

GKR□□-2M SAR / SBR

			063C11	063C12	063C31	063C32	063C42	071C11	071C13 071C31	071C32	071C33	071C42	080C11	080C13
GKR03	m	[kg]		7		7				9		9		
GKR04	m	[kg]	9				10	11	12	11	12		16	17
GKR05	m	[kg]					14	16	17	16	17		20	21
GKR06	m	[kg]					23	25		24	25		29	30

			080C31	080C32 080C33 080C42	090C11 090C31	090C32	100C12	100C31	100C32	100C41	112C22	112C31	112C32	112C41
GKR04	m	[kg]	16	17	23	21								
GKR05	m	[kg]	20	21	28	26	35	32	35	32				
GKR06	m	[kg]	29	30	37	35	44	41	44	41	52	49	59	56

GKR□□-2M SAK

			063C11	063C12	063C31	063C32	063C42	071C11	071C13 071C31	071C32	071C33	071C42	080C11	080C13
GKR03	m	[kg]		7		7	8			9		10		
GKR04	m	[kg]	10		9	10				12			16	17
GKR05	m	[kg]					15	17	18	17	18		21	22
GKR06	m	[kg]					24	26		25	26		30	31

			080C31	080C32 080C33 080C42	090C11 090C31	090C32	100C12	100C31	100C32	100C41	112C22	112C31	112C32	112C41
GKR04	m	[kg]	16	17	24	22								
GKR05	m	[kg]	21	22	29	27	36	33	36	33				
GKR06	m	[kg]	30	31	38	36	45	42	45	42	53	50	60	57

► Weights with oil filling for mounting position A; all values are approximate.
The weights relate to the basic version. Bear in mind that additional weights may be needed (e.g. for motor options).

GKR□□-2M HAR / HBR

			080C32	090C12	090C32	100C12
GKR04	m	[kg]	16	22	24	
GKR05	m	[kg]	21	26	28	34
GKR06	m	[kg]	29	35	37	43

			100C32	112C22	132C12	132C22
GKR05	m	[kg]	37			
GKR06	m	[kg]	45	58	80	87

GKR□□-2M HAK

			080C32	090C12	090C32	100C12
GKR04	m	[kg]	17	22	24	
GKR05	m	[kg]	22	27	29	35
GKR06	m	[kg]	30	36	38	44

			100C32	112C22	132C12	132C22
GKR05	m	[kg]	38			
GKR06	m	[kg]	46	59	81	88

- Weights with oil filling for mounting position A; all values are approximate.
  The weights relate to the basic version. Bear in mind that additional weights may be needed (e.g. for motor options).

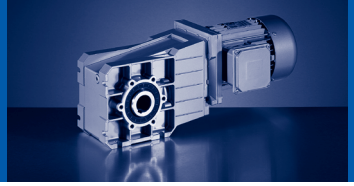

GKR□□-2M VAR / VBR

			080C32	090C12	090C32	100C12
GKR04	m	[kg]	17	22	24	
GKR05	m	[kg]	22	27	29	35
GKR06	m	[kg]	30	37	39	45

			100C32	112C22	132C12	132C22
GKR05	m	[kg]	38			
GKR06	m	[kg]	47	60	82	89

GKR□□-2M VAK

			080C32	090C12	090C32	100C12
GKR04	m	[kg]	17	23	25	
GKR05	m	[kg]	23	28	30	36
GKR06	m	[kg]	31	38	40	46

			100C32	112C22	132C12	132C22
GKR05	m	[kg]	39			
GKR06	m	[kg]	48	61	83	90

- Weights with oil filling for mounting position A; all values are approximate.
  The weights relate to the basic version. Bear in mind that additional weights may be needed (e.g. for motor options).

GKR□□-2M SAR / SBR

			080C32	090C12	090C32	100C12
GKR04	m	[kg]	17	22	24	
GKR05	m	[kg]	21	27	29	35
GKR06	m	[kg]	30	36	38	44

			100C32	112C22	132C12	132C22
GKR05	m	[kg]	38			
GKR06	m	[kg]	46	59	81	88

GKR□□-2M SAK

			080C32	090C12	090C32	100C12
GKR04	m	[kg]	17	23	25	
GKR05	m	[kg]	22	28	30	36
GKR06	m	[kg]	31	37	39	45

			100C32	112C22	132C12	132C22
GKR05	m	[kg]	39			
GKR06	m	[kg]	47	60	82	89

- Weights with oil filling for mounting position A; all values are approximate.
  The weights relate to the basic version. Bear in mind that additional weights may be needed (e.g. for motor options).

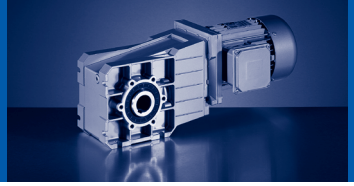

50 Hz: P_N=0.06 kW
60 Hz: P_N=0.075 kW
87 Hz: P_N=0.11 kW

n_N	1425 r/min		1725 r/min		2535 r/min		M_2 [Nm]	i		
f_N	50 Hz		60 Hz		87 Hz					
P_N	0.06 kW		0.075 kW		0.11 kW					
	n_2 [r/min]	c	n_2 [r/min]	c	n_2 [r/min]	c				
	64	5.3	78	5.1	114	4.4	9.0	22.270	GKR03-2M □□□063C02	498
	57	4.7	69	4.7	101	4.5	10	25.051	GKR03-2M □□□063C02	498
	50	4.1	60	4.1	88	3.9	11	28.808	GKR03-2M □□□063C02	498
	44	3.6	53	3.6	78	3.5	12	32.593	GKR03-2M □□□063C02	498
	38	3.1	46	3.1	68	3.0	14	37.481	GKR03-2M □□□063C02	498
	34	2.8	41	2.8	60	2.8	16	42.222	GKR03-2M □□□063C02	498
	29	2.4	36	2.4	52	2.4	19	48.556	GKR03-2M □□□063C02	498
	26	2.2	32	2.2	47	2.2	21	53.889	GKR03-2M □□□063C02	498
	23	1.9	28	1.9	41	1.9	24	61.972	GKR03-2M □□□063C02	498

50 Hz: P_N=0.09 kW
60 Hz: P_N=0.11 kW
87 Hz: P_N=0.16 kW

n_N	1375 r/min		1675 r/min		2485 r/min		M_2 [Nm]	i		
f_N	50 Hz		60 Hz		87 Hz					
P_N	0.09 kW		0.11 kW		0.16 kW					
	n_2 [r/min]	c	n_2 [r/min]	c	n_2 [r/min]	c				
	103	5.7	125	5.5	186	4.8	8.0	13.386	GKR03-2M □□□063C22	498
	91	5.0	111	4.8	164	4.2	9.0	15.111	GKR03-2M □□□063C22	498
	79	4.4	96	4.2	143	3.7	10	17.378	GKR03-2M □□□063C22	498
	71	3.9	87	3.8	128	3.3	12	19.365	GKR03-2M □□□063C22	498
	62	3.4	75	3.3	112	2.9	13	22.270	GKR03-2M □□□063C22	498
	55	3.0	67	3.0	99	2.9	15	25.051	GKR03-2M □□□063C22	498
	48	2.6	58	2.6	86	2.5	17	28.808	GKR03-2M □□□063C22	498
	42	2.3	51	2.3	76	2.2	19	32.593	GKR03-2M □□□063C22	498
	37	2.0	45	2.0	66	1.9	22	37.481	GKR03-2M □□□063C22	498
	33	1.8	40	1.8	59	1.8	25	42.222	GKR03-2M □□□063C22	498
	28	1.6	35	1.6	51	1.6	29	48.556	GKR03-2M □□□063C22	498
	26	1.4	31	1.4	46	1.4	32	53.889	GKR03-2M □□□063C22	498
	22	1.2	27	1.2	40	1.2	37	61.972	GKR03-2M □□□063C22	498

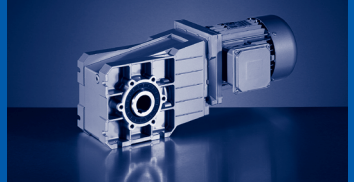

50 Hz: P_N=0.12 kW
60 Hz: P_N=0.145 kW
87 Hz: P_N=0.21 kW

n_N	1425 r/min		1725 r/min		2535 r/min		M_2 [Nm]	i		
f_N	50 Hz		60 Hz		87 Hz					
P_N	0.12 kW		0.145 kW		0.21 kW					
	n_2 [r/min]	c	n_2 [r/min]	c	n_2 [r/min]	c				
	136	5.6	165	5.4	242	4.7	8.0	10.466	GKR03-2M □□□063C12	498
	125	5.4	151	5.1	221	4.5	9.0	11.449	GKR04-2M □□□063C12	498
	122	5.1	148	4.8	218	4.3	9.0	11.640	GKR03-2M □□□063C12	498
	112	5.0	136	4.8	200	4.2	10	12.698	GKR04-2M □□□063C12	498
	107	4.4	129	4.2	189	3.7	10	13.386	GKR03-2M □□□063C12	498
	98	5.0	118	4.8	174	4.2	11	14.603	GKR04-2M □□□063C12	498
	94	3.9	114	3.7	168	3.3	12	15.111	GKR03-2M □□□063C12	498
	82	3.4	99	3.2	146	2.9	13	17.378	GKR03-2M □□□063C12	498
	74	3.0	89	2.9	131	2.6	15	19.365	GKR03-2M □□□063C12	498
	73	5.5	88	5.2	130	4.6	15	19.556	GKR04-2M □□□063C12	498
	64	2.6	78	2.5	114	2.2	17	22.270	GKR03-2M □□□063C12	498
	63	5.2	77	5.0	113	4.4	17	22.489	GKR04-2M □□□063C12	498
	57	2.4	69	2.4	101	2.2	19	25.051	GKR03-2M □□□063C12	498
	57	4.6	69	4.6	101	4.4	19	25.185	GKR04-2M □□□063C12	498
	50	2.0	60	2.0	88	2.0	22	28.808	GKR03-2M □□□063C12	498
	49	4.1	60	4.1	88	3.9	22	28.963	GKR04-2M □□□063C12	498
	45	3.7	54	3.7	79	3.5	24	31.919	GKR04-2M □□□063C12	498
	44	1.8	53	1.8	78	1.7	25	32.593	GKR03-2M □□□063C12	498
	39	3.2	47	3.2	69	3.1	28	36.707	GKR04-2M □□□063C12	498
	38	1.6	46	1.6	68	1.5	29	37.481	GKR03-2M □□□063C12	498
	36	3.0	43	3.0	63	2.8	31	40.000	GKR04-2M □□□063C12	498
	34	1.4	41	1.4	60	1.4	32	42.222	GKR03-2M □□□063C12	498
	31	2.6	38	2.6	55	2.6	35	46.000	GKR04-2M □□□063C12	498
	29	1.2	36	1.2	52	1.2	37	48.556	GKR03-2M □□□063C12	498
	27	1.7	33	1.7	48	1.7	40	52.698	GKR04-2M □□□063C12	498
	26	1.1	32	1.1	47	1.1	41	53.889	GKR03-2M □□□063C12	498
	24	1.7	29	1.7	42	1.7	46	60.603	GKR04-2M □□□063C12	498
	23	1.0	28	1.0	41	1.0	47	61.972	GKR03-2M □□□063C12	498

50 Hz: P_N=0.18 kW
60 Hz: P_N=0.22 kW

n_N	2740 r/min		3340 r/min				M_2 [Nm]	i		
f_N	50 Hz		60 Hz							
P_N	0.18 kW		0.22 kW							
	n_2 [r/min]	c	n_2 [r/min]	c						
	239	5.7	292	5.3			7.0	11.449	GKR04-2M □□□063C11	498
	216	5.3	263	4.9			8.0	12.698	GKR04-2M □□□063C11	498
	188	5.3	229	4.9			9.0	14.603	GKR04-2M □□□063C11	498
	140	5.8	171	5.4			12	19.556	GKR04-2M □□□063C11	498
	122	5.5	149	5.1			13	22.489	GKR04-2M □□□063C11	498
	109	5.5	133	5.1			15	25.185	GKR04-2M □□□063C11	498
	95	4.9	115	4.5			17	28.963	GKR04-2M □□□063C11	498
	86	4.4	105	4.1			19	31.919	GKR04-2M □□□063C11	498
	75	3.8	91	3.6			22	36.707	GKR04-2M □□□063C11	498
	69	3.5	84	3.3			24	40.000	GKR04-2M □□□063C11	498
	60	3.3	73	3.2			27	46.000	GKR04-2M □□□063C11	498
	52	2.2	63	2.1			31	52.698	GKR04-2M □□□063C11	498
	45	2.2	55	2.1			36	60.603	GKR04-2M □□□063C11	498

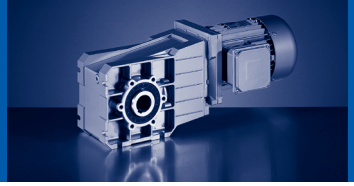

50 Hz: P_N=0.18 kW
60 Hz: P_N=0.22 kW
87 Hz: P_N=0.33 kW

n_N	1365 r/min		1665 r/min		2475 r/min		M_2 [Nm]	i		
f_N	50 Hz		60 Hz		87 Hz					
P_N	0.18 kW		0.22 kW		0.33 kW					
	n_2 [r/min]	c	n_2 [r/min]	c	n_2 [r/min]	c				
	219	5.4	268	5.3	398	4.6	7.0	6.222	GKR03-2M □□□063C32	498
	192	5.1	234	4.9	348	4.3	9.0	7.111	GKR03-2M □□□063C32	498
	167	4.5	204	4.4	303	3.8	10	8.178	GKR03-2M □□□063C32	498
	150	4.1	183	4.0	272	3.5	11	9.101	GKR03-2M □□□063C32	498
	130	3.6	159	3.5	237	3.0	13	10.466	GKR03-2M □□□063C32	498
	119	3.4	145	3.3	216	2.9	14	11.449	GKR04-2M □□□063C32	498
	117	3.2	143	3.1	213	2.7	14	11.640	GKR03-2M □□□063C32	498
	108	3.2	131	3.1	195	2.7	15	12.698	GKR04-2M □□□063C32	498
	102	2.8	124	2.7	185	2.4	16	13.386	GKR03-2M □□□063C32	498
	94	3.2	114	3.1	170	2.7	18	14.603	GKR04-2M □□□063C32	498
	90	2.5	110	2.4	164	2.1	18	15.111	GKR03-2M □□□063C32	498
	79	2.2	96	2.1	142	1.8	21	17.378	GKR03-2M □□□063C32	498
	71	1.9	86	1.9	128	1.6	23	19.365	GKR03-2M □□□063C32	498
	70	3.5	85	3.4	127	3.0	23	19.556	GKR04-2M □□□063C32	498
	61	1.7	75	1.6	111	1.4	27	22.270	GKR03-2M □□□063C32	498
	61	3.4	74	3.2	110	2.8	27	22.489	GKR04-2M □□□063C32	498
	55	1.5	67	1.5	99	1.4	30	25.051	GKR03-2M □□□063C32	498
	54	2.9	66	2.9	98	2.8	30	25.185	GKR04-2M □□□063C32	498
	47	1.3	58	1.3	86	1.3	35	28.808	GKR03-2M □□□063C32	498
	47	2.6	58	2.6	86	2.5	35	28.963	GKR04-2M □□□063C32	498
	43	2.4	52	2.4	78	2.3	38	31.919	GKR04-2M □□□063C32	498
	42	1.2	51	1.2	76	1.1	39	32.593	GKR03-2M □□□063C32	498
	37	2.1	45	2.1	67	2.0	44	36.707	GKR04-2M □□□063C32	498
	36	1.0	44	1.0	66	1.0	45	37.481	GKR03-2M □□□063C32	498
	34	1.9	42	1.9	62	1.8	48	40.000	GKR04-2M □□□063C32	498
	32	0.9	39	0.9	59	0.9	51	42.222	GKR03-2M □□□063C32	498
	30	1.6	36	1.6	54	1.6	55	46.000	GKR04-2M □□□063C32	498
	26	1.1	32	1.1	47	1.1	63	52.698	GKR04-2M □□□063C32	498
	23	1.1	28	1.1	41	1.1	73	60.603	GKR04-2M □□□063C32	498

50 Hz: P_N=0.18 kW
60 Hz: P_N=0.22 kW

n_N	930 r/min		1130 r/min				M_2 [Nm]	i		
f_N	50 Hz		60 Hz							
P_N	0.18 kW		0.22 kW							
	n_2 [r/min]	c	n_2 [r/min]	c						
	179	5.4	218	5.4			9.0	5.185	GKR04-2M □□□071C13	498
	156	5.4	190	5.4			11	5.963	GKR04-2M □□□071C13	498
	131	5.4	159	5.4			13	7.111	GKR04-2M □□□071C13	498
	114	5.4	138	5.4			14	8.178	GKR04-2M □□□071C13	498
	102	5.3	124	5.3			16	9.101	GKR04-2M □□□071C13	498
	89	4.8	108	4.8			18	10.466	GKR04-2M □□□071C13	498
	81	4.5	99	4.5			20	11.449	GKR04-2M □□□071C13	498
	73	4.0	89	4.0			22	12.698	GKR04-2M □□□071C13	498
	70	5.4	86	5.4			23	13.216	GKR05-2M □□□071C13	498
	64	3.5	77	3.5			26	14.603	GKR04-2M □□□071C13	498
	62	5.4	75	5.4			26	15.008	GKR05-2M □□□071C13	498
	60	3.3	73	3.3			27	15.556	GKR04-2M □□□071C13	498
	52	2.9	63	2.9			31	17.889	GKR04-2M □□□071C13	498
	48	2.6	58	2.6			34	19.556	GKR04-2M □□□071C13	498
	41	2.3	50	2.3			40	22.489	GKR04-2M □□□071C13	498
	37	2.0	45	2.0			44	25.185	GKR04-2M □□□071C13	498
	32	1.8	39	1.8			51	28.963	GKR04-2M □□□071C13	498
	31	4.5	37	4.5			54	30.522	GKR05-2M □□□071C13	498
	29	1.6	35	1.6			56	31.919	GKR04-2M □□□071C13	498
	25	1.4	31	1.4			65	36.707	GKR04-2M □□□071C13	498
	23	1.3	28	1.3			70	40.000	GKR04-2M □□□071C13	498
	22	3.2	26	3.2			76	43.267	GKR05-2M □□□071C13	498
	20	1.1	25	1.1			81	46.000	GKR04-2M □□□071C13	498
	19	2.8	23	2.8			86	49.133	GKR05-2M □□□071C13	498
	18	2.6	22	2.6			92	52.510	GKR05-2M □□□071C13	498
	16	2.3	19	2.3			105	59.630	GKR05-2M □□□071C13	498
	15	3.0	18	3.0			110	62.500	GKR06-2M □□□071C13	498
	14	3.0	16	3.0			121	68.906	GKR06-2M □□□071C13	498

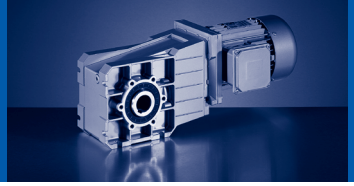

50 Hz: P_N=0.25 kW
60 Hz: P_N=0.31 kW

n_N	2710 r/min		3310 r/min				M_2 [Nm]	i		
f_N	50 Hz		60 Hz							
P_N	0.25 kW		0.31 kW							
	n_2 [r/min]	c	n_2 [r/min]	c						
	237	4.0	289	3.8			10	11.449	GKR04-2M □□□063C31	498
	213	3.8	261	3.5			11	12.698	GKR04-2M □□□063C31	498
	186	3.8	227	3.5			12	14.603	GKR04-2M □□□063C31	498
	139	4.1	169	3.9			16	19.556	GKR04-2M □□□063C31	498
	121	3.9	147	3.7			19	22.489	GKR04-2M □□□063C31	498
	108	3.9	131	3.7			21	25.185	GKR04-2M □□□063C31	498
	94	3.5	114	3.2			24	28.963	GKR04-2M □□□063C31	498
	85	3.1	104	2.9			27	31.919	GKR04-2M □□□063C31	498
	74	2.7	90	2.6			31	36.707	GKR04-2M □□□063C31	498
	68	2.5	83	2.4			34	40.000	GKR04-2M □□□063C31	498
	59	2.3	72	2.3			39	46.000	GKR04-2M □□□063C31	498
	51	1.6	63	1.5			44	52.698	GKR04-2M □□□063C31	498
	45	1.6	55	1.5			51	60.603	GKR04-2M □□□063C31	498

50 Hz: P_N=0.25 kW
60 Hz: P_N=0.31 kW
87 Hz: P_N=0.45 kW

n_N	1370 r/min		1670 r/min		2480 r/min		M_2 [Nm]	i		
f_N	50 Hz		60 Hz		87 Hz					
P_N	0.25 kW		0.31 kW		0.45 kW					
	n_2 [r/min]	c	n_2 [r/min]	c	n_2 [r/min]	c				
	264	4.6	322	4.4	478	3.9	9.0	5.185	GKR04-2M □□□063C42	498
	253	4.4	309	4.2	458	3.7	9.0	5.411	GKR03-2M □□□063C42	498
	230	4.6	280	4.4	416	3.9	10	5.963	GKR04-2M □□□063C42	498
	220	3.9	268	3.8	399	3.3	10	6.222	GKR03-2M □□□063C42	498
	193	3.7	235	3.5	349	3.1	12	7.111	GKR03-2M □□□063C42	498
	193	4.6	235	4.4	349	3.9	12	7.111	GKR04-2M □□□063C42	498
	168	3.3	204	3.2	303	2.8	14	8.178	GKR03-2M □□□063C42	498
	168	4.6	204	4.4	303	3.9	14	8.178	GKR04-2M □□□063C42	498
	151	3.0	184	2.9	273	2.5	15	9.101	GKR03-2M □□□063C42	498
	151	5.2	184	5.0	273	4.4	15	9.101	GKR04-2M □□□063C42	498
	131	2.6	160	2.5	237	2.2	17	10.466	GKR03-2M □□□063C42	498
	131	5.1	160	4.9	237	4.3	17	10.466	GKR04-2M □□□063C42	498
	120	4.8	146	4.6	217	4.0	19	11.449	GKR04-2M □□□063C42	498
	118	2.3	144	2.3	213	2.0	19	11.640	GKR03-2M □□□063C42	498
	108	4.3	132	4.1	195	3.6	21	12.698	GKR04-2M □□□063C42	498
	104	4.6	126	4.4	188	3.9	22	13.216	GKR05-2M □□□063C42	498
	102	2.0	125	2.0	185	1.7	22	13.386	GKR03-2M □□□063C42	498
	94	3.7	114	3.6	170	3.2	24	14.603	GKR04-2M □□□063C42	498
	91	1.8	111	1.7	164	1.5	25	15.111	GKR03-2M □□□063C42	498
	91	4.6	111	4.4	165	3.9	25	15.008	GKR05-2M □□□063C42	498
	88	3.5	107	3.4	159	3.0	26	15.556	GKR04-2M □□□063C42	498
	79	1.6	96	1.5	143	1.3	29	17.378	GKR03-2M □□□063C42	498
	77	3.0	93	2.9	139	2.6	30	17.889	GKR04-2M □□□063C42	498
	71	1.4	86	1.4	128	1.2	32	19.365	GKR03-2M □□□063C42	498
	70	2.8	85	2.7	127	2.4	32	19.556	GKR04-2M □□□063C42	498
	62	1.2	75	1.2	111	1.0	37	22.270	GKR03-2M □□□063C42	498
	61	2.4	74	2.3	110	2.0	37	22.489	GKR04-2M □□□063C42	498
	55	1.1	67	1.1	99	1.0	42	25.051	GKR03-2M □□□063C42	498
	54	2.2	66	2.2	99	2.1	42	25.185	GKR04-2M □□□063C42	498
	48	0.9	58	0.9	86	0.9	48	28.808	GKR03-2M □□□063C42	498
	47	1.9	58	1.9	86	1.8	48	28.963	GKR04-2M □□□063C42	498
	45	4.3	55	4.3	81	4.1	51	30.522	GKR05-2M □□□063C42	498
	43	1.7	52	1.7	78	1.6	53	31.919	GKR04-2M □□□063C42	498
	42	0.8	51	0.8	76	0.8	54	32.593	GKR03-2M □□□063C42	498
	37	1.5	46	1.5	68	1.4	61	36.707	GKR04-2M □□□063C42	498
	34	1.2	42	1.2	62	1.2	66	40.000	GKR04-2M □□□063C42	498
	30	1.2	36	1.2	54	1.2	76	46.000	GKR04-2M □□□063C42	498
	28	3.0	34	3.0	51	3.0	81	49.133	GKR05-2M □□□063C42	498
	28	3.2	34	3.2	50	3.2	82	49.444	GKR06-2M □□□063C42	498
	26	2.8	32	2.8	47	2.8	87	52.510	GKR05-2M □□□063C42	498
	23	2.4	28	2.4	42	2.4	99	59.630	GKR05-2M □□□063C42	498

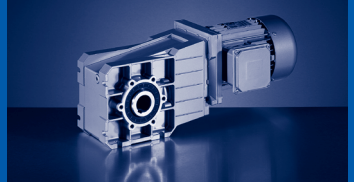

50 Hz: P_N=0.25 kW
60 Hz: P_N=0.31 kW
87 Hz: P_N=0.45 kW

n_N	1370 r/min		1670 r/min		2480 r/min		M_2 [Nm]	i		
f_N	50 Hz		60 Hz		87 Hz					
P_N	0.25 kW		0.31 kW		0.45 kW					
	n_2 [r/min]	c	n_2 [r/min]	c	n_2 [r/min]	c				
	22	2.6	27	2.6	40	2.6	104	62.500	GKR06-2M □□□063C42	498
	20	2.6	24	2.6	36	2.6	114	68.906	GKR06-2M □□□063C42	498

50 Hz: P_N=0.25 kW
60 Hz: P_N=0.3 kW

n_N	930 r/min		1130 r/min				M_2 [Nm]	i		
f_N	50 Hz		60 Hz							
P_N	0.25 kW		0.3 kW							
	n_2 [r/min]	c	n_2 [r/min]	c						
	179	3.9	218	3.9			13	5.185	GKR04-2M □□□071C33	498
	156	3.9	190	3.9			15	5.963	GKR04-2M □□□071C33	498
	131	3.9	159	3.9			17	7.111	GKR04-2M □□□071C33	498
	114	3.9	138	3.9			20	8.178	GKR04-2M □□□071C33	498
	102	3.8	124	3.8			22	9.101	GKR04-2M □□□071C33	498
	89	3.5	108	3.5			26	10.466	GKR04-2M □□□071C33	498
	81	3.2	99	3.2			28	11.449	GKR04-2M □□□071C33	498
	73	2.9	89	2.9			31	12.698	GKR04-2M □□□071C33	498
	70	3.9	86	3.9			32	13.216	GKR05-2M □□□071C33	498
	64	2.5	77	2.5			36	14.603	GKR04-2M □□□071C33	498
	62	3.9	75	3.9			37	15.008	GKR05-2M □□□071C33	498
	60	2.4	73	2.4			38	15.556	GKR04-2M □□□071C33	498
	52	2.1	63	2.1			44	17.889	GKR04-2M □□□071C33	498
	48	1.9	58	1.9			48	19.556	GKR04-2M □□□071C33	498
	41	1.6	50	1.6			55	22.489	GKR04-2M □□□071C33	498
	37	1.5	45	1.5			61	25.185	GKR04-2M □□□071C33	498
	32	1.3	39	1.3			71	28.963	GKR04-2M □□□071C33	498
	31	3.2	37	3.2			74	30.522	GKR05-2M □□□071C33	498
	29	1.2	35	1.2			78	31.919	GKR04-2M □□□071C33	498
	28	2.9	34	2.9			82	33.433	GKR05-2M □□□071C33	498
	25	1.0	31	1.0			90	36.707	GKR04-2M □□□071C33	498
	25	2.6	30	2.6			93	37.967	GKR05-2M □□□071C33	498
	23	0.9	28	0.9			98	40.000	GKR04-2M □□□071C33	498
	23	3.1	28	3.1			99	40.741	GKR06-2M □□□071C33	498
	22	2.3	26	2.3			106	43.267	GKR05-2M □□□071C33	498
	21	3.1	25	3.1			110	44.917	GKR06-2M □□□071C33	498
	20	0.8	25	0.8			112	46.000	GKR04-2M □□□071C33	498
	19	2.0	23	2.0			120	49.133	GKR05-2M □□□071C33	498
	19	2.7	23	2.7			121	49.444	GKR06-2M □□□071C33	498
	18	1.9	22	1.9			128	52.510	GKR05-2M □□□071C33	498
	16	1.7	19	1.7			145	59.630	GKR05-2M □□□071C33	498
	15	2.2	18	2.2			152	62.500	GKR06-2M □□□071C33	498
	14	2.2	16	2.2			168	68.906	GKR06-2M □□□071C33	498

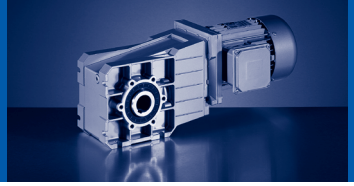

50 Hz: P_N=0.37 kW
60 Hz: P_N=0.45 kW

n_N	2720 r/min		3320 r/min				M_2 [Nm]	i		
f_N	50 Hz		60 Hz							
P_N	0.37 kW		0.45 kW							
	n_2 [r/min]	c	n_2 [r/min]	c						
	260	5.6	317	5.3			13	10.466	GKR04-2M □□□071C11	498
	238	5.2	290	4.9			14	11.449	GKR04-2M □□□071C11	498
	214	4.7	262	4.4			16	12.698	GKR04-2M □□□071C11	498
	186	4.1	227	3.8			18	14.603	GKR04-2M □□□071C11	498
	175	3.8	213	3.6			19	15.556	GKR04-2M □□□071C11	498
	152	3.3	186	3.1			22	17.889	GKR04-2M □□□071C11	498
	139	3.1	170	2.9			24	19.556	GKR04-2M □□□071C11	498
	121	2.7	148	2.5			28	22.489	GKR04-2M □□□071C11	498
	108	2.7	132	2.5			31	25.185	GKR04-2M □□□071C11	498
	94	2.4	115	2.2			36	28.963	GKR04-2M □□□071C11	498
	89	5.9	109	5.6			38	30.522	GKR05-2M □□□071C11	498
	85	2.1	104	2.0			39	31.919	GKR04-2M □□□071C11	498
	74	1.9	90	1.7			45	36.707	GKR04-2M □□□071C11	498
	68	1.7	83	1.6			49	40.000	GKR04-2M □□□071C11	498
	59	1.6	72	1.5			57	46.000	GKR04-2M □□□071C11	498
	55	4.0	68	3.8			61	49.133	GKR05-2M □□□071C11	498
	52	3.7	63	3.6			65	52.510	GKR05-2M □□□071C11	498
	46	3.3	56	3.2			74	59.630	GKR05-2M □□□071C11	498
	44	4.3	53	4.2			77	62.500	GKR06-2M □□□071C11	498
	40	4.3	48	4.2			85	68.906	GKR06-2M □□□071C11	498

50 Hz: P_N=0.37 kW
60 Hz: P_N=0.45 kW
87 Hz: P_N=0.66 kW

n_N	1410 r/min		1710 r/min		2520 r/min		M_2 [Nm]	i		
f_N	50 Hz		60 Hz		87 Hz					
P_N	0.37 kW		0.45 kW		0.66 kW					
	n_2 [r/min]	c	n_2 [r/min]	c	n_2 [r/min]	c				
	272	4.0	330	3.8	486	3.3	12	5.185	GKR04-2M □□□071C32	498
	261	3.1	316	2.9	466	2.6	13	5.411	GKR03-2M □□□071C32	498
	237	4.0	287	3.8	423	3.3	14	5.963	GKR04-2M □□□071C32	498
	227	2.7	275	2.6	405	2.3	15	6.222	GKR03-2M □□□071C32	498
	198	2.5	241	2.4	354	2.1	17	7.111	GKR03-2M □□□071C32	498
	198	4.0	241	3.8	354	3.3	17	7.111	GKR04-2M □□□071C32	498
	172	2.3	209	2.2	308	1.9	20	8.178	GKR03-2M □□□071C32	498
	172	4.0	209	3.8	308	3.3	20	8.178	GKR04-2M □□□071C32	498
	155	2.1	188	2.0	277	1.8	22	9.101	GKR03-2M □□□071C32	498
	155	3.9	188	3.7	277	3.3	22	9.101	GKR04-2M □□□071C32	498
	135	1.8	163	1.7	241	1.5	25	10.466	GKR03-2M □□□071C32	498
	135	3.6	163	3.4	241	3.0	25	10.466	GKR04-2M □□□071C32	498
	123	3.3	149	3.2	220	2.8	27	11.449	GKR04-2M □□□071C32	498
	121	1.6	147	1.6	217	1.4	28	11.640	GKR03-2M □□□071C32	498
	111	3.0	135	2.9	198	2.5	30	12.698	GKR04-2M □□□071C32	498
	107	4.0	129	3.8	191	3.3	32	13.216	GKR05-2M □□□071C32	498
	105	1.4	128	1.4	188	1.2	32	13.386	GKR03-2M □□□071C32	498
	97	2.6	117	2.5	173	2.2	35	14.603	GKR04-2M □□□071C32	498
	94	4.0	114	3.8	168	3.3	36	15.008	GKR05-2M □□□071C32	498
	93	1.3	113	1.2	167	1.1	36	15.111	GKR03-2M □□□071C32	498
	91	2.4	110	2.3	162	2.0	37	15.556	GKR04-2M □□□071C32	498
	81	1.1	98	1.0	145	0.9	41	17.378	GKR03-2M □□□071C32	498
	79	2.1	96	2.0	141	1.8	43	17.889	GKR04-2M □□□071C32	498
	73	1.0	88	0.9	130	0.8	46	19.365	GKR03-2M □□□071C32	498
	72	1.9	87	1.9	129	1.6	47	19.556	GKR04-2M □□□071C32	498
	63	0.9	77	0.8			53	22.270	GKR03-2M □□□071C32	498
	63	1.7	76	1.6	112	1.4	54	22.489	GKR04-2M □□□071C32	498
	56	1.5	68	1.5	100	1.4	60	25.185	GKR04-2M □□□071C32	498
	49	1.3	59	1.3	87	1.3	69	28.963	GKR04-2M □□□071C32	498
	46	3.3	56	3.3	83	3.2	73	30.522	GKR05-2M □□□071C32	498
	44	1.2	54	1.2	79	1.1	76	31.919	GKR04-2M □□□071C32	498
	42	3.0	51	3.0	75	2.9	80	33.433	GKR05-2M □□□071C32	498
	38	1.0	47	1.0	69	1.0	87	36.707	GKR04-2M □□□071C32	498
	37	2.7	45	2.7	66	2.5	90	37.967	GKR05-2M □□□071C32	498
	35	1.0	43	1.0	63	0.9	95	40.000	GKR04-2M □□□071C32	498
	35	3.2	42	3.2	62	3.2	97	40.741	GKR06-2M □□□071C32	498
	33	2.3	40	2.3	58	2.3	103	43.267	GKR05-2M □□□071C32	498
	31	0.8	37	0.8	55	0.8	110	46.000	GKR04-2M □□□071C32	498
	31	3.2	38	3.2	56	3.2	107	44.917	GKR06-2M □□□071C32	498
	29	2.1	35	2.1	51	2.1	117	49.133	GKR05-2M □□□071C32	498
	29	2.8	35	2.8	51	2.8	118	49.444	GKR06-2M □□□071C32	498

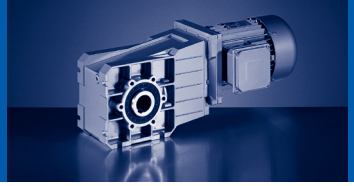

50 Hz: P_N=0.37 kW
60 Hz: P_N=0.45 kW
87 Hz: P_N=0.66 kW

n_N	1410 r/min		1710 r/min		2520 r/min		M_2 [Nm]	i		
f_N	50 Hz		60 Hz		87 Hz					
P_N	0.37 kW		0.45 kW		0.66 kW					
	n_2 [r/min]	c	n_2 [r/min]	c	n_2 [r/min]	c				
	27	1.9	33	1.9	48	1.9	125	52.510	GKR05-2M □□□071C32	498
	24	1.7	29	1.7	42	1.7	142	59.630	GKR05-2M □□□071C32	498
	23	2.2	27	2.2	40	2.2	149	62.500	GKR06-2M □□□071C32	498
	21	2.2	25	2.2	37	2.2	164	68.906	GKR06-2M □□□071C32	498

50 Hz: P_N=0.37 kW
60 Hz: P_N=0.45 kW

n_N	950 r/min		1150 r/min				M_2 [Nm]	i		
f_N	50 Hz		60 Hz							
P_N	0.37 kW		0.45 kW							
	n_2 [r/min]	c	n_2 [r/min]	c						
	183	3.8	222	3.8			18	5.185	GKR04-2M □□□080C13	498
	159	3.4	193	3.4			21	5.963	GKR04-2M □□□080C13	498
	152	5.7	184	5.7			22	6.257	GKR05-2M □□□080C13	498
	134	3.1	162	3.1			25	7.111	GKR04-2M □□□080C13	498
	116	2.8	141	2.8			29	8.178	GKR04-2M □□□080C13	498
	104	2.6	126	2.6			32	9.101	GKR04-2M □□□080C13	498
	91	2.4	110	2.4			37	10.466	GKR04-2M □□□080C13	498
	83	2.2	100	2.2			41	11.449	GKR04-2M □□□080C13	498
	75	2.0	91	2.0			45	12.698	GKR04-2M □□□080C13	498
	72	4.6	87	4.6			47	13.216	GKR05-2M □□□080C13	498
	65	1.7	79	1.7			52	14.603	GKR04-2M □□□080C13	498
	63	4.2	77	4.2			53	15.008	GKR05-2M □□□080C13	498
	61	1.6	74	1.6			55	15.556	GKR04-2M □□□080C13	498
	53	1.4	64	1.4			63	17.889	GKR04-2M □□□080C13	498
	49	1.3	59	1.3			69	19.556	GKR04-2M □□□080C13	498
	42	1.1	51	1.1			80	22.489	GKR04-2M □□□080C13	498
	41	2.9	49	2.9			83	23.450	GKR05-2M □□□080C13	498
	38	1.0	46	1.0			89	25.185	GKR04-2M □□□080C13	498
	35	2.5	43	2.5			95	26.878	GKR05-2M □□□080C13	498
	33	0.9	40	0.9			102	28.963	GKR04-2M □□□080C13	498
	31	2.2	38	2.2			108	30.522	GKR05-2M □□□080C13	498
	30	4.0	37	4.0			111	31.481	GKR06-2M □□□080C13	498
	28	2.0	34	2.0			118	33.433	GKR05-2M □□□080C13	498
	25	1.8	30	1.8			134	37.967	GKR05-2M □□□080C13	498
	23	3.1	28	3.1			144	40.741	GKR06-2M □□□080C13	498
	22	1.6	27	1.6			153	43.267	GKR05-2M □□□080C13	498
	21	2.8	26	2.8			159	44.917	GKR06-2M □□□080C13	498
	19	1.4	23	1.4			174	49.133	GKR05-2M □□□080C13	498
	19	2.6	23	2.6			175	49.444	GKR06-2M □□□080C13	498
	18	1.3	22	1.3			186	52.510	GKR05-2M □□□080C13	498
	16	1.1	19	1.1			211	59.630	GKR05-2M □□□080C13	498
	15	1.7	18	1.7			221	62.500	GKR06-2M □□□080C13	498
	14	1.7	17	1.7			244	68.906	GKR06-2M □□□080C13	498

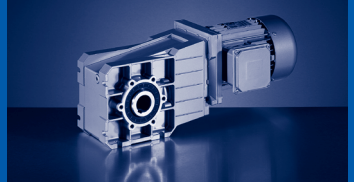

50 Hz: P_N=0.55 kW
60 Hz: P_N=0.68 kW

n_N	2630 r/min		3230 r/min				M_2 [Nm]	i		
f_N	50 Hz		60 Hz							
P_N	0.55 kW		0.68 kW							
	n_2 [r/min]	c	n_2 [r/min]	c						
	507	4.1	623	3.8			10	5.185	GKR04-2M □□□071C31	498
	441	4.1	542	3.8			11	5.963	GKR04-2M □□□071C31	498
	370	4.1	454	3.8			14	7.111	GKR04-2M □□□071C31	498
	322	4.1	395	3.8			16	8.178	GKR04-2M □□□071C31	498
	289	4.1	355	3.8			17	9.101	GKR04-2M □□□071C31	498
	251	3.7	309	3.5			20	10.466	GKR04-2M □□□071C31	498
	230	3.4	282	3.2			22	11.449	GKR04-2M □□□071C31	498
	207	3.1	254	2.9			24	12.698	GKR04-2M □□□071C31	498
	199	4.1	244	3.8			25	13.216	GKR05-2M □□□071C31	498
	180	2.7	221	2.5			28	14.603	GKR04-2M □□□071C31	498
	175	4.1	215	3.8			29	15.008	GKR05-2M □□□071C31	498
	169	2.5	208	2.4			30	15.556	GKR04-2M □□□071C31	498
	147	2.2	181	2.1			34	17.889	GKR04-2M □□□071C31	498
	135	2.0	165	1.9			37	19.556	GKR04-2M □□□071C31	498
	117	1.8	144	1.6			43	22.489	GKR04-2M □□□071C31	498
	104	1.8	128	1.7			48	25.185	GKR04-2M □□□071C31	498
	91	1.5	112	1.4			55	28.963	GKR04-2M □□□071C31	498
	86	3.9	106	3.7			58	30.522	GKR05-2M □□□071C31	498
	82	1.4	101	1.3			61	31.919	GKR04-2M □□□071C31	498
	72	1.2	88	1.1			70	36.707	GKR04-2M □□□071C31	498
	69	3.1	85	2.9			72	37.967	GKR05-2M □□□071C31	498
	66	1.1	81	1.0			76	40.000	GKR04-2M □□□071C31	498
	61	2.9	75	2.9			82	43.267	GKR05-2M □□□071C31	498
	57	1.0	70	1.0			87	46.000	GKR04-2M □□□071C31	498
	54	2.6	66	2.5			93	49.133	GKR05-2M □□□071C31	498
	50	2.4	62	2.4			100	52.510	GKR05-2M □□□071C31	498
	44	2.1	54	2.1			113	59.630	GKR05-2M □□□071C31	498
	42	2.8	52	2.8			119	62.500	GKR06-2M □□□071C31	498
	38	2.8	47	2.8			131	68.906	GKR06-2M □□□071C31	498

50 Hz: P_N=0.55 kW
60 Hz: P_N=0.68 kW
87 Hz: P_N=1.0 kW

n_N	1405 r/min		1705 r/min		2515 r/min		M_2 [Nm]	i		
f_N	50 Hz		60 Hz		87 Hz					
P_N	0.55 kW		0.68 kW		1.0 kW					
	n_2 [r/min]	c	n_2 [r/min]	c	n_2 [r/min]	c				
	271	3.7	329	3.6	485	3.2	18	5.185	GKR04-2M □□□071C42	498
	260	2.1	315	2.0	465	1.7	19	5.411	GKR03-2M □□□071C42	498
	236	3.4	286	3.3	422	2.9	21	5.963	GKR04-2M □□□071C42	498
	226	1.8	274	1.8	404	1.5	22	6.222	GKR03-2M □□□071C42	498
	225	4.5	273	4.3	402	3.8	22	6.257	GKR05-2M □□□071C42	498
	198	1.7	240	1.6	354	1.4	25	7.111	GKR03-2M □□□071C42	498
	198	3.1	240	2.9	354	2.6	25	7.111	GKR04-2M □□□071C42	498
	172	1.5	209	1.5	308	1.3	29	8.178	GKR03-2M □□□071C42	498
	172	2.8	209	2.7	308	2.4	29	8.178	GKR04-2M □□□071C42	498
	154	1.4	187	1.3	276	1.2	32	9.101	GKR03-2M □□□071C42	498
	154	2.6	187	2.5	276	2.2	32	9.101	GKR04-2M □□□071C42	498
	134	1.2	163	1.2	240	1.0	37	10.466	GKR03-2M □□□071C42	498
	134	2.4	163	2.3	240	2.0	37	10.466	GKR04-2M □□□071C42	498
	123	2.2	149	2.1	220	1.9	41	11.449	GKR04-2M □□□071C42	498
	121	1.1	147	1.0	216	0.9	41	11.640	GKR03-2M □□□071C42	498
	111	2.0	134	1.9	198	1.7	45	12.698	GKR04-2M □□□071C42	498
	106	4.5	129	4.3	190	3.8	47	13.216	GKR05-2M □□□071C42	498
	105	1.0	127	0.9			48	13.386	GKR03-2M □□□071C42	498
	96	1.7	117	1.7	172	1.5	52	14.603	GKR04-2M □□□071C42	498
	94	4.2	114	4.0	168	3.5	53	15.008	GKR05-2M □□□071C42	498
	93	0.8	113	0.8			54	15.111	GKR03-2M □□□071C42	498
	90	1.6	110	1.6	162	1.4	55	15.556	GKR04-2M □□□071C42	498
	79	1.4	95	1.4	141	1.2	64	17.889	GKR04-2M □□□071C42	498
	72	1.3	87	1.2	129	1.1	69	19.556	GKR04-2M □□□071C42	498
	63	1.1	76	1.1	112	1.0	80	22.489	GKR04-2M □□□071C42	498
	60	2.9	73	2.8	107	2.4	83	23.450	GKR05-2M □□□071C42	498
	56	1.0	68	1.0	100	1.0	89	25.185	GKR04-2M □□□071C42	498
	52	2.5	63	2.5	94	2.4	96	26.878	GKR05-2M □□□071C42	498
	49	0.9	59	0.9	87	0.8	103	28.963	GKR04-2M □□□071C42	498
	46	2.2	56	2.2	82	2.1	108	30.522	GKR05-2M □□□071C42	498
	45	3.2	54	3.2	80	3.0	112	31.481	GKR06-2M □□□071C42	498
	42	2.0	51	2.0	75	1.9	119	33.433	GKR05-2M □□□071C42	498
	41	3.2	49	3.2	73	3.0	123	34.708	GKR06-2M □□□071C42	498
	37	1.8	45	1.8	66	1.7	135	37.967	GKR05-2M □□□071C42	498
	35	2.9	42	2.9	62	2.9	145	40.741	GKR06-2M □□□071C42	498
	33	1.6	39	1.6	58	1.6	154	43.267	GKR05-2M □□□071C42	498
	31	2.8	38	2.8	56	2.8	160	44.917	GKR06-2M □□□071C42	498
	29	1.4	35	1.4	51	1.4	175	49.133	GKR05-2M □□□071C42	498
	28	2.4	35	2.4	51	2.4	176	49.444	GKR06-2M □□□071C42	498
	27	1.3	33	1.3	48	1.3	187	52.510	GKR05-2M □□□071C42	498
	24	1.1	29	1.1	42	1.1	212	59.630	GKR05-2M □□□071C42	498

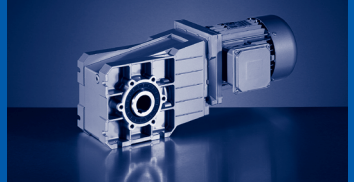

50 Hz: P_N=0.55 kW
60 Hz: P_N=0.68 kW
87 Hz: P_N=1.0 kW

n_N	1405 r/min		1705 r/min		2515 r/min		M_2 [Nm]	i		
f_N	50 Hz		60 Hz		87 Hz					
P_N	0.55 kW		0.68 kW		1.0 kW					
	n_2 [r/min]	c	n_2 [r/min]	c	n_2 [r/min]	c				
	23	1.4	27	1.4	40	1.4	222	62.500	GKR06-2M □□□071C42	498
	20	1.4	25	1.4	37	1.4	245	68.906	GKR06-2M □□□071C42	498

50 Hz: P_N=0.55 kW
60 Hz: P_N=0.66 kW

n_N	930 r/min		1130 r/min				M_2 [Nm]	i		
f_N	50 Hz		60 Hz							
P_N	0.55 kW		0.66 kW							
	n_2 [r/min]	c	n_2 [r/min]	c						
	179	2.5	218	2.5			28	5.185	GKR04-2M □□□080C33	498
	156	2.3	190	2.3			32	5.963	GKR04-2M □□□080C33	498
	149	3.7	181	3.7			34	6.257	GKR05-2M □□□080C33	498
	131	2.0	159	2.0			38	7.111	GKR04-2M □□□080C33	498
	114	1.9	138	1.9			44	8.178	GKR04-2M □□□080C33	498
	102	1.7	124	1.7			49	9.101	GKR04-2M □□□080C33	498
	89	1.6	108	1.6			56	10.466	GKR04-2M □□□080C33	498
	81	1.5	99	1.5			61	11.449	GKR04-2M □□□080C33	498
	77	3.2	94	3.2			65	12.081	GKR05-2M □□□080C33	498
	73	1.3	89	1.3			68	12.698	GKR04-2M □□□080C33	498
	70	3.0	86	3.0			71	13.216	GKR05-2M □□□080C33	498
	68	2.9	82	2.9			74	13.719	GKR05-2M □□□080C33	498
	64	1.2	77	1.2			78	14.603	GKR04-2M □□□080C33	498
	62	2.8	75	2.8			81	15.008	GKR05-2M □□□080C33	498
	60	1.1	73	1.1			84	15.556	GKR04-2M □□□080C33	498
	55	2.7	67	2.7			90	16.857	GKR05-2M □□□080C33	498
	52	0.9	63	0.9			96	17.889	GKR04-2M □□□080C33	498
	49	2.3	59	2.3			103	19.143	GKR05-2M □□□080C33	498
	48	0.9	58	0.9			105	19.556	GKR04-2M □□□080C33	498
	45	2.2	55	2.2			111	20.650	GKR05-2M □□□080C33	498
	40	1.9	48	1.9			126	23.450	GKR05-2M □□□080C33	498
	37	3.1	45	3.1			136	25.309	GKR06-2M □□□080C33	498
	35	1.7	42	1.7			144	26.878	GKR05-2M □□□080C33	498
	33	3.0	41	3.0			150	27.903	GKR06-2M □□□080C33	498
	31	1.5	37	1.5			164	30.522	GKR05-2M □□□080C33	498
	30	2.6	36	2.6			169	31.481	GKR06-2M □□□080C33	498
	28	1.3	34	1.3			179	33.433	GKR05-2M □□□080C33	498
	27	2.4	33	2.4			186	34.708	GKR06-2M □□□080C33	498
	25	1.2	30	1.2			204	37.967	GKR05-2M □□□080C33	498
	23	2.1	28	2.1			219	40.741	GKR06-2M □□□080C33	498
	22	1.0	26	1.0			232	43.267	GKR05-2M □□□080C33	498
	21	1.9	25	1.9			241	44.917	GKR06-2M □□□080C33	498
	19	0.9	23	0.9			264	49.133	GKR05-2M □□□080C33	498
	19	1.7	23	1.7			265	49.444	GKR06-2M □□□080C33	498
	18	0.9	22	0.9			282	52.510	GKR05-2M □□□080C33	498
	15	1.1	18	1.1			335	62.500	GKR06-2M □□□080C33	498
	14	1.1	16	1.1			370	68.906	GKR06-2M □□□080C33	498

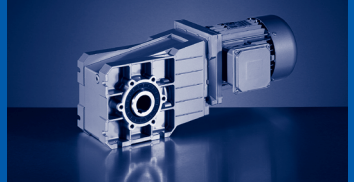

50 Hz: P_N=0.75 kW
60 Hz: P_N=0.92 kW

n_N	2720 r/min		3320 r/min				M_2 [Nm]	i		
f_N	50 Hz		60 Hz							
P_N	0.75 kW		0.92 kW							
	n_2 [r/min]	c	n_2 [r/min]	c						
	525	4.4	640	4.1			13	5.185	GKR04-2M □□□080C11	498
	456	4.0	557	3.7			15	5.963	GKR04-2M □□□080C11	498
	383	3.6	467	3.3			18	7.111	GKR04-2M □□□080C11	498
	333	3.3	406	3.0			21	8.178	GKR04-2M □□□080C11	498
	299	3.0	365	2.9			23	9.101	GKR04-2M □□□080C11	498
	260	2.8	317	2.6			26	10.466	GKR04-2M □□□080C11	498
	238	2.6	290	2.4			29	11.449	GKR04-2M □□□080C11	498
	214	2.3	262	2.2			32	12.698	GKR04-2M □□□080C11	498
	206	5.3	251	5.0			33	13.216	GKR05-2M □□□080C11	498
	186	2.0	227	1.9			37	14.603	GKR04-2M □□□080C11	498
	181	4.9	221	4.6			38	15.008	GKR05-2M □□□080C11	498
	175	1.9	213	1.8			39	15.556	GKR04-2M □□□080C11	498
	152	1.7	186	1.5			45	17.889	GKR04-2M □□□080C11	498
	139	1.5	170	1.4			49	19.556	GKR04-2M □□□080C11	498
	121	1.3	148	1.2			56	22.489	GKR04-2M □□□080C11	498
	108	1.3	132	1.3			63	25.185	GKR04-2M □□□080C11	498
	94	1.2	115	1.1			73	28.963	GKR04-2M □□□080C11	498
	89	2.9	109	2.7			76	30.522	GKR05-2M □□□080C11	498
	86	5.2	106	4.9			79	31.481	GKR06-2M □□□080C11	498
	81	2.7	99	2.5			84	33.433	GKR05-2M □□□080C11	498
	72	2.4	87	2.2			95	37.967	GKR05-2M □□□080C11	498
	63	2.2	77	2.1			108	43.267	GKR05-2M □□□080C11	498
	55	2.0	68	1.9			123	49.133	GKR05-2M □□□080C11	498
	52	1.8	63	1.8			131	52.510	GKR05-2M □□□080C11	498
	46	1.6	56	1.6			149	59.630	GKR05-2M □□□080C11	498
	44	2.4	53	2.3			156	62.500	GKR06-2M □□□080C11	498
	40	2.4	48	2.3			172	68.906	GKR06-2M □□□080C11	498

50 Hz: P_N=0.75 kW
60 Hz: P_N=0.92 kW
87 Hz: P_N=1.35 kW

n_N	1410 r/min		1710 r/min		2520 r/min		M_2 [Nm]	i		
f_N	50 Hz		60 Hz		87 Hz					
P_N	0.75 kW		0.92 kW		1.35 kW					
	n_2 [r/min]	c	n_2 [r/min]	c	n_2 [r/min]	c				
	272	2.8	330	2.6	486	2.3	25	5.185	GKR04-2M □□□080C32	498
	237	2.5	287	2.4	423	2.1	29	5.963	GKR04-2M □□□080C32	498
	225	4.1	273	4.0	403	3.5	30	6.257	GKR05-2M □□□080C32	498
	198	2.3	241	2.2	354	1.9	34	7.111	GKR04-2M □□□080C32	498
	172	2.1	209	2.0	308	1.7	40	8.178	GKR04-2M □□□080C32	498
	155	1.9	188	1.8	277	1.6	44	9.101	GKR04-2M □□□080C32	498
	135	1.8	163	1.7	241	1.5	51	10.466	GKR04-2M □□□080C32	498
	123	1.6	149	1.6	220	1.4	55	11.449	GKR04-2M □□□080C32	498
	111	1.5	135	1.4	198	1.2	61	12.698	GKR04-2M □□□080C32	498
	107	3.4	129	3.2	191	2.8	64	13.216	GKR05-2M □□□080C32	498
	97	1.3	117	1.2	173	1.1	71	14.603	GKR04-2M □□□080C32	498
	94	3.1	114	3.0	168	2.6	72	15.008	GKR05-2M □□□080C32	498
	91	1.2	110	1.2	162	1.0	75	15.556	GKR04-2M □□□080C32	498
	84	3.0	101	2.8	150	2.5	81	16.857	GKR05-2M □□□080C32	498
	79	1.0	96	1.0	141	0.9	86	17.889	GKR04-2M □□□080C32	498
	74	2.6	89	2.5	132	2.2	92	19.143	GKR05-2M □□□080C32	498
	72	1.0	87	0.9	129	0.8	94	19.556	GKR04-2M □□□080C32	498
	68	2.4	83	2.3	122	2.0	100	20.650	GKR05-2M □□□080C32	498
	63	0.8					109	22.489	GKR04-2M □□□080C32	498
	60	2.1	73	2.0	108	1.8	113	23.450	GKR05-2M □□□080C32	498
	53	1.9	64	1.9	94	1.8	130	26.878	GKR05-2M □□□080C32	498
	51	3.3	61	3.3	90	3.2	135	27.903	GKR06-2M □□□080C32	498
	46	1.6	56	1.6	83	1.6	147	30.522	GKR05-2M □□□080C32	498
	45	2.9	54	2.9	80	2.8	152	31.481	GKR06-2M □□□080C32	498
	42	1.5	51	1.5	75	1.4	161	33.433	GKR05-2M □□□080C32	498
	41	2.7	49	2.7	73	2.6	168	34.708	GKR06-2M □□□080C32	498
	37	1.3	45	1.3	66	1.3	183	37.967	GKR05-2M □□□080C32	498
	35	2.3	42	2.3	62	2.3	197	40.741	GKR06-2M □□□080C32	498
	33	1.2	40	1.2	58	1.2	209	43.267	GKR05-2M □□□080C32	498
	31	2.1	38	2.1	56	2.1	217	44.917	GKR06-2M □□□080C32	498
	29	1.0	35	1.0	51	1.0	237	49.133	GKR05-2M □□□080C32	498
	29	1.9	35	1.9	51	1.9	239	49.444	GKR06-2M □□□080C32	498
	27	1.0	33	1.0	48	1.0	253	52.510	GKR05-2M □□□080C32	498
	24	0.8	29	0.8	42	0.8	288	59.630	GKR05-2M □□□080C32	498
	23	1.3	27	1.3	40	1.3	302	62.500	GKR06-2M □□□080C32	498
	21	1.3	25	1.3	37	1.3	333	68.906	GKR06-2M □□□080C32	498

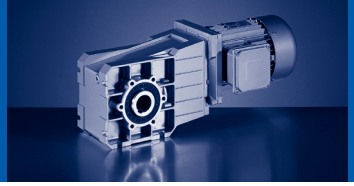

50 Hz: P_N=1.1 kW
60 Hz: P_N=1.3 kW

n_N	2720 r/min		3320 r/min				M_2 [Nm]	i		
f_N	50 Hz		60 Hz							
P_N	1.1 kW		1.3 kW							
	n_2 [r/min]	c	n_2 [r/min]	c						
	525	3.0	640	2.8			19	5.185	GKR04-2M □□□080C31	498
	456	2.7	557	2.5			22	5.963	GKR04-2M □□□080C31	498
	435	4.5	531	4.2			23	6.257	GKR05-2M □□□080C31	498
	383	2.4	467	2.3			26	7.111	GKR04-2M □□□080C31	498
	333	2.2	406	2.1			30	8.178	GKR04-2M □□□080C31	498
	299	2.1	365	1.9			33	9.101	GKR04-2M □□□080C31	498
	260	1.9	317	1.8			38	10.466	GKR04-2M □□□080C31	498
	238	1.8	290	1.6			42	11.449	GKR04-2M □□□080C31	498
	214	1.6	262	1.5			47	12.698	GKR04-2M □□□080C31	498
	206	3.6	251	3.4			49	13.216	GKR05-2M □□□080C31	498
	186	1.4	227	1.3			54	14.603	GKR04-2M □□□080C31	498
	181	3.3	221	3.1			55	15.008	GKR05-2M □□□080C31	498
	175	1.3	213	1.2			57	15.556	GKR04-2M □□□080C31	498
	161	3.2	197	3.0			62	16.857	GKR05-2M □□□080C31	498
	152	1.1	186	1.1			66	17.889	GKR04-2M □□□080C31	498
	142	2.8	173	2.6			70	19.143	GKR05-2M □□□080C31	498
	139	1.0	170	1.0			72	19.556	GKR04-2M □□□080C31	498
	132	2.6	161	2.4			76	20.650	GKR05-2M □□□080C31	498
	121	0.9	148	0.8			83	22.489	GKR04-2M □□□080C31	498
	116	2.3	142	2.1			86	23.450	GKR05-2M □□□080C31	498
	108	0.9	132	0.9			92	25.185	GKR04-2M □□□080C31	498
	101	2.3	124	2.1			99	26.878	GKR05-2M □□□080C31	498
	98	4.1	119	3.8			102	27.903	GKR06-2M □□□080C31	498
	89	2.0	109	1.9			112	30.522	GKR05-2M □□□080C31	498
	86	3.6	106	3.3			116	31.481	GKR06-2M □□□080C31	498
	81	1.8	99	1.7			123	33.433	GKR05-2M □□□080C31	498
	72	1.6	87	1.5			139	37.967	GKR05-2M □□□080C31	498
	67	3.0	82	2.9			150	40.741	GKR06-2M □□□080C31	498
	63	1.5	77	1.5			159	43.267	GKR05-2M □□□080C31	498
	61	2.7	74	2.6			165	44.917	GKR06-2M □□□080C31	498
	55	1.3	68	1.3			180	49.133	GKR05-2M □□□080C31	498
	55	2.5	67	2.4			181	49.444	GKR06-2M □□□080C31	498
	52	1.3	63	1.2			193	52.510	GKR05-2M □□□080C31	498
	46	1.1	56	1.1			219	59.630	GKR05-2M □□□080C31	498
	44	1.7	53	1.6			229	62.500	GKR06-2M □□□080C31	498
	40	1.7	48	1.6			253	68.906	GKR06-2M □□□080C31	498

50 Hz: P_N=1.1 kW
60 Hz: P_N=1.3 kW
87 Hz: P_N=2.0 kW

n_N	1390 r/min		1690 r/min		2500 r/min		M_2 [Nm]	i		
f_N	50 Hz		60 Hz		87 Hz					
P_N	1.1 kW		1.3 kW		2.0 kW					
	n_2 [r/min]	c	n_2 [r/min]	c	n_2 [r/min]	c				
	390	4.5	474	4.3	701	3.8	26	3.565	GKR05-2M □□□080C42	498
	268	1.9	326	1.8	482	1.6	37	5.185	GKR04-2M □□□080C42	498
	233	1.7	283	1.6	419	1.4	43	5.963	GKR04-2M □□□080C42	498
	222	3.5	270	3.3	400	2.9	45	6.257	GKR05-2M □□□080C42	498
	196	1.5	238	1.5	352	1.3	51	7.111	GKR04-2M □□□080C42	498
	170	1.4	207	1.3	306	1.2	59	8.178	GKR04-2M □□□080C42	498
	153	1.3	186	1.2	275	1.1	65	9.101	GKR04-2M □□□080C42	498
	147	2.8	179	2.7	265	2.4	68	9.440	GKR05-2M □□□080C42	498
	133	1.2	162	1.1	239	1.0	75	10.466	GKR04-2M □□□080C42	498
	130	2.6	158	2.5	233	2.2	77	10.720	GKR05-2M □□□080C42	498
	121	1.1	148	1.1	218	0.9	82	11.449	GKR04-2M □□□080C42	498
	115	2.4	140	2.3	207	2.0	87	12.081	GKR05-2M □□□080C42	498
	110	1.0	133	1.0	197	0.8	91	12.698	GKR04-2M □□□080C42	498
	105	2.3	128	2.2	189	1.9	95	13.216	GKR05-2M □□□080C42	498
	101	2.2	123	2.1	182	1.9	99	13.719	GKR05-2M □□□080C42	498
	95	0.9	116	0.8			105	14.603	GKR04-2M □□□080C42	498
	93	2.1	113	2.0	167	1.8	108	15.008	GKR05-2M □□□080C42	498
	89	0.8					112	15.556	GKR04-2M □□□080C42	498
	83	2.0	100	1.9	148	1.7	121	16.857	GKR05-2M □□□080C42	498
	73	1.8	88	1.7	131	1.5	137	19.143	GKR05-2M □□□080C42	498
	72	3.2	87	3.1	129	2.7	140	19.444	GKR06-2M □□□080C42	498
	67	1.6	82	1.6	121	1.4	148	20.650	GKR05-2M □□□080C42	498
	65	2.9	79	2.8	117	2.5	154	21.438	GKR06-2M □□□080C42	498
	59	1.4	72	1.4	107	1.2	168	23.450	GKR05-2M □□□080C42	498
	55	2.5	67	2.5	99	2.4	182	25.309	GKR06-2M □□□080C42	498
	52	1.2	63	1.2	93	1.2	193	26.878	GKR05-2M □□□080C42	498
	50	2.3	61	2.3	90	2.2	200	27.903	GKR06-2M □□□080C42	498
	46	1.1	55	1.1	82	1.1	219	30.522	GKR05-2M □□□080C42	498
	44	2.0	54	2.0	79	1.9	226	31.481	GKR06-2M □□□080C42	498
	42	1.0	51	1.0	75	1.0	240	33.433	GKR05-2M □□□080C42	498
	40	1.8	49	1.8	72	1.7	249	34.708	GKR06-2M □□□080C42	498
	37	0.9	45	0.9	66	0.8	273	37.967	GKR05-2M □□□080C42	498
	34	1.5	42	1.5	61	1.5	293	40.741	GKR06-2M □□□080C42	498
	31	1.4	38	1.4	56	1.4	323	44.917	GKR06-2M □□□080C42	498
	28	1.3	34	1.3	51	1.3	355	49.444	GKR06-2M □□□080C42	498

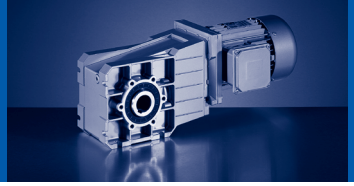

50 Hz: P_N=1.5 kW
60 Hz: P_N=1.8 kW

n_N	2710 r/min		3310 r/min				M_2 [Nm]	i		
f_N	50 Hz		60 Hz							
P_N	1.5 kW		1.8 kW							
	n_2 [r/min]	c	n_2 [r/min]	c						
	523	2.2	638	2.0			26	5.185	GKR04-2M □□□090C11	498
	455	2.0	555	1.9			30	5.963	GKR04-2M □□□090C11	498
	433	4.1	529	3.8			31	6.257	GKR05-2M □□□090C11	498
	381	1.8	466	1.7			36	7.111	GKR04-2M □□□090C11	498
	331	1.6	405	1.5			41	8.178	GKR04-2M □□□090C11	498
	298	1.5	364	1.4			46	9.101	GKR04-2M □□□090C11	498
	259	1.4	316	1.3			53	10.466	GKR04-2M □□□090C11	498
	253	3.1	309	2.9			54	10.720	GKR05-2M □□□090C11	498
	237	1.3	289	1.2			58	11.449	GKR04-2M □□□090C11	498
	224	2.8	274	2.6			61	12.081	GKR05-2M □□□090C11	498
	213	1.2	261	1.1			64	12.698	GKR04-2M □□□090C11	498
	205	2.7	251	2.5			66	13.216	GKR05-2M □□□090C11	498
	198	2.6	241	2.4			69	13.719	GKR05-2M □□□090C11	498
	186	1.0	227	0.9			73	14.603	GKR04-2M □□□090C11	498
	181	2.4	221	2.3			75	15.008	GKR05-2M □□□090C11	498
	174	1.0	213	0.9			78	15.556	GKR04-2M □□□090C11	498
	161	2.3	196	2.2			85	16.857	GKR05-2M □□□090C11	498
	152	0.8					90	17.889	GKR04-2M □□□090C11	498
	142	2.1	173	1.9			96	19.143	GKR05-2M □□□090C11	498
	131	1.9	160	1.8			104	20.650	GKR05-2M □□□090C11	498
	116	1.7	141	1.6			118	23.450	GKR05-2M □□□090C11	498
	101	1.7	123	1.6			135	26.878	GKR05-2M □□□090C11	498
	97	3.0	119	2.8			140	27.903	GKR06-2M □□□090C11	498
	89	1.5	108	1.4			153	30.522	GKR05-2M □□□090C11	498
	86	2.7	105	2.5			158	31.481	GKR06-2M □□□090C11	498
	81	1.3	99	1.3			168	33.433	GKR05-2M □□□090C11	498
	78	2.4	95	2.3			174	34.708	GKR06-2M □□□090C11	498
	71	1.2	87	1.1			191	37.967	GKR05-2M □□□090C11	498
	67	2.2	81	2.1			205	40.741	GKR06-2M □□□090C11	498
	60	2.0	74	1.9			226	44.917	GKR06-2M □□□090C11	498
	55	1.8	67	1.8			248	49.444	GKR06-2M □□□090C11	498

50 Hz: P_N=1.5 kW
60 Hz: P_N=1.8 kW
87 Hz: P_N=2.7 kW

n_N	1410 r/min		1710 r/min		2520 r/min		M_2 [Nm]	i		
f_N	50 Hz		60 Hz		87 Hz					
P_N	1.5 kW		1.8 kW		2.7 kW					
	n_2 [r/min]	c	n_2 [r/min]	c	n_2 [r/min]	c				
	391	4.0	476	3.8	703	3.3	35	3.565	GKR05-2M □□□090C32	498
	285	3.1	347	3.0	512	2.6	48	4.889	GKR05-2M □□□090C32	498
	269	1.4	327	1.3	483	1.2	51	5.185	GKR04-2M □□□090C32	498
	234	1.2	284	1.2	420	1.1	58	5.963	GKR04-2M □□□090C32	498
	223	2.6	271	2.5	400	2.2	61	6.257	GKR05-2M □□□090C32	498
	203	2.7	246	2.6	364	2.3	67	6.883	GKR05-2M □□□090C32	498
	196	1.1	238	1.1	352	0.9	69	7.111	GKR04-2M □□□090C32	498
	179	2.5	217	2.4	321	2.1	76	7.817	GKR05-2M □□□090C32	498
	171	1.0	207	1.0	306	0.9	80	8.178	GKR04-2M □□□090C32	498
	153	1.0	186	0.9	275	0.8	89	9.101	GKR04-2M □□□090C32	498
	148	2.1	180	2.0	265	1.8	92	9.440	GKR05-2M □□□090C32	498
	133	0.9	162	0.8			102	10.466	GKR04-2M □□□090C32	498
	130	2.0	158	1.9	234	1.6	105	10.720	GKR05-2M □□□090C32	498
	122	0.8					112	11.449	GKR04-2M □□□090C32	498
	116	1.8	140	1.7	207	1.5	118	12.081	GKR05-2M □□□090C32	498
	106	1.7	128	1.6	190	1.4	129	13.216	GKR05-2M □□□090C32	498
	102	1.6	124	1.6	183	1.4	134	13.719	GKR05-2M □□□090C32	498
	102	3.2	124	3.1	183	2.7	134	13.720	GKR06-2M □□□090C32	498
	93	1.5	113	1.5	167	1.3	146	15.008	GKR05-2M □□□090C32	498
	88	2.9	107	2.8	158	2.5	155	15.873	GKR06-2M □□□090C32	498
	83	1.5	101	1.4	149	1.2	164	16.857	GKR05-2M □□□090C32	498
	80	2.6	97	2.5	143	2.2	171	17.500	GKR06-2M □□□090C32	498
	73	1.3	89	1.2	131	1.1	187	19.143	GKR05-2M □□□090C32	498
	72	2.4	87	2.3	129	2.0	190	19.444	GKR06-2M □□□090C32	498
	68	1.2	82	1.1	121	1.0	201	20.650	GKR05-2M □□□090C32	498
	65	2.2	79	2.1	117	1.8	209	21.438	GKR06-2M □□□090C32	498
	60	1.1	72	1.0	107	0.9	229	23.450	GKR05-2M □□□090C32	498
	55	1.8	67	1.8	99	1.8	247	25.309	GKR06-2M □□□090C32	498
	52	0.9	63	0.9	93	0.9	262	26.878	GKR05-2M □□□090C32	498
	50	1.7	61	1.7	90	1.6	272	27.903	GKR06-2M □□□090C32	498
	46	0.8	56	0.8			298	30.522	GKR05-2M □□□090C32	498
	44	1.5	54	1.5	80	1.4	307	31.481	GKR06-2M □□□090C32	498
	40	1.3	49	1.3	72	1.3	339	34.708	GKR06-2M □□□090C32	498
	34	1.1	42	1.1	62	1.1	397	40.741	GKR06-2M □□□090C32	498
	31	1.0	38	1.0	56	1.0	438	44.917	GKR06-2M □□□090C32	498
	28	0.9	34	0.9	51	0.9	482	49.444	GKR06-2M □□□090C32	498

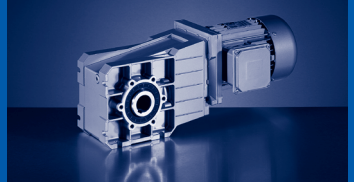

50 Hz: P_N=2.2 kW
60 Hz: P_N=2.6 kW

n_N	2730 r/min		3330 r/min				M_2 [Nm]	i		
f_N	50 Hz		60 Hz							
P_N	2.2 kW		2.6 kW							
	n_2 [r/min]	c	n_2 [r/min]	c						
	766	4.3	934	4.1			26	3.565	GKR05-2M □□□090C31	498
	527	1.5	642	1.4			38	5.185	GKR04-2M □□□090C31	498
	458	1.4	558	1.3			44	5.963	GKR04-2M □□□090C31	498
	436	2.8	532	2.6			46	6.257	GKR05-2M □□□090C31	498
	397	2.9	484	2.7			50	6.883	GKR05-2M □□□090C31	498
	384	1.2	468	1.1			52	7.111	GKR04-2M □□□090C31	498
	349	2.7	426	2.5			57	7.817	GKR05-2M □□□090C31	498
	334	1.1	407	1.0			60	8.178	GKR04-2M □□□090C31	498
	300	1.0	366	1.0			67	9.101	GKR04-2M □□□090C31	498
	289	2.3	353	2.1			69	9.440	GKR05-2M □□□090C31	498
	261	1.0	318	0.9			77	10.466	GKR04-2M □□□090C31	498
	255	2.1	311	2.0			78	10.720	GKR05-2M □□□090C31	498
	239	0.9	291	0.8			84	11.449	GKR04-2M □□□090C31	498
	226	1.9	276	1.8			88	12.081	GKR05-2M □□□090C31	498
	207	1.8	252	1.7			97	13.216	GKR05-2M □□□090C31	498
	199	1.8	243	1.7			100	13.719	GKR05-2M □□□090C31	498
	182	1.7	222	1.6			110	15.008	GKR05-2M □□□090C31	498
	172	3.2	210	3.0			116	15.873	GKR06-2M □□□090C31	498
	162	1.6	198	1.5			123	16.857	GKR05-2M □□□090C31	498
	156	2.9	190	2.7			128	17.500	GKR06-2M □□□090C31	498
	143	1.4	174	1.3			140	19.143	GKR05-2M □□□090C31	498
	140	2.6	171	2.4			142	19.444	GKR06-2M □□□090C31	498
	132	1.3	161	1.2			151	20.650	GKR05-2M □□□090C31	498
	127	2.4	155	2.2			157	21.438	GKR06-2M □□□090C31	498
	116	1.2	142	1.1			171	23.450	GKR05-2M □□□090C31	498
	108	2.3	132	2.1			185	25.309	GKR06-2M □□□090C31	498
	102	1.1	124	1.1			197	26.878	GKR05-2M □□□090C31	498
	98	2.1	119	1.9			204	27.903	GKR06-2M □□□090C31	498
	89	1.0	109	0.9			223	30.522	GKR05-2M □□□090C31	498
	87	1.8	106	1.7			230	31.481	GKR06-2M □□□090C31	498
	82	0.9	100	0.9			244	33.433	GKR05-2M □□□090C31	498
	79	1.7	96	1.5			254	34.708	GKR06-2M □□□090C31	498
	72	0.8					278	37.967	GKR05-2M □□□090C31	498
	67	1.5	82	1.5			298	40.741	GKR06-2M □□□090C31	498
	61	1.4	74	1.3			328	44.917	GKR06-2M □□□090C31	498
	55	1.2	67	1.2			362	49.444	GKR06-2M □□□090C31	498

50 Hz: P_N=2.2 kW
60 Hz: P_N=2.6 kW
87 Hz: P_N=3.9 kW

n_N	1440 r/min		1740 r/min		2550 r/min		M_2 [Nm]	i		
f_N	50 Hz		60 Hz		87 Hz					
P_N	2.2 kW		2.6 kW		3.9 kW					
	n_2 [r/min]	c	n_2 [r/min]	c	n_2 [r/min]	c				
	404	2.8	488	2.7	715	2.3	49	3.565	GKR05-2M □□□100C12	498
	295	2.2	356	2.1	522	1.8	68	4.889	GKR05-2M □□□100C12	498
	230	1.8	278	1.7	408	1.5	87	6.257	GKR05-2M □□□100C12	498
	209	1.9	253	1.8	371	1.6	95	6.883	GKR05-2M □□□100C12	498
	184	1.7	223	1.6	326	1.5	108	7.817	GKR05-2M □□□100C12	498
	153	1.5	184	1.4	270	1.2	131	9.440	GKR05-2M □□□100C12	498
	147	2.8	178	2.7	260	2.4	136	9.800	GKR06-2M □□□100C12	498
	134	1.4	162	1.3	238	1.2	149	10.720	GKR05-2M □□□100C12	498
	127	2.8	153	2.6	224	2.3	158	11.376	GKR06-2M □□□100C12	498
	119	1.2	144	1.2	211	1.0	167	12.081	GKR05-2M □□□100C12	498
	116	2.6	140	2.5	205	2.2	173	12.444	GKR06-2M □□□100C12	498
	109	1.2	132	1.1	193	1.0	183	13.216	GKR05-2M □□□100C12	498
	105	1.1	127	1.1	186	1.0	190	13.719	GKR05-2M □□□100C12	498
	105	2.2	127	2.1	186	1.9	190	13.720	GKR06-2M □□□100C12	498
	96	1.1	116	1.0	170	0.9	208	15.008	GKR05-2M □□□100C12	498
	91	2.1	110	2.0	161	1.7	220	15.873	GKR06-2M □□□100C12	498
	85	1.0	103	1.0	151	0.9	234	16.857	GKR05-2M □□□100C12	498
	82	1.9	99	1.8	146	1.6	243	17.500	GKR06-2M □□□100C12	498
	75	0.9	91	0.9			265	19.143	GKR05-2M □□□100C12	498
	74	1.7	90	1.6	131	1.4	270	19.444	GKR06-2M □□□100C12	498
	70	0.8					286	20.650	GKR05-2M □□□100C12	498
	67	1.5	81	1.4	119	1.3	297	21.438	GKR06-2M □□□100C12	498
	57	1.3	69	1.3	101	1.2	351	25.309	GKR06-2M □□□100C12	498
	52	1.2	62	1.2	91	1.1	387	27.903	GKR06-2M □□□100C12	498
	46	1.0	55	1.0	81	1.0	436	31.481	GKR06-2M □□□100C12	498
	42	0.9	50	0.9	74	0.9	481	34.708	GKR06-2M □□□100C12	498

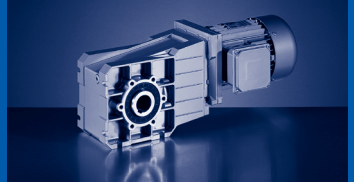

50 Hz: P_N=3.0 kW
60 Hz: P_N=3.6 kW

n_N	2890 r/min		3490 r/min				M_2 [Nm]	i		
f_N	50 Hz		60 Hz							
P_N	3.0 kW		3.6 kW							
	n_2 [r/min]	c	n_2 [r/min]	c						
	811	3.3	979	3.1			34	3.565	GKR05-2M □□□100C31	498
	591	2.6	714	2.4			46	4.889	GKR05-2M □□□100C31	498
	462	2.1	558	2.0			59	6.257	GKR05-2M □□□100C31	498
	420	2.2	507	2.1			65	6.883	GKR05-2M □□□100C31	498
	370	2.0	447	1.9			74	7.817	GKR05-2M □□□100C31	498
	306	1.7	370	1.6			89	9.440	GKR05-2M □□□100C31	498
	270	1.6	326	1.5			101	10.720	GKR05-2M □□□100C31	498
	254	3.3	307	3.1			107	11.376	GKR06-2M □□□100C31	498
	239	1.5	289	1.4			114	12.081	GKR05-2M □□□100C31	498
	232	3.1	280	2.9			117	12.444	GKR06-2M □□□100C31	498
	219	1.4	264	1.3			125	13.216	GKR05-2M □□□100C31	498
	211	1.4	254	1.3			129	13.719	GKR05-2M □□□100C31	498
	211	2.7	254	2.5			129	13.720	GKR06-2M □□□100C31	498
	193	1.3	233	1.2			141	15.008	GKR05-2M □□□100C31	498
	182	2.4	220	2.3			150	15.873	GKR06-2M □□□100C31	498
	171	1.2	207	1.1			159	16.857	GKR05-2M □□□100C31	498
	165	2.2	199	2.1			165	17.500	GKR06-2M □□□100C31	498
	151	1.1	182	1.0			180	19.143	GKR05-2M □□□100C31	498
	149	2.0	180	1.9			183	19.444	GKR06-2M □□□100C31	498
	140	1.0	169	0.9			195	20.650	GKR05-2M □□□100C31	498
	135	1.8	163	1.7			202	21.438	GKR06-2M □□□100C31	498
	123	0.9	149	0.8			221	23.450	GKR05-2M □□□100C31	498
	114	1.7	138	1.6			238	25.309	GKR06-2M □□□100C31	498
	104	1.6	125	1.5			263	27.903	GKR06-2M □□□100C31	498
	92	1.4	111	1.3			297	31.481	GKR06-2M □□□100C31	498
	83	1.3	101	1.2			327	34.708	GKR06-2M □□□100C31	498

50 Hz: P_N=3.0 kW
60 Hz: P_N=3.6 kW
87 Hz: P_N=5.4 kW

n_N	1430 r/min		1730 r/min		2540 r/min		M_2 [Nm]	i		
f_N	50 Hz		60 Hz		87 Hz					
P_N	3.0 kW		3.6 kW		5.4 kW					
	n_2 [r/min]	c	n_2 [r/min]	c	n_2 [r/min]	c				
	417	3.1	504	2.9	740	2.6	65	3.431	GKR06-2M □□□100C32	498
	401	2.0	485	1.9	713	1.7	68	3.565	GKR05-2M □□□100C32	498
	304	2.8	368	2.7	540	2.3	90	4.706	GKR06-2M □□□100C32	498
	293	1.6	354	1.5	520	1.3	93	4.889	GKR05-2M □□□100C32	498
	237	2.4	287	2.3	422	2.1	115	6.022	GKR06-2M □□□100C32	498
	229	1.3	277	1.3	406	1.1	119	6.257	GKR05-2M □□□100C32	498
	221	2.8	267	2.7	392	2.4	123	6.481	GKR06-2M □□□100C32	498
	208	1.4	251	1.3	369	1.2	131	6.883	GKR05-2M □□□100C32	498
	200	2.6	242	2.4	356	2.2	136	7.146	GKR06-2M □□□100C32	498
	183	1.3	221	1.2	325	1.1	149	7.817	GKR05-2M □□□100C32	498
	161	2.4	195	2.3	286	2.0	169	8.889	GKR06-2M □□□100C32	498
	152	1.1	183	1.0	269	0.9	180	9.440	GKR05-2M □□□100C32	498
	146	2.1	177	2.0	259	1.7	187	9.800	GKR06-2M □□□100C32	498
	133	1.0	161	1.0	237	0.8	204	10.720	GKR05-2M □□□100C32	498
	126	2.0	152	1.9	223	1.7	217	11.376	GKR06-2M □□□100C32	498
	118	0.9	143	0.9			230	12.081	GKR05-2M □□□100C32	498
	115	1.9	139	1.8	204	1.6	237	12.444	GKR06-2M □□□100C32	498
	108	0.9	131	0.8			252	13.216	GKR05-2M □□□100C32	498
	104	0.8					261	13.719	GKR05-2M □□□100C32	498
	104	1.6	126	1.6	185	1.4	261	13.720	GKR06-2M □□□100C32	498
	90	1.5	109	1.4	160	1.3	302	15.873	GKR06-2M □□□100C32	498
	82	1.4	99	1.3	145	1.1	333	17.500	GKR06-2M □□□100C32	498
	74	1.2	89	1.2	131	1.0	370	19.444	GKR06-2M □□□100C32	498
	67	1.1	81	1.1	119	0.9	408	21.438	GKR06-2M □□□100C32	498
	57	0.9	68	0.9	100	0.9	482	25.309	GKR06-2M □□□100C32	498
	51	0.9	62	0.9	91	0.8	531	27.903	GKR06-2M □□□100C32	498

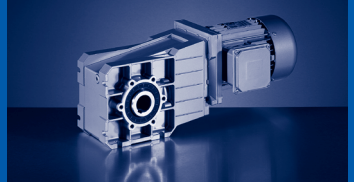

50 Hz: P_N=4.0 kW
60 Hz: P_N=4.8 kW

n_N	2840 r/min		3440 r/min				M_2 [Nm]	i		
f_N	50 Hz		60 Hz							
P_N	4.0 kW		4.8 kW							
	n_2 [r/min]	c	n_2 [r/min]	c						
	797	2.4	965	2.3			46	3.565	GKR05-2M □□□100C41	498
	581	1.9	704	1.8			63	4.889	GKR05-2M □□□100C41	498
	472	2.9	571	2.8			77	6.022	GKR06-2M □□□100C41	498
	454	1.6	550	1.5			80	6.257	GKR05-2M □□□100C41	498
	413	1.7	500	1.6			88	6.883	GKR05-2M □□□100C41	498
	397	3.1	481	2.9			91	7.146	GKR06-2M □□□100C41	498
	363	1.5	440	1.4			100	7.817	GKR05-2M □□□100C41	498
	320	2.9	387	2.7			114	8.889	GKR06-2M □□□100C41	498
	301	1.3	364	1.2			121	9.440	GKR05-2M □□□100C41	498
	290	2.5	351	2.3			125	9.800	GKR06-2M □□□100C41	498
	265	1.2	321	1.1			137	10.720	GKR05-2M □□□100C41	498
	250	2.4	302	2.3			145	11.376	GKR06-2M □□□100C41	498
	235	1.1	285	1.0			154	12.081	GKR05-2M □□□100C41	498
	228	2.3	276	2.2			159	12.444	GKR06-2M □□□100C41	498
	215	1.0	260	1.0			169	13.216	GKR05-2M □□□100C41	498
	207	1.0	251	0.9			175	13.719	GKR05-2M □□□100C41	498
	207	2.0	251	1.8			175	13.720	GKR06-2M □□□100C41	498
	189	0.9	229	0.9			192	15.008	GKR05-2M □□□100C41	498
	179	1.8	217	1.7			203	15.873	GKR06-2M □□□100C41	498
	169	0.9	204	0.8			215	16.857	GKR05-2M □□□100C41	498
	162	1.6	197	1.5			224	17.500	GKR06-2M □□□100C41	498
	146	1.5	177	1.4			249	19.444	GKR06-2M □□□100C41	498
	133	1.3	161	1.3			274	21.438	GKR06-2M □□□100C41	498
	112	1.3	136	1.2			323	25.309	GKR06-2M □□□100C41	498
	102	1.2	123	1.1			357	27.903	GKR06-2M □□□100C41	498
	90	1.0	109	1.0			402	31.481	GKR06-2M □□□100C41	498
	82	0.9	99	0.9			444	34.708	GKR06-2M □□□100C41	498

50 Hz: P_N=4.0 kW
60 Hz: P_N=4.8 kW
87 Hz: P_N=7.1 kW

n_N	1450 r/min		1750 r/min		2560 r/min		M_2 [Nm]	i		
f_N	50 Hz		60 Hz		87 Hz					
P_N	4.0 kW		4.8 kW		7.1 kW					
	n_2 [r/min]	c	n_2 [r/min]	c	n_2 [r/min]	c				
	423	2.3	510	2.2	746	2.0	86	3.431	GKR06-2M □□□112C22	498
	308	2.1	372	2.0	544	1.8	118	4.706	GKR06-2M □□□112C22	498
	241	1.9	291	1.8	425	1.6	151	6.022	GKR06-2M □□□112C22	498
	224	2.2	270	2.1	395	1.8	162	6.481	GKR06-2M □□□112C22	498
	203	2.0	245	1.9	358	1.6	179	7.146	GKR06-2M □□□112C22	498
	163	1.8	197	1.7	288	1.5	223	8.889	GKR06-2M □□□112C22	498
	148	1.6	179	1.5	261	1.3	245	9.800	GKR06-2M □□□112C22	498
	128	1.5	154	1.5	225	1.3	285	11.376	GKR06-2M □□□112C22	498
	117	1.4	141	1.4	206	1.2	311	12.444	GKR06-2M □□□112C22	498
	106	1.2	128	1.2	187	1.0	343	13.720	GKR06-2M □□□112C22	498
	91	1.1	110	1.1	161	1.0	397	15.873	GKR06-2M □□□112C22	498
	83	1.0	100	1.0	146	0.9	438	17.500	GKR06-2M □□□112C22	498
	75	0.9	90	0.9			487	19.444	GKR06-2M □□□112C22	498
	68	0.8					537	21.438	GKR06-2M □□□112C22	498

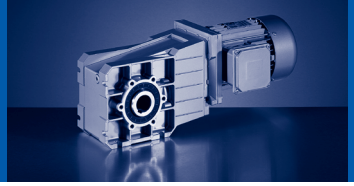

50 Hz: P_N=5.5 kW
60 Hz: P_N=6.6 kW

n_N	2900 r/min		3500 r/min				M_2 [Nm]	i		
f_N	50 Hz		60 Hz							
P_N	5.5 kW		6.6 kW							
	n_2 [r/min]	c	n_2 [r/min]	c						
	845	2.7	1020	2.6			59	3.431	GKR06-2M □□□112C31	498
	616	2.5	744	2.3			81	4.706	GKR06-2M □□□112C31	498
	482	2.2	581	2.0			104	6.022	GKR06-2M □□□112C31	498
	447	2.5	540	2.4			112	6.481	GKR06-2M □□□112C31	498
	406	2.3	490	2.1			123	7.146	GKR06-2M □□□112C31	498
	326	2.1	394	2.0			153	8.889	GKR06-2M □□□112C31	498
	296	1.8	357	1.7			169	9.800	GKR06-2M □□□112C31	498
	255	1.8	308	1.7			196	11.376	GKR06-2M □□□112C31	498
	233	1.7	281	1.6			214	12.444	GKR06-2M □□□112C31	498
	211	1.5	255	1.4			236	13.720	GKR06-2M □□□112C31	498
	183	1.3	221	1.2			273	15.873	GKR06-2M □□□112C31	498
	166	1.2	200	1.1			301	17.500	GKR06-2M □□□112C31	498
	149	1.1	180	1.0			335	19.444	GKR06-2M □□□112C31	498
	135	1.0	163	0.9			369	21.438	GKR06-2M □□□112C31	498

50 Hz: P_N=5.5 kW
60 Hz: P_N=6.6 kW
87 Hz: P_N=9.7 kW

n_N	1445 r/min		1745 r/min		2555 r/min		M_2 [Nm]	i		
f_N	50 Hz		60 Hz		87 Hz					
P_N	5.5 kW		6.6 kW		9.7 kW					
	n_2 [r/min]	c	n_2 [r/min]	c	n_2 [r/min]	c				
	421	1.7	509	1.6	745	1.4	119	3.431	GKR06-2M □□□112C32	498
	307	1.5	371	1.5	543	1.3	163	4.706	GKR06-2M □□□112C32	498
	240	1.4	290	1.3	424	1.1	208	6.022	GKR06-2M □□□112C32	498
	223	1.6	269	1.5	394	1.3	224	6.481	GKR06-2M □□□112C32	498
	202	1.4	244	1.3	358	1.2	247	7.146	GKR06-2M □□□112C32	498
	163	1.3	196	1.3	287	1.1	307	8.889	GKR06-2M □□□112C32	498
	147	1.1	178	1.1	261	1.0	338	9.800	GKR06-2M □□□112C32	498
	127	1.1	153	1.1	225	0.9	393	11.376	GKR06-2M □□□112C32	498
	116	1.1	140	1.0	205	0.9	430	12.444	GKR06-2M □□□112C32	498
	105	0.9	127	0.9			474	13.720	GKR06-2M □□□112C32	498
	91	0.8					548	15.873	GKR06-2M □□□112C32	498

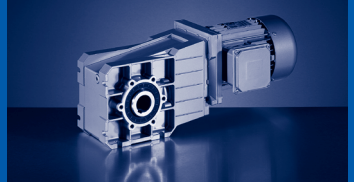

50 Hz: P_N=7.5 kW
60 Hz: P_N=9.0 kW

n_N	2890 r/min		3490 r/min				M_2 [Nm]	i		
f_N	50 Hz		60 Hz							
P_N	7.5 kW		9.0 kW							
	n_2 [r/min]	c	n_2 [r/min]	c						
	842	2.0	1017	1.9			81	3.431	GKR06-2M □□□112C41	498
	614	1.8	742	1.7			111	4.706	GKR06-2M □□□112C41	498
	480	1.6	580	1.5			142	6.022	GKR06-2M □□□112C41	498
	446	1.8	539	1.7			153	6.481	GKR06-2M □□□112C41	498
	404	1.7	488	1.6			168	7.146	GKR06-2M □□□112C41	498
	325	1.6	393	1.5			209	8.889	GKR06-2M □□□112C41	498
	295	1.3	356	1.3			231	9.800	GKR06-2M □□□112C41	498
	254	1.3	307	1.2			268	11.376	GKR06-2M □□□112C41	498
	232	1.2	280	1.2			293	12.444	GKR06-2M □□□112C41	498
	211	1.1	254	1.0			323	13.720	GKR06-2M □□□112C41	498
	182	1.0	220	0.9			374	15.873	GKR06-2M □□□112C41	498
	165	0.9	199	0.8			412	17.500	GKR06-2M □□□112C41	498

50 Hz: P_N=0.75 kW
60 Hz: P_N=0.92 kW
87 Hz: P_N=1.35 kW

n_N	1410 r/min		1710 r/min		2520 r/min		M_2 [Nm]	i		
f_N	50 Hz		60 Hz		87 Hz					
P_N	0.75 kW		0.92 kW		1.35 kW					
	n_2 [r/min]	c	n_2 [r/min]	c	n_2 [r/min]	c				
	272	2.8	330	2.6	486	2.3	25	5.185	GKR04-2M □□□080C32	506
	237	2.5	287	2.4	423	2.1	29	5.963	GKR04-2M □□□080C32	506
	225	4.1	273	4.0	403	3.5	30	6.257	GKR05-2M □□□080C32	506
	198	2.3	241	2.2	354	1.9	34	7.111	GKR04-2M □□□080C32	506
	172	2.1	209	2.0	308	1.7	40	8.178	GKR04-2M □□□080C32	506
	155	1.9	188	1.8	277	1.6	44	9.101	GKR04-2M □□□080C32	506
	135	1.8	163	1.7	241	1.5	51	10.466	GKR04-2M □□□080C32	506
	123	1.6	149	1.6	220	1.4	55	11.449	GKR04-2M □□□080C32	506
	111	1.5	135	1.4	198	1.2	61	12.698	GKR04-2M □□□080C32	506
	107	3.4	129	3.2	191	2.8	64	13.216	GKR05-2M □□□080C32	506
	97	1.3	117	1.2	173	1.1	71	14.603	GKR04-2M □□□080C32	506
	94	3.1	114	3.0	168	2.6	72	15.008	GKR05-2M □□□080C32	506
	91	1.2	110	1.2	162	1.0	75	15.556	GKR04-2M □□□080C32	506
	84	3.0	101	2.8	150	2.5	81	16.857	GKR05-2M □□□080C32	506
	79	1.0	96	1.0	141	0.9	86	17.889	GKR04-2M □□□080C32	506
	74	2.6	89	2.5	132	2.2	92	19.143	GKR05-2M □□□080C32	506
	72	1.0	87	0.9	129	0.8	94	19.556	GKR04-2M □□□080C32	506
	68	2.4	83	2.3	122	2.0	100	20.650	GKR05-2M □□□080C32	506
	63	0.8					109	22.489	GKR04-2M □□□080C32	506
	60	2.1	73	2.0	108	1.8	113	23.450	GKR05-2M □□□080C32	506
	53	1.9	64	1.9	94	1.8	130	26.878	GKR05-2M □□□080C32	506
	51	3.3	61	3.3	90	3.2	135	27.903	GKR06-2M □□□080C32	506
	46	1.6	56	1.6	83	1.6	147	30.522	GKR05-2M □□□080C32	506
	45	2.9	54	2.9	80	2.8	152	31.481	GKR06-2M □□□080C32	506
	42	1.5	51	1.5	75	1.4	161	33.433	GKR05-2M □□□080C32	506
	41	2.7	49	2.7	73	2.6	168	34.708	GKR06-2M □□□080C32	506
	37	1.3	45	1.3	66	1.3	183	37.967	GKR05-2M □□□080C32	506
	35	2.3	42	2.3	62	2.3	197	40.741	GKR06-2M □□□080C32	506
	33	1.2	40	1.2	58	1.2	209	43.267	GKR05-2M □□□080C32	506
	31	2.1	38	2.1	56	2.1	217	44.917	GKR06-2M □□□080C32	506
	29	1.0	35	1.0	51	1.0	237	49.133	GKR05-2M □□□080C32	506
	29	1.9	35	1.9	51	1.9	239	49.444	GKR06-2M □□□080C32	506
	27	1.0	33	1.0	48	1.0	253	52.510	GKR05-2M □□□080C32	506
	24	0.8	29	0.8	42	0.8	288	59.630	GKR05-2M □□□080C32	506
	23	1.3	27	1.3	40	1.3	302	62.500	GKR06-2M □□□080C32	506
	21	1.3	25	1.3	37	1.3	333	68.906	GKR06-2M □□□080C32	506

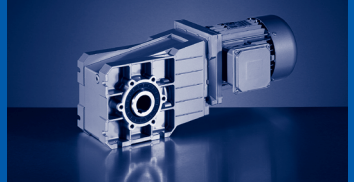

50 Hz: P_N=1.1 kW
60 Hz: P_N=1.3 kW
87 Hz: P_N=2.0 kW

n_N	1430 r/min		1730 r/min		2540 r/min		M_2 [Nm]	i		
f_N	50 Hz		60 Hz		87 Hz					
P_N	1.1 kW		1.3 kW		2.0 kW					
	n_2 [r/min]	c	n_2 [r/min]	c	n_2 [r/min]	c				
	401	5.5	485	5.3	713	4.7	25	3.565	GKR05-2M □□□090C12	506
	276	1.9	334	1.8	490	1.6	36	5.185	GKR04-2M □□□090C12	506
	240	1.7	290	1.7	426	1.5	42	5.963	GKR04-2M □□□090C12	506
	229	3.6	277	3.4	406	3.0	44	6.257	GKR05-2M □□□090C12	506
	201	1.6	243	1.5	357	1.3	50	7.111	GKR04-2M □□□090C12	506
	175	1.4	212	1.4	311	1.2	57	8.178	GKR04-2M □□□090C12	506
	157	1.3	190	1.3	279	1.1	64	9.101	GKR04-2M □□□090C12	506
	152	2.9	183	2.8	269	2.4	66	9.440	GKR05-2M □□□090C12	506
	137	1.2	165	1.2	243	1.0	73	10.466	GKR04-2M □□□090C12	506
	133	2.7	161	2.6	237	2.3	75	10.720	GKR05-2M □□□090C12	506
	125	1.1	151	1.1	222	1.0	80	11.449	GKR04-2M □□□090C12	506
	118	2.5	143	2.4	210	2.1	84	12.081	GKR05-2M □□□090C12	506
	113	1.0	136	1.0	200	0.9	89	12.698	GKR04-2M □□□090C12	506
	108	2.3	131	2.2	192	2.0	92	13.216	GKR05-2M □□□090C12	506
	104	2.3	126	2.2	185	1.9	96	13.719	GKR05-2M □□□090C12	506
	98	0.9	119	0.8			102	14.603	GKR04-2M □□□090C12	506
	95	2.1	115	2.0	169	1.8	105	15.008	GKR05-2M □□□090C12	506
	92	0.8					109	15.556	GKR04-2M □□□090C12	506
	85	2.0	103	2.0	151	1.7	118	16.857	GKR05-2M □□□090C12	506
	75	1.8	90	1.7	133	1.5	134	19.143	GKR05-2M □□□090C12	506
	69	1.7	84	1.6	123	1.4	144	20.650	GKR05-2M □□□090C12	506
	67	3.0	81	2.9	119	2.5	150	21.438	GKR06-2M □□□090C12	506
	61	1.5	74	1.4	108	1.2	164	23.450	GKR05-2M □□□090C12	506
	57	2.6	68	2.6	100	2.4	177	25.309	GKR06-2M □□□090C12	506
	53	1.3	64	1.3	95	1.2	188	26.878	GKR05-2M □□□090C12	506
	51	2.3	62	2.3	91	2.2	195	27.903	GKR06-2M □□□090C12	506
	47	1.1	57	1.1	83	1.1	213	30.522	GKR05-2M □□□090C12	506
	45	2.1	55	2.1	81	2.0	220	31.481	GKR06-2M □□□090C12	506
	43	1.0	52	1.0	76	1.0	233	33.433	GKR05-2M □□□090C12	506
	41	1.9	50	1.9	73	1.8	242	34.708	GKR06-2M □□□090C12	506
	38	0.9	46	0.9	67	0.9	265	37.967	GKR05-2M □□□090C12	506
	35	1.6	43	1.6	62	1.6	284	40.741	GKR06-2M □□□090C12	506
	32	1.4	39	1.4	57	1.4	314	44.917	GKR06-2M □□□090C12	506
	29	1.3	35	1.3	51	1.3	345	49.444	GKR06-2M □□□090C12	506

50 Hz: P_N=1.5 kW
60 Hz: P_N=1.8 kW
87 Hz: P_N=2.7 kW

n_N	1435 r/min		1735 r/min		2545 r/min		M_2 [Nm]	i		
f_N	50 Hz		60 Hz		87 Hz					
P_N	1.5 kW		1.8 kW		2.7 kW					
	n_2 [r/min]	c	n_2 [r/min]	c	n_2 [r/min]	c				
	403	4.1	487	3.9	714	3.4	34	3.565	GKR05-2M □□□090C32	506
	294	3.2	355	3.0	521	2.7	46	4.889	GKR05-2M □□□090C32	506
	277	1.4	335	1.3	491	1.2	49	5.185	GKR04-2M □□□090C32	506
	241	1.3	291	1.2	427	1.1	57	5.963	GKR04-2M □□□090C32	506
	229	2.6	277	2.5	407	2.2	59	6.257	GKR05-2M □□□090C32	506
	209	2.8	252	2.6	370	2.3	65	6.883	GKR05-2M □□□090C32	506
	202	1.2	244	1.1	358	1.0	67	7.111	GKR04-2M □□□090C32	506
	184	2.5	222	2.4	326	2.1	74	7.817	GKR05-2M □□□090C32	506
	176	1.1	212	1.0	311	0.9	78	8.178	GKR04-2M □□□090C32	506
	158	1.0	191	0.9	280	0.8	86	9.101	GKR04-2M □□□090C32	506
	152	2.1	184	2.0	270	1.8	90	9.440	GKR05-2M □□□090C32	506
	137	0.9	166	0.9			99	10.466	GKR04-2M □□□090C32	506
	134	2.0	162	1.9	237	1.7	102	10.720	GKR05-2M □□□090C32	506
	125	0.8					109	11.449	GKR04-2M □□□090C32	506
	119	1.8	144	1.7	211	1.5	115	12.081	GKR05-2M □□□090C32	506
	109	1.7	131	1.6	193	1.4	125	13.216	GKR05-2M □□□090C32	506
	105	1.7	127	1.6	186	1.4	130	13.719	GKR05-2M □□□090C32	506
	96	1.6	116	1.5	170	1.3	142	15.008	GKR05-2M □□□090C32	506
	90	3.0	109	2.9	160	2.5	151	15.873	GKR06-2M □□□090C32	506
	85	1.5	103	1.4	151	1.3	160	16.857	GKR05-2M □□□090C32	506
	82	2.7	99	2.6	145	2.3	166	17.500	GKR06-2M □□□090C32	506
	75	1.3	91	1.3	133	1.1	182	19.143	GKR05-2M □□□090C32	506
	74	2.4	89	2.3	131	2.1	184	19.444	GKR06-2M □□□090C32	506
	70	1.2	84	1.2	123	1.0	196	20.650	GKR05-2M □□□090C32	506
	67	2.2	81	2.1	119	1.9	203	21.438	GKR06-2M □□□090C32	506
	61	1.1	74	1.0	109	0.9	222	23.450	GKR05-2M □□□090C32	506
	57	1.9	69	1.9	101	1.8	240	25.309	GKR06-2M □□□090C32	506
	53	0.9	65	0.9	95	0.9	255	26.878	GKR05-2M □□□090C32	506
	51	1.7	62	1.7	91	1.6	265	27.903	GKR06-2M □□□090C32	506
	47	0.8	57	0.8			289	30.522	GKR05-2M □□□090C32	506
	46	1.5	55	1.5	81	1.4	299	31.481	GKR06-2M □□□090C32	506
	41	1.4	50	1.4	73	1.3	329	34.708	GKR06-2M □□□090C32	506
	35	1.2	43	1.2	63	1.2	386	40.741	GKR06-2M □□□090C32	506
	32	1.1	39	1.1	57	1.1	426	44.917	GKR06-2M □□□090C32	506
	29	1.0	35	1.0	52	1.0	469	49.444	GKR06-2M □□□090C32	506

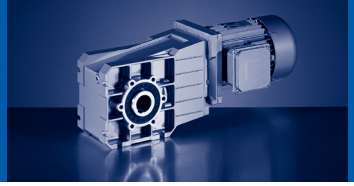

50 Hz: P_N=2.2 kW
60 Hz: P_N=2.6 kW
87 Hz: P_N=3.9 kW

n_N	1445 r/min		1745 r/min		2555 r/min		M_2 [Nm]	i		
f_N	50 Hz		60 Hz		87 Hz					
P_N	2.2 kW		2.6 kW		3.9 kW					
	n_2 [r/min]	c	n_2 [r/min]	c	n_2 [r/min]	c				
	405	2.8	490	2.7	717	2.3	49	3.565	GKR05-2M □□□100C12	506
	296	2.2	357	2.1	523	1.8	68	4.889	GKR05-2M □□□100C12	506
	231	1.8	279	1.7	408	1.5	86	6.257	GKR05-2M □□□100C12	506
	210	1.9	254	1.8	371	1.6	95	6.883	GKR05-2M □□□100C12	506
	185	1.7	223	1.7	327	1.5	108	7.817	GKR05-2M □□□100C12	506
	153	1.5	185	1.4	271	1.2	130	9.440	GKR05-2M □□□100C12	506
	147	2.8	178	2.7	261	2.4	135	9.800	GKR06-2M □□□100C12	506
	135	1.4	163	1.3	238	1.2	148	10.720	GKR05-2M □□□100C12	506
	127	2.8	153	2.6	225	2.3	157	11.376	GKR06-2M □□□100C12	506
	120	1.3	144	1.2	212	1.0	167	12.081	GKR05-2M □□□100C12	506
	116	2.6	140	2.5	205	2.2	172	12.444	GKR06-2M □□□100C12	506
	109	1.2	132	1.1	193	1.0	183	13.216	GKR05-2M □□□100C12	506
	105	1.1	127	1.1	186	1.0	190	13.719	GKR05-2M □□□100C12	506
	105	2.3	127	2.1	186	1.9	190	13.720	GKR06-2M □□□100C12	506
	96	1.1	116	1.0	170	0.9	207	15.008	GKR05-2M □□□100C12	506
	91	2.1	110	2.0	161	1.7	219	15.873	GKR06-2M □□□100C12	506
	86	1.0	104	1.0	152	0.9	233	16.857	GKR05-2M □□□100C12	506
	83	1.9	100	1.8	146	1.6	242	17.500	GKR06-2M □□□100C12	506
	76	0.9	91	0.9			264	19.143	GKR05-2M □□□100C12	506
	74	1.7	90	1.6	131	1.4	269	19.444	GKR06-2M □□□100C12	506
	70	0.8	85	0.8			285	20.650	GKR05-2M □□□100C12	506
	67	1.5	81	1.5	119	1.3	296	21.438	GKR06-2M □□□100C12	506
	57	1.3	69	1.3	101	1.2	350	25.309	GKR06-2M □□□100C12	506
	52	1.2	63	1.2	92	1.1	385	27.903	GKR06-2M □□□100C12	506
	46	1.0	55	1.0	81	1.0	435	31.481	GKR06-2M □□□100C12	506
	42	0.9	50	0.9	74	0.9	479	34.708	GKR06-2M □□□100C12	506

50 Hz: P_N=3.0 kW
60 Hz: P_N=3.6 kW
87 Hz: P_N=5.4 kW

n_N	1445 r/min		1745 r/min		2555 r/min		M_2 [Nm]	i		
f_N	50 Hz		60 Hz		87 Hz					
P_N	3.0 kW		3.6 kW		5.4 kW					
	n_2 [r/min]	c	n_2 [r/min]	c	n_2 [r/min]	c				
	421	3.1	509	2.9	745	2.6	65	3.431	GKR06-2M □□□100C32	506
	405	2.1	490	2.0	717	1.7	67	3.565	GKR05-2M □□□100C32	506
	307	2.8	371	2.7	543	2.4	89	4.706	GKR06-2M □□□100C32	506
	296	1.6	357	1.5	523	1.3	92	4.889	GKR05-2M □□□100C32	506
	240	2.5	290	2.4	424	2.1	113	6.022	GKR06-2M □□□100C32	506
	231	1.3	279	1.3	408	1.1	118	6.257	GKR05-2M □□□100C32	506
	223	2.9	269	2.7	394	2.4	122	6.481	GKR06-2M □□□100C32	506
	210	1.4	254	1.3	371	1.2	130	6.883	GKR05-2M □□□100C32	506
	202	2.6	244	2.5	358	2.2	135	7.146	GKR06-2M □□□100C32	506
	185	1.3	223	1.2	327	1.1	147	7.817	GKR05-2M □□□100C32	506
	163	2.4	196	2.3	287	2.0	167	8.889	GKR06-2M □□□100C32	506
	153	1.1	185	1.0	271	0.9	178	9.440	GKR05-2M □□□100C32	506
	147	2.1	178	2.0	261	1.7	185	9.800	GKR06-2M □□□100C32	506
	135	1.0	163	1.0	238	0.8	202	10.720	GKR05-2M □□□100C32	506
	127	2.0	153	1.9	225	1.7	214	11.376	GKR06-2M □□□100C32	506
	120	0.9	144	0.9			228	12.081	GKR05-2M □□□100C32	506
	116	1.9	140	1.8	205	1.6	234	12.444	GKR06-2M □□□100C32	506
	109	0.9	132	0.8			249	13.216	GKR05-2M □□□100C32	506
	105	0.8					258	13.719	GKR05-2M □□□100C32	506
	105	1.7	127	1.6	186	1.4	258	13.720	GKR06-2M □□□100C32	506
	91	1.5	110	1.4	161	1.3	299	15.873	GKR06-2M □□□100C32	506
	83	1.4	100	1.3	146	1.1	330	17.500	GKR06-2M □□□100C32	506
	74	1.2	90	1.2	131	1.0	366	19.444	GKR06-2M □□□100C32	506
	67	1.1	81	1.1	119	0.9	404	21.438	GKR06-2M □□□100C32	506
	57	0.9	69	0.9	101	0.9	477	25.309	GKR06-2M □□□100C32	506
	52	0.9	63	0.9	92	0.8	526	27.903	GKR06-2M □□□100C32	506

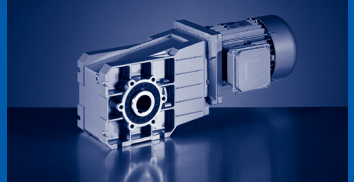

50 Hz: P_N=4.0 kW
60 Hz: P_N=4.8 kW
87 Hz: P_N=7.1 kW

n_N	1455 r/min		1755 r/min		2565 r/min		M_2 [Nm]	i		
f_N	50 Hz		60 Hz		87 Hz					
P_N	4.0 kW		4.8 kW		7.1 kW					
	n_2 [r/min]	c	n_2 [r/min]	c	n_2 [r/min]	c				
	424	2.3	512	2.2	748	2.0	86	3.431	GKR06-2M □□□112C22	506
	309	2.1	373	2.0	545	1.8	117	4.706	GKR06-2M □□□112C22	506
	242	1.9	291	1.8	426	1.6	150	6.022	GKR06-2M □□□112C22	506
	225	2.2	271	2.1	396	1.8	162	6.481	GKR06-2M □□□112C22	506
	204	2.0	246	1.9	359	1.6	178	7.146	GKR06-2M □□□112C22	506
	164	1.8	197	1.8	289	1.5	222	8.889	GKR06-2M □□□112C22	506
	149	1.6	179	1.5	262	1.3	244	9.800	GKR06-2M □□□112C22	506
	128	1.5	154	1.5	226	1.3	284	11.376	GKR06-2M □□□112C22	506
	117	1.5	141	1.4	206	1.2	310	12.444	GKR06-2M □□□112C22	506
	106	1.3	128	1.2	187	1.0	342	13.720	GKR06-2M □□□112C22	506
	92	1.1	111	1.1	162	1.0	396	15.873	GKR06-2M □□□112C22	506
	83	1.0	100	1.0	147	0.9	437	17.500	GKR06-2M □□□112C22	506
	75	0.9	90	0.9			485	19.444	GKR06-2M □□□112C22	506
	68	0.8					535	21.438	GKR06-2M □□□112C22	506

50 Hz: P_N=5.5 kW
60 Hz: P_N=6.6 kW
87 Hz: P_N=9.7 kW

n_N	1470 r/min		1770 r/min		2580 r/min		M_2 [Nm]	i		
f_N	50 Hz		60 Hz		87 Hz					
P_N	5.5 kW		6.6 kW		9.7 kW					
	n_2 [r/min]	c	n_2 [r/min]	c	n_2 [r/min]	c				
	428	1.7	516	1.6	752	1.4	117	3.431	GKR06-2M□□□132C12	506
	312	1.6	376	1.5	548	1.3	160	4.706	GKR06-2M□□□132C12	506
	244	1.4	294	1.3	428	1.1	204	6.022	GKR06-2M□□□132C12	506
	227	1.6	273	1.5	398	1.3	220	6.481	GKR06-2M□□□132C12	506
	206	1.4	248	1.4	361	1.2	243	7.146	GKR06-2M□□□132C12	506
	165	1.4	199	1.3	290	1.1	302	8.889	GKR06-2M□□□132C12	506
	150	1.2	181	1.1	263	1.0	333	9.800	GKR06-2M□□□132C12	506
	129	1.1	156	1.1	227	0.9	386	11.376	GKR06-2M□□□132C12	506
	118	1.1	142	1.0	207	0.9	422	12.444	GKR06-2M□□□132C12	506
	107	0.9	129	0.9			466	13.720	GKR06-2M□□□132C12	506
	93	0.8					539	15.873	GKR06-2M□□□132C12	506

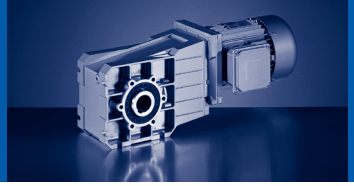

50 Hz: P_N=7.5 kW
60 Hz: P_N=9.0 kW
87 Hz: P_N=13.2 kW

n_N	1460 r/min		1760 r/min		2570 r/min		M_2 [Nm]	i		
f_N	50 Hz		60 Hz		87 Hz					
P_N	7.5 kW		9.0 kW		13.2 kW					
	n_2 [r/min]	c	n_2 [r/min]	c	n_2 [r/min]	c				
	426	1.3	513	1.2	749	1.1	160	3.431	GKR06-2M□□□132C22	506
	310	1.1	374	1.1	546	1.0	219	4.706	GKR06-2M□□□132C22	506
	242	1.0	292	1.0	427	0.8	281	6.022	GKR06-2M□□□132C22	506
	225	1.2	272	1.1	397	1.0	302	6.481	GKR06-2M□□□132C22	506
	204	1.1	246	1.0	360	0.9	333	7.146	GKR06-2M□□□132C22	506
	164	1.0	198	0.9	289	0.8	414	8.889	GKR06-2M□□□132C22	506
	149	0.8					457	9.800	GKR06-2M□□□132C22	506
	128	0.8					530	11.376	GKR06-2M□□□132C22	506

GKR□□-2M H□R

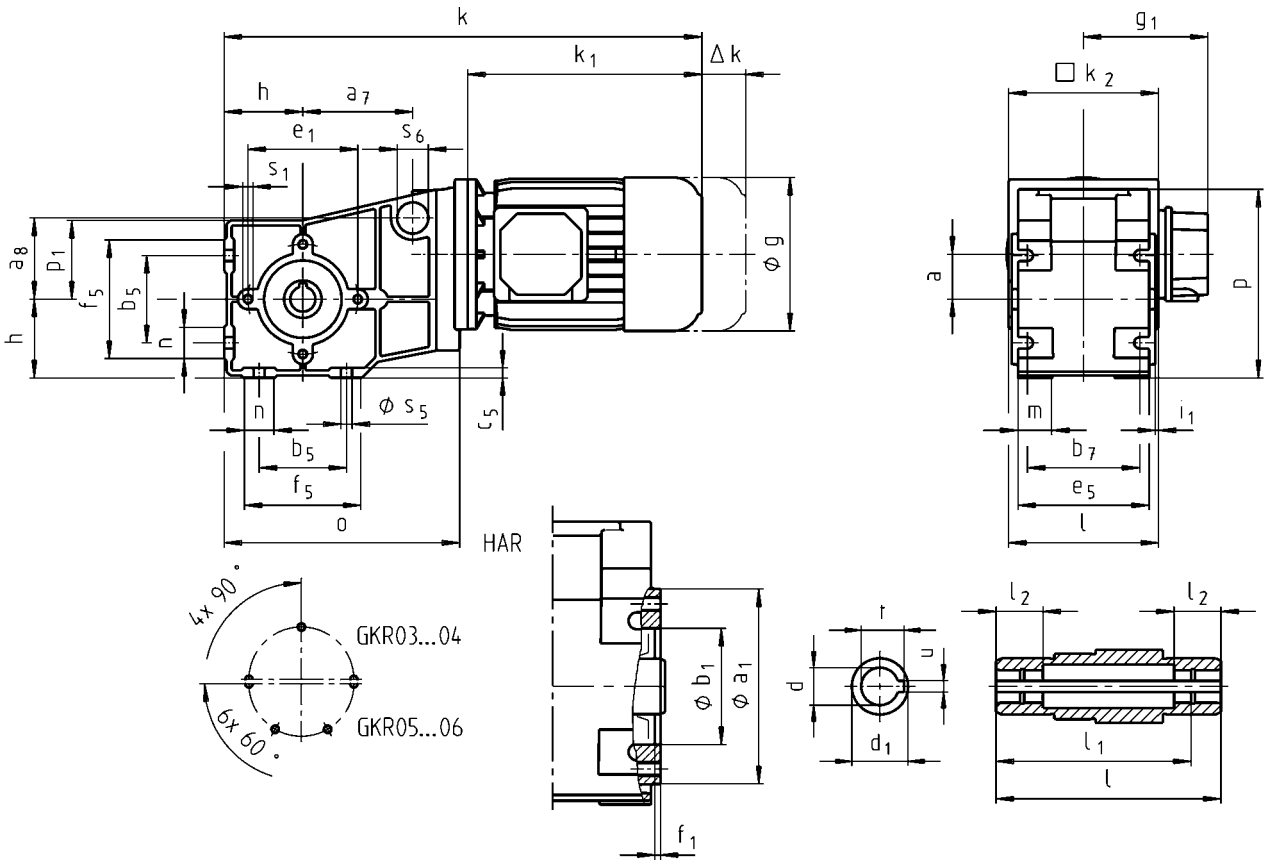

		063C02	063C11	063C12	063C22	063C31	063C32	063C42	071C11 071C13 071C31
g		123							139
g_1	MDEMAXX MDSMAXX	100							109
	MDEMABR MDSMABR	107							118
k_1	MDEMAXX MDSMAXX	156	187		156	187			207
k_2		100	120		100	120			
Δ k	MDEMABR MDSMABR	71	40		71	40			52
	MDFMAXX		128			128			
	MDFMABR		170			170			165
		k							
GKR03		301		332	301		332		
GKR04			383			383			403
GKR05								436	456
GKR06								488	508

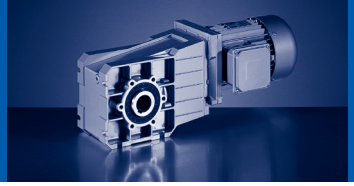

		071C32	071C33	071C42	080C11 080C13 080C31 080C32 080C33 080C42	090C11 090C31	090C32	100C12 100C31 100C32 100C41	112C22 112C31	112C32 112C41
g		139			156	176		194	218	
g_1	MDEMAXX MDSMAXX	109			141	146		157	167	
	MDEMABR MDSMABR	118			132	137		147	158	
k_1	MDEMAXX MDSMAXX	207			224.5	274	248	309	319	363
k_2		120			145	180			222	
Δ k	MDEMABR MDSMABR	52			73	68		76	90	
	MDFMAXX	128						109	102	
	MDFMABR	165			183	181		170	183	
		k								
GKR03		352		352						
GKR04		403			425	485	459			
GKR05		456			479	538	512	573		
GKR06		508			530	590	564	625	641	685

	a	a_7	a_8	h	o	p[1]	p_1	s_6
GKR03	29	66	39	50	142	117	48	25
GKR04	36	88	65	63	189	151	63	25
GKR05	40			80	250.5	181	82	
GKR06	51			100	307	226	100	

	d[2]	d_1	l[1]	l_1	l_2	u	t[3]	i_1	a_1	b_1	e_1	f_1	s_1
	H7					JS9	+0,2			J7			
GKR03	18 20	30 30	100 100	85 85	22 22	6 6	20.8 22.8	2.5 2.5	85	55	70	2.5	M6x12
GKR04	20 25	30 35	120 120	105 105	25 25	6 8	22.8 27	2.5 2.5	104	62	88	3	M8x16
GKR05	30 35	50 50	143 143	127 127	25 25	8 10	33.3 38.3	4 4	116	80	100	4	M8x15
GKR06	40 45	65 65	170 170	150 150	30 30	12 14	43.3 48.8	5 5	140	100	120	4	M10x22

	b_5	b_7	c_5	e_5	f_5	m	n	s_5
GKR03	60	75	7	90	80	22	20	6.6
GKR04	70	90	8	105	95	28	25	9
GKR05	100	100	11	115	138	27	48	9
GKR06	120	125	12	145	164	32	53	11

[1] k_2 !
[2] l_2 !
[3] d = 25 mm > DIN 6885/3

GKR□□-2M HAK

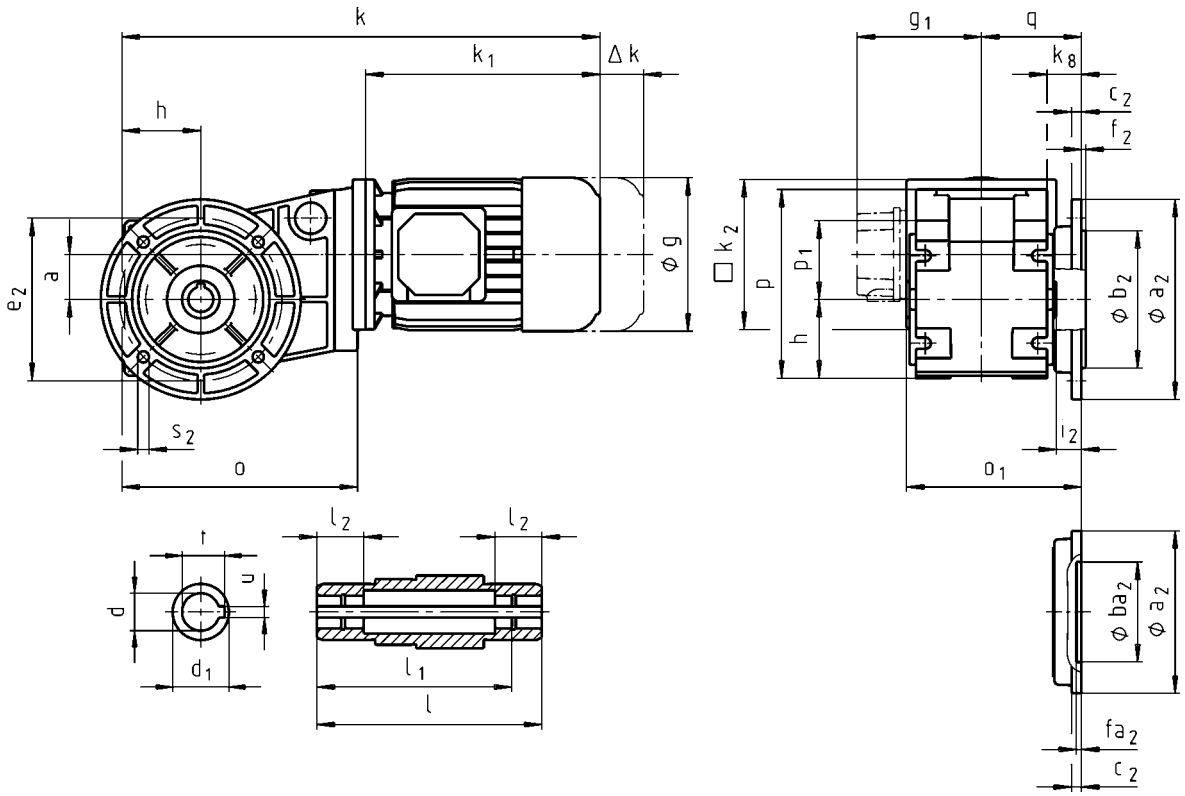

		063C02	063C11	063C12	063C22	063C31	063C32	063C42	071C11 071C13 071C31
g		123							139
g_1	MDEMAXX MDSMAXX	100							109
	MDEMABR MDSMABR	107							118
k_1	MDEMAXX MDSMAXX	156	187		156	187			207
k_2		100	120		100	120			
Δk	MDEMABR MDSMABR	71	40		71	40			52
	MDFMAXX		128			128			
	MDFMABR		170			170			165
		k							
GKR03		301		332	301		332		
GKR04			383			383			403
GKR05								436	456
GKR06								488	508

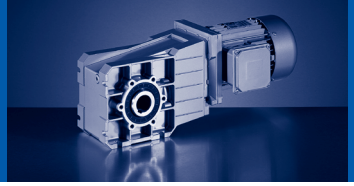

		071C32	071C33	071C42	080C11 080C13 080C31 080C32 080C33 080C42	090C11 090C31	090C32	100C12 100C31 100C32 100C41	112C22 112C31	112C32 112C41
g		139			156	176		194	218	
g_1	MDEMAXX MDSMAXX	109			141	146		157	167	
	MDEMABR MDSMABR	118			132	137		147	158	
k_1	MDEMAXX MDSMAXX	207			224.5	274	248	309	319	363
k_2		120			145	180			222	
Δ k	MDEMABR MDSMABR	52			73	68		76	90	
	MDFMAXX	128						109	102	
	MDFMABR	165			183	181		170	183	
		k								
GKR03		352		352						
GKR04		403			425	485	459			
GKR05		456			479	538	512	573		
GKR06		508			530	590	564	625	641	685

	a	h	k_8	o	p[1]	p_1	q
GKR03	29	50	35	142	117	48	80
GKR04	36	63	28	189	151	63	80
GKR05	40	80	47.5	250.5	181	82	105
GKR06	51	100	54	307	226	100	126.5

	d[2]	d_1	l	l_1	l_2	u	t[3]	i_2	o_1[1]	a_2	b_2	ba_2	c_2	e_2	f_2	fa_2	s_2
	H7					JS9	+0,2				j7	H7					
GKR03	18 20	30 30	100 100	85 85	22 22	6 6	20.8 22.8	30 30	130 130	120 110	80 -	- 60	8 8	100 87	3 -	- 4	7 9
GKR04	20 25	30 35	120 120	105 105	25 25	6 8	22.8 27	20 20	140 140	120 160	80 110		8 8	100 130	3 3.5		7 9
GKR05	30 35	50 50	143 143	127 127	25 25	8 10	33.3 38.3	33.5 33.5	176.5 176.5	160 200	110 130		12 12	130 165	3.5 3.5		9 11
GKR06	40 45	65 65	170 170	150 150	30 30	12 14	43.3 48.8	41.5 41.5	211.5 211.5	200 250	130 180		12 12	165 215	3.5 4		11 14

[1] k_2 !
[2] l_2 !
[3] d = 25 mm > DIN 6885/3

GKR□□-2M V□R

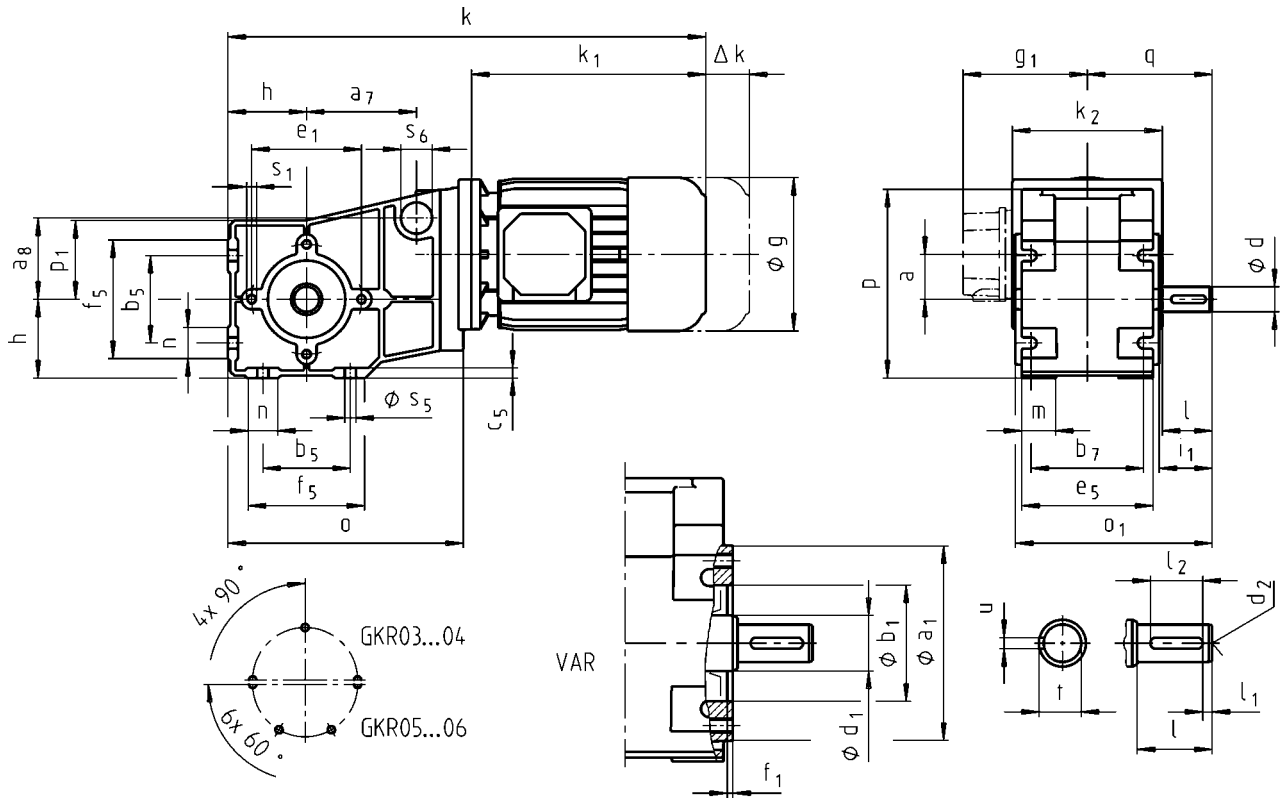

		063C02	063C11	063C12	063C22	063C31	063C32	063C42	071C11 071C13 071C31
g		123							139
g_1	MDEMAXX MDSMAXX	100							109
	MDEMABR MDSMABR	107							118
k_1	MDEMAXX MDSMAXX	156	187		156	187			207
k_2		100	120		100	120			
Δ k	MDEMABR MDSMABR	71	40		71	40			52
	MDFMAXX		128			128			
	MDFMABR		170			170			165
		k							
GKR03		301		332	301		332		
GKR04			383			383			403
GKR05								436	456
GKR06								488	508

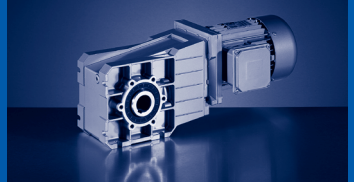

		071C32	071C33	071C42	080C11 080C13 080C31 080C32 080C33 080C42	090C11 090C31	090C32	100C12 100C31 100C32 100C41	112C22 112C31	112C32 112C41
g		139			156	176		194	218	
g_1	MDEMAXX MDSMAXX	109			141	146		157	167	
	MDEMABR MDSMABR	118			132	137		147	158	
k_1	MDEMAXX MDSMAXX	207			224.5	274	248	309	319	363
k_2		120			145	180			222	
Δ k	MDEMABR MDSMABR	52			73	68		76	90	
	MDFMAXX	128						109	102	
	MDFMABR	165			183	181		170	183	
		k								
GKR03		352		352						
GKR04		403			425	485	459			
GKR05		456			479	538	512	573		
GKR06		508			530	590	564	625	641	685

	a	a_7	a_8	h	o	p[1]	p_1	q	s_6
GKR03	29	66	39	50	142	117	48	90	25
GKR04	36	88	65	63	189	151	63	100	25
GKR05	40			80	250.5	181	82	131.5	
GKR06	51			100	307	226	100	155	

	d	d_1	d_2	l	l_1	l_2	u	t	i_1	o_1[1]	a_1	b_1	e_1	f_1	s_1
	k6											J7			
GKR03	20	30	M6	40	5	28	6	22.5	42.5	137.5	85	55	70	2.5	M6x12
GKR04	20	30	M6	40	5	28	6	22.5	42.5	158	104	62	88	3	M8x16
GKR05	30	50	M10	60	6	45	8	33	64	199	116	80	100	4	M8x15
GKR06	35	65	M12	70	7	56	10	38	75	235	140	100	120	4	M10x22

	b_5	b_7	c_5	e_5	f_5	m	n	s_5
GKR03	60	75	7	90	80	22	20	6.6
GKR04	70	90	8	105	95	28	25	9
GKR05	100	100	11	115	138	27	48	9
GKR06	120	125	12	145	164	32	53	11

[1] k_2 !

GKR□□-2M VAK

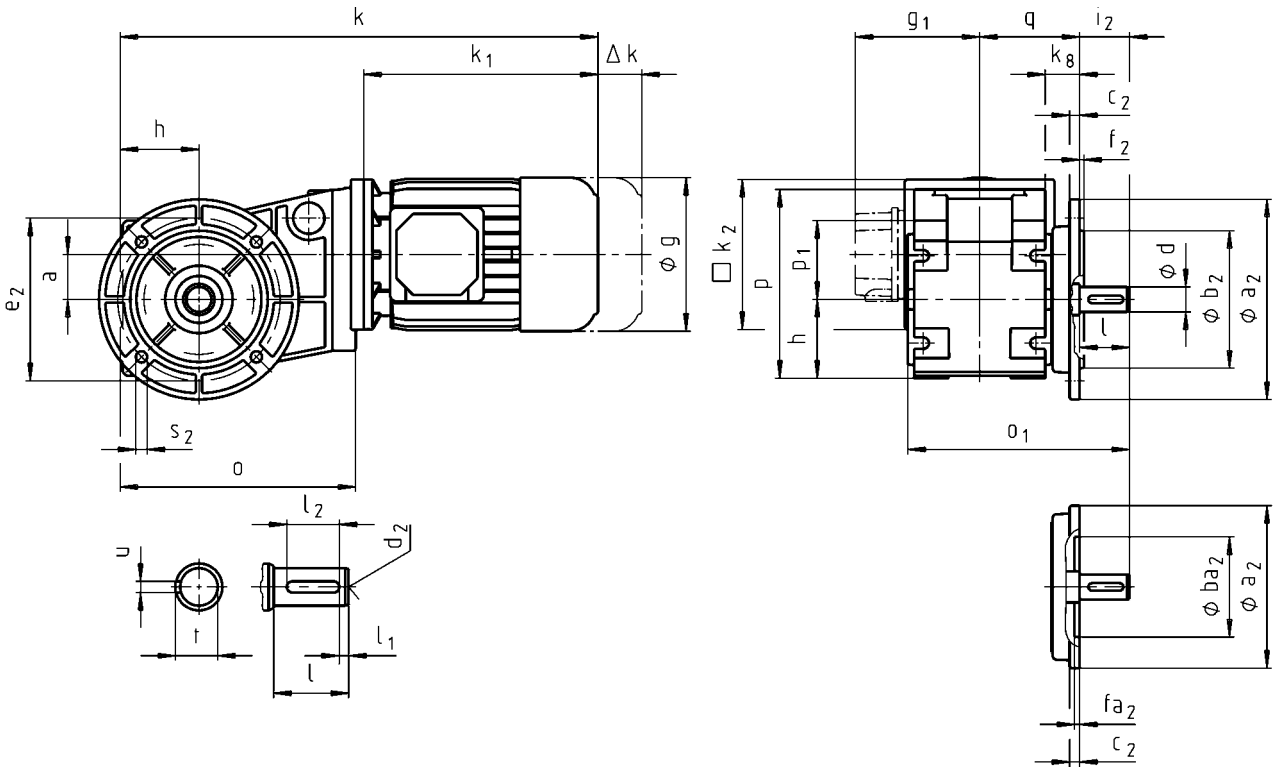

		063C02	063C11	063C12	063C22	063C31	063C32	063C42	071C11 071C13 071C31
g		123							139
g_1	MDEMAXX MDSMAXX	100							109
	MDEMABR MDSMABR	107							118
k_1	MDEMAXX MDSMAXX	156	187		156	187			207
k_2		100	120		100	120			
Δk	MDEMABR MDSMABR	71	40		71	40			52
	MDFMAXX		128			128			
	MDFMABR		170			170			165
		k							
GKR03		301		332	301		332		
GKR04			383			383			403
GKR05								436	456
GKR06								488	508

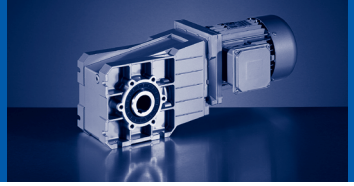

		071C32	071C33	071C42	080C11 080C13 080C31 080C32 080C33 080C42	090C11 090C31	090C32	100C12 100C31 100C32 100C41	112C22 112C31	112C32 112C41
g		139			156	176		194	218	
g_1	MDEMAXX MDSMAXX	109			141	146		157	167	
	MDEMABR MDSMABR	118			132	137		147	158	
k_1	MDEMAXX MDSMAXX	207			224.5	274	248	309	319	363
k_2		120			145	180			222	
Δ k	MDEMABR MDSMABR	52			73	68		76	90	
	MDFMAXX	128						109	102	
	MDFMABR	165			183	181		170	183	
		k								
GKR03		352		352						
GKR04		403			425	485	459			
GKR05		456			479	538	512	573		
GKR06		508			530	590	564	625	641	685

	a	h	k_8	o	p[1]	p_1	q
GKR03	29	50	35	142	117	48	80
GKR04	36	63	28	189	151	63	80.5
GKR05	40	80	47.5	250.5	181	82	105
GKR06	51	100	54	307	226	100	126.5

	d	d_2	l	l_1	l_2	u	t	i_2	o_1[1]	a_2	b_2	ba_2	c_2	e_2	f_2	fa_2	s_2
	k6										j7	H7					
GKR03	20	M6	40	5	28	6	22.5	40	167.5	120 110	80 -	- 60	8 8	100 87	3 -	- 4	7 9
GKR04	20	M6	40	5	28	6	22.5	40	178	120 160	80 110		8 8	100 130	3 3.5		7 9
GKR05	30	M10	60	6	45	8	33	60	232.5	160 200	110 130		12 12	130 165	3.5 3.5		9 11
GKR06	35	M12	70	7	56	10	38	70	276.5	200 250	130 180		12 12	165 215	3.5 4		11 14

[1] k_2 !

GKR□□-2M H□R

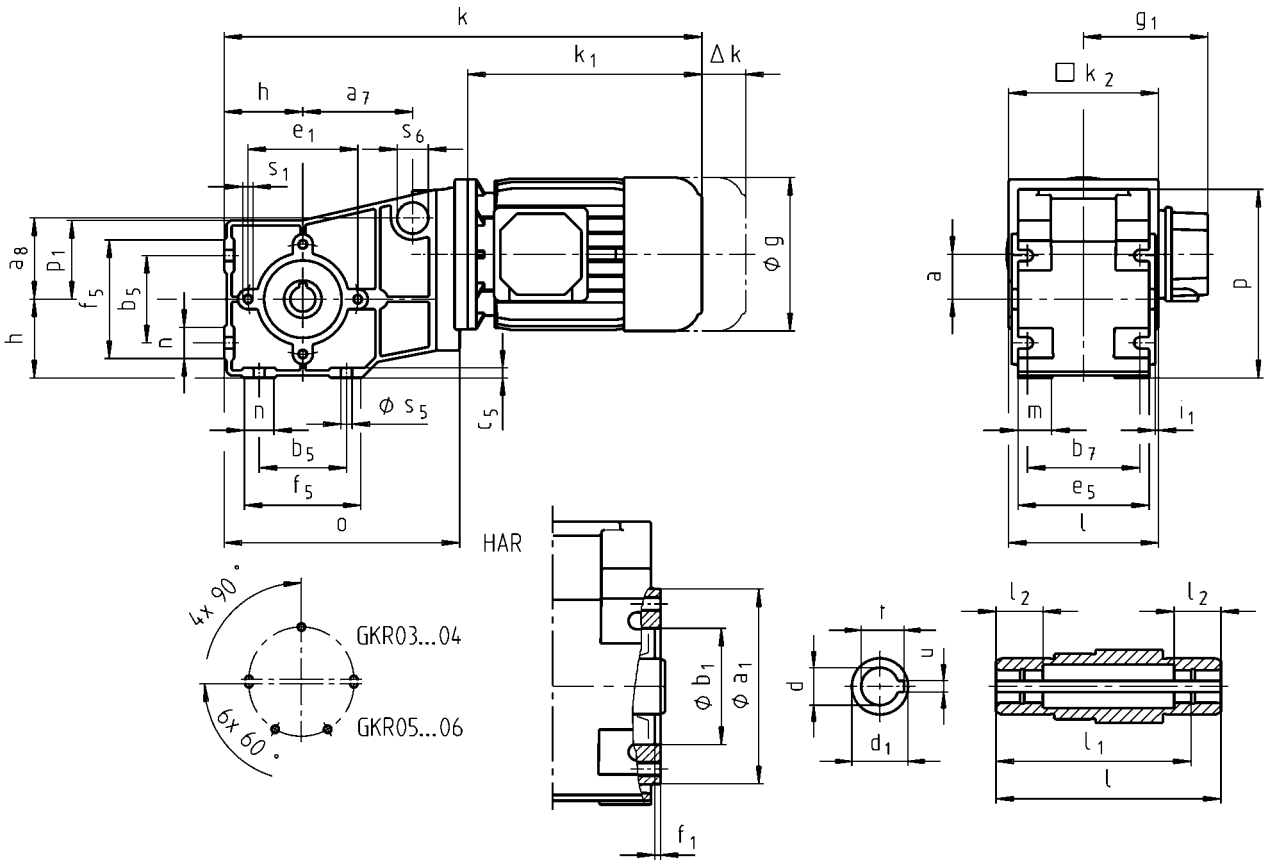
k
k1
Δk
h
a7
e1
s6
s1
a8
p1
f5
b5
n
h
n
Φ s5
c5
b5
f5
o
HAR
4x 90°
GKR03...04
6x 60°
GKR05...06
Φ b1
Φ a1
f1
g1
□ k2
a
p
m
i1
b7
e5
l
t
u
d
d1
l2
l2
l1
l

5

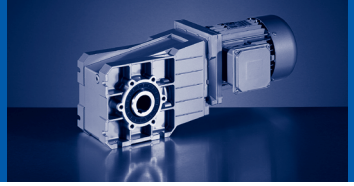

		080C32	090C12 090C32	100C12	100C32	112C22	132C12 132C22
g		156	176	194		218	258
g_1	MHEMAXX	141	146	157		167	195
	MHEMABR	132	137	147		158	187
k_1	MHEMAXX	224.5	274	309	324	363	403
k_2		145		180		222	265
Δ k	MHEMABR	73	68	76		90	109.5
	MHFMAXX	128		109		102	115
	MHFMABR	183	181	170		183	201.5
		k					
GKR04		425	485				
GKR05		479	538	573	588		
GKR06		530	590	625	640	685	733

	a	a_7	a_8	h	o	p[1]	p_1	s_6
GKR04	36	88	65	63	189	151	63	25
GKR05	40			80	250.5	181	82	
GKR06	51			100	307	226	100	

	d[2]	d_1	l[1]	l_1	l_2	u	t[3]	i_1	a_1	b_1	e_1	f_1	s_1
	H7					JS9	+0,2			J7			
GKR04	20 25	30 35	120 120	105 105	25 25	6 8	22.8 27	2.5 2.5	104	62	88	3	M8x16
GKR05	30 35	50 50	143 143	127 127	25 25	8 10	33.3 38.3	4 4	116	80	100	4	M8x15
GKR06	40 45	65 65	170 170	150 150	30 30	12 14	43.3 48.8	5 5	140	100	120	4	M10x22

	b_5	b_7	c_5	e_5	f_5	m	n	s_5
GKR04	70	90	8	105	95	28	25	9
GKR05	100	100	11	115	138	27	48	9
GKR06	120	125	12	145	164	32	53	11

[1] k_2 !
[2] l_2 !
[3] d = 25 mm > DIN 6885/3

GKR□□-2M HAK

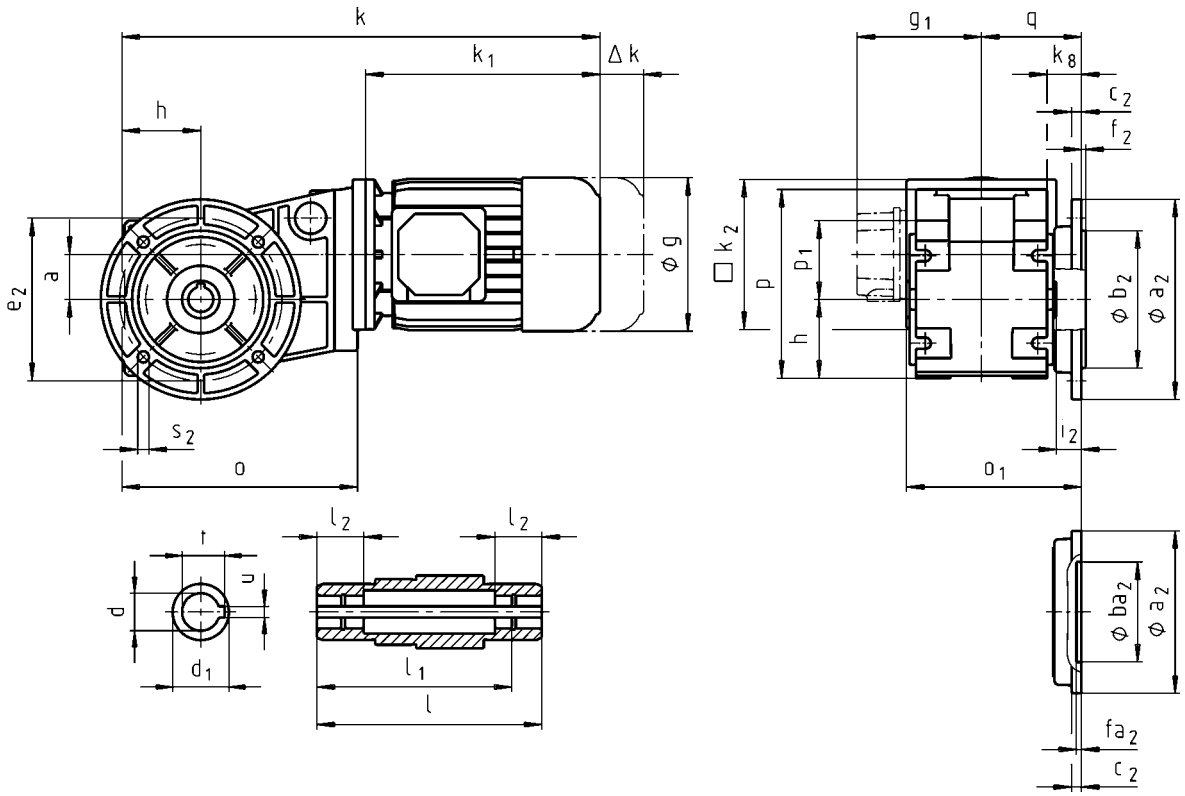
k
k1
Δk
h
e2
a
s2
o
ϕ g
g1
q
k8
c2
f2
□k2
p
p1
h
ϕ b2
ϕ a2
l2
o1
t
u
d
d1
l2
l2
l1
l
ϕ ba2
ϕ a2
fa2
c2

5

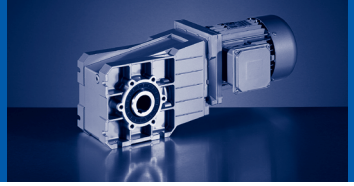

		080C32	090C12 090C32	100C12	100C32	112C22	132C12 132C22
g		156	176	194		218	258
g_1	MHEMAXX	141	146	157		167	195
	MHEMABR	132	137	147		158	187
k_1	MHEMAXX	224.5	274	309	324	363	403
k_2		145		180		222	265
Δ k	MHEMABR	73	68	76		90	109.5
	MHFMAXX	128		109		102	115
	MHFMABR	183	181	170		183	201.5
		k					
GKR04		425	485				
GKR05		479	538	573	588		
GKR06		530	590	625	640	685	733

	a	h	k_8	o	p[1]	p_1	q
GKR04	36	63	28	189	151	63	80
GKR05	40	80	47.5	250.5	181	82	105
GKR06	51	100	54	307	226	100	126.5

	d[2]	d_1	l	l_1	l_2	u	t[3]	i_2	o_1[1]	a_2	b_2	c_2	e_2	f_2	s_2
	H7					JS9	+0,2				j7				
GKR04	20 25	30 35	120 120	105 105	25 25	6 8	22.8 27	20 20	140 140	120 160	80 110	8 8	100 130	3 3.5	7 9
GKR05	30 35	50 50	143 143	127 127	25 25	8 10	33.3 38.3	33.5 33.5	176.5 176.5	160 200	110 130	12 12	130 165	3.5 3.5	9 11
GKR06	40 45	65 65	170 170	150 150	30 30	12 14	43.3 48.8	41.5 41.5	211.5 211.5	200 250	130 180	12 12	165 215	3.5 4	11 14

[1] k_2 !
[2] l_2 !
[3] d = 25 mm > DIN 6885/3

GKR□□-2M V□R

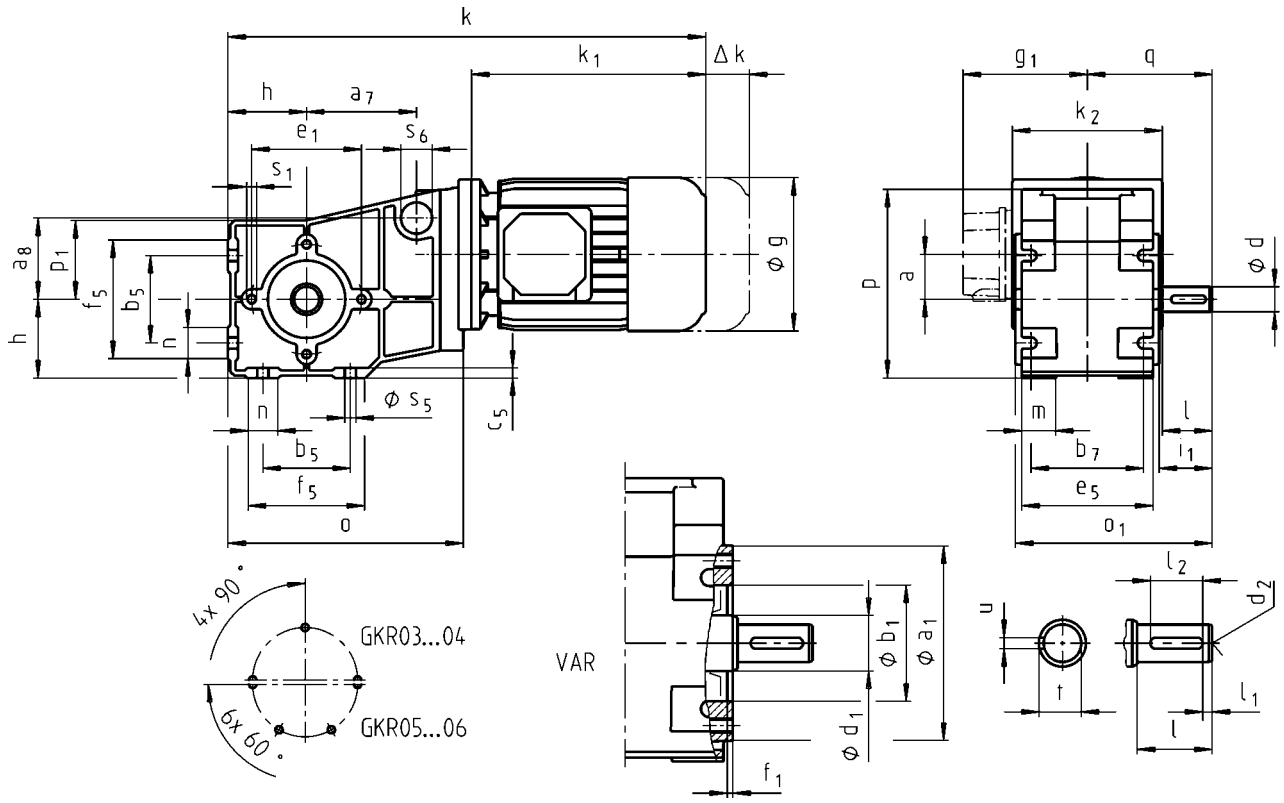
k
k1
Δk
h
a7
e1
s6
s1
a8
p1
f5
b5
n
h
n
Φ s5
c5
b5
f5
o
Φ g
g1
q
k2
p
a
Φ d
m
l
b7
l1
e5
o1
4x 90°
GKR03...04
6x 60°
GKR05...06
VAR
Φ b1
Φ a1
Φ d1
f1
u
t
l2
d2
l1
l

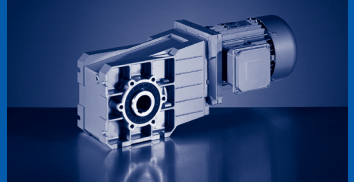

		080C32	090C12 090C32	100C12	100C32	112C22	132C12 132C22
g		156	176	194		218	258
g_1	MHEMAXX	141	146	157		167	195
	MHEMABR	132	137	147		158	187
k_1	MHEMAXX	224.5	274	309	324	363	403
k_2		145	180			222	265
Δ k	MHEMABR	73	68	76		90	109.5
	MHFMAXX	128		109		102	115
	MHFMABR	183	181	170		183	201.5
		k					
GKR04		425	485				
GKR05		479	538	573	588		
GKR06		530	590	625	640	685	733

	a	a_7	a_8	h	o	p[1)]	p_1	q	s_6
GKR04	36	88	65	63	189	151	63	100	25
GKR05	40			80	250.5	181	82	131.5	
GKR06	51			100	307	226	100	155	

	d	d_1	d_2	l	l_1	l_2	u	t	i_1	o_1[1)]	a_1	b_1	e_1	f_1	s_1
	k6											J7			
GKR04	20	30	M6	40	5	28	6	22.5	42.5	158	104	62	88	3	M8x16
GKR05	30	50	M10	60	6	45	8	33	64	199	116	80	100	4	M8x15
GKR06	35	65	M12	70	7	56	10	38	75	235	140	100	120	4	M10x22

	b_5	b_7	c_5	e_5	f_5	m	n	s_5
GKR04	70	90	8	105	95	28	25	9
GKR05	100	100	11	115	138	27	48	9
GKR06	120	125	12	145	164	32	53	11

[1)] k_2 !

GKR□□-2M VAK

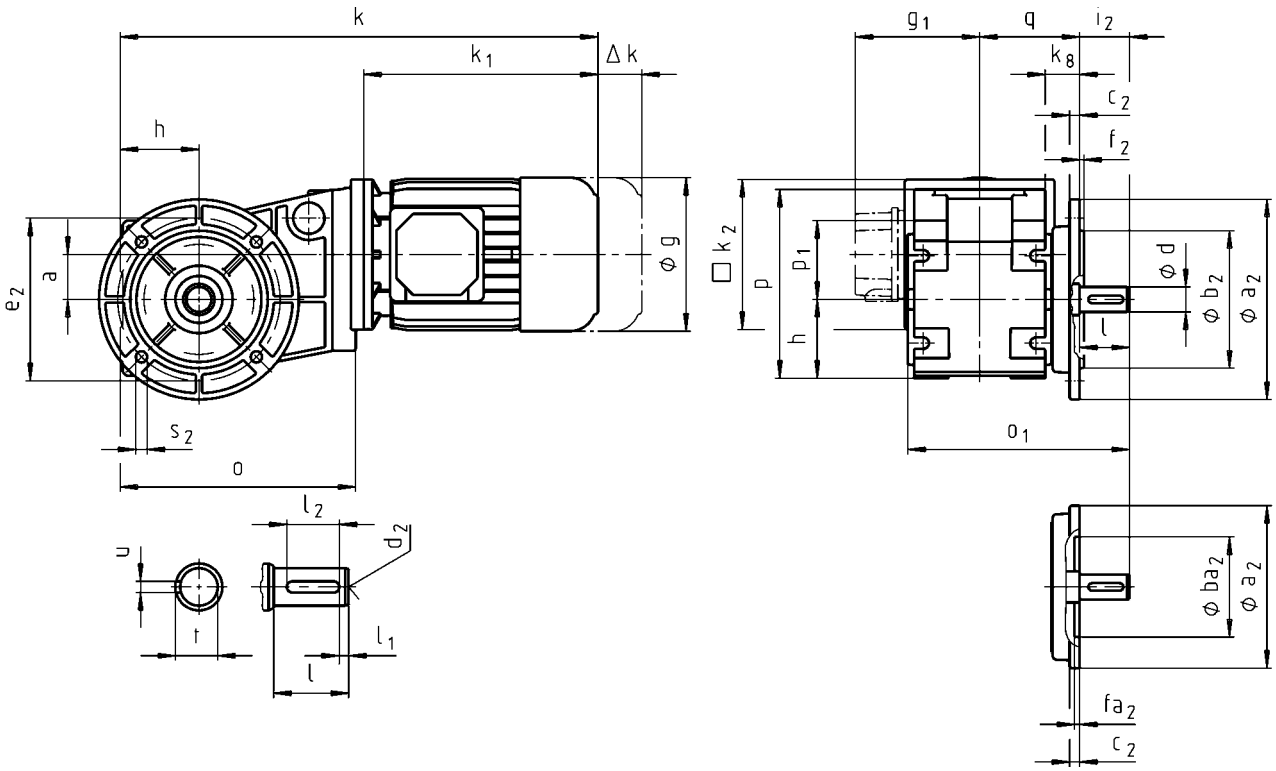
k
k1
Δk
h
e2
a
s2
o
l2
d2
u
t
l1
l
g1
q
i2
k8
c2
f2
□k2
p
p1
h
ϕg
ϕd
ϕb2
ϕa2
l
o1
ϕba2
ϕa2
fa2
c2

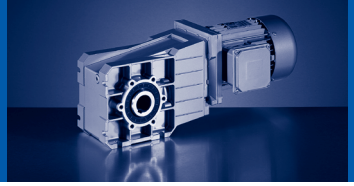

		080C32	090C12 090C32	100C12	100C32	112C22	132C12 132C22
g		156	176	194		218	258
g_1	MHEMAXX	141	146	157		167	195
	MHEMABR	132	137	147		158	187
k_1	MHEMAXX	224.5	274	309	324	363	403
k_2		145		180		222	265
Δ k	MHEMABR	73	68	76		90	109.5
	MHFMAXX	128		109		102	115
	MHFMABR	183	181	170		183	201.5
		k					
GKR04		425	485				
GKR05		479	538	573	588		
GKR06		530	590	625	640	685	733

	a	h	k_8	o	p[1]	p_1	q
GKR04	36	63	28	189	151	63	80.5
GKR05	40	80	47.5	250.5	181	82	105
GKR06	51	100	54	307	226	100	126.5

	d	d_2	l	l_1	l_2	u	t	i_2	o_1[1]	a_2	b_2	c_2	e_2	f_2	s_2
	k6										j7				
GKR04	20	M6	40	5	28	6	22.5	40	178	120 160	80 110	8 8	100 130	3 3.5	7 9
GKR05	30	M10	60	6	45	8	33	60	232.5	160 200	110 130	12 12	130 165	3.5 3.5	9 11
GKR06	35	M12	70	7	56	10	38	70	276.5	200 250	130 180	12 12	165 215	3.5 4	11 14

[1] k_2 !

Hollow shaft with shrink disc

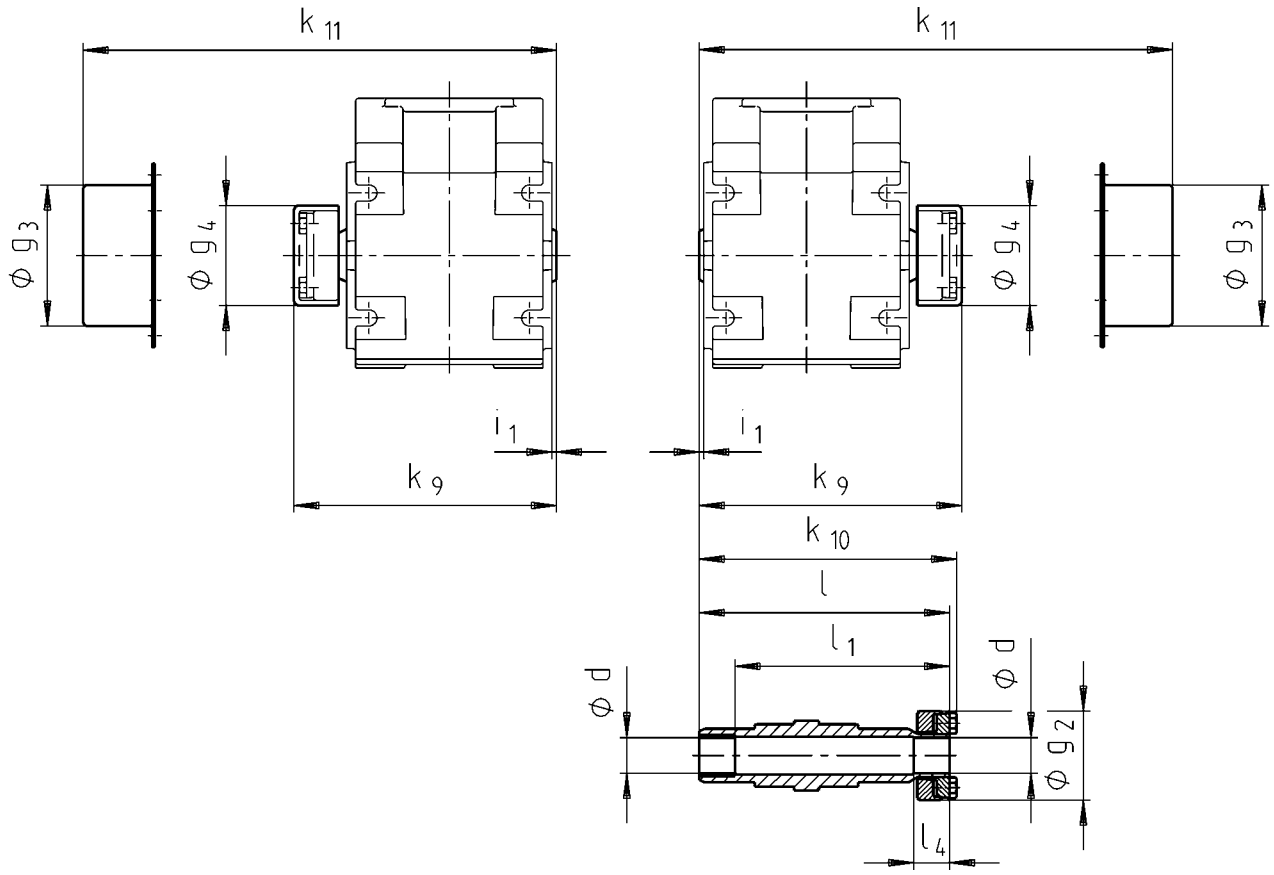

	d [1]	g_2	g_3	g_4	i_1	k_9	k_{10}	k_{11}	l	l_1	l_4
	h6										
GKR03	20	50	65	54	2.5	126	124	138	120	100	20
GKR04						146	144	158	144	120	
GKR05	30 35	80	90	84	4.0	176	177	182	171	151	28
GKR06	40	90	100	94	5.0	202	210	214	204	174	30

[1] Machine shaft design.

- Output flange and hollow shaft with shrink disc (output version SAK) are not possible in the same location. For additional dimensions see output version H□□.
- Ensure that the strength of the machine shaft material is adequate in shrink disc designs.
  When using typical steels (e.g. C45, 42CrMo4), the torques listed in the selection tables can be used without restriction. Please consult us if you wish to use material that is considerably weaker. Medium surface roughness Rz must not exceed 15 µm (turning is sufficient).

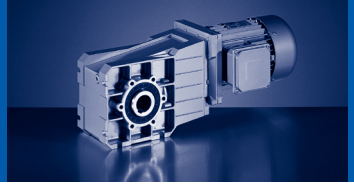

Hoseproof hollow shaft cover

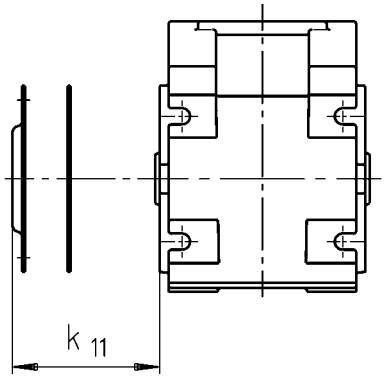

► Cover including gasket

	k_{11}
	[mm]
GKR03	9
GKR04	
GKR05	10
GKR06	11

Gearbox with 2nd output shaft end

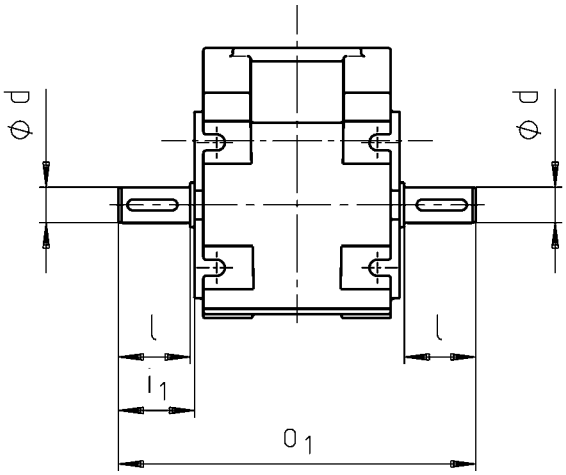

	d	l	i_1	o_1
	k6			
	[mm]	[mm]	[mm]	[mm]
GKR03	20	40	42.5	180
GKR04				200
GKR05	30	60	64.0	263
GKR06	35	70	75.0	310

Rubber buffer for torque plate

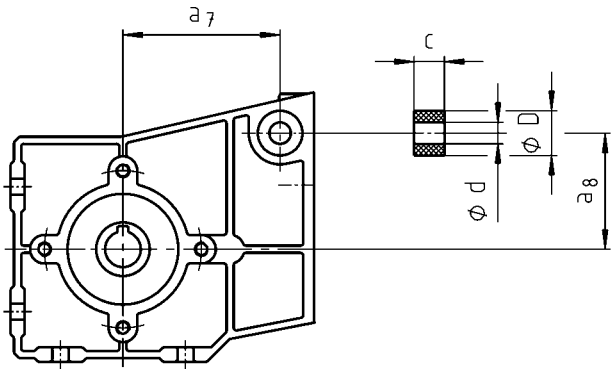

	d	D	c	a_7	a_8
GKR03	10	25	13.0	66.0	39
GKR04				88.0	65

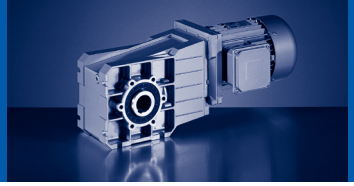

Torque plate on threaded pitch circle

In position 3

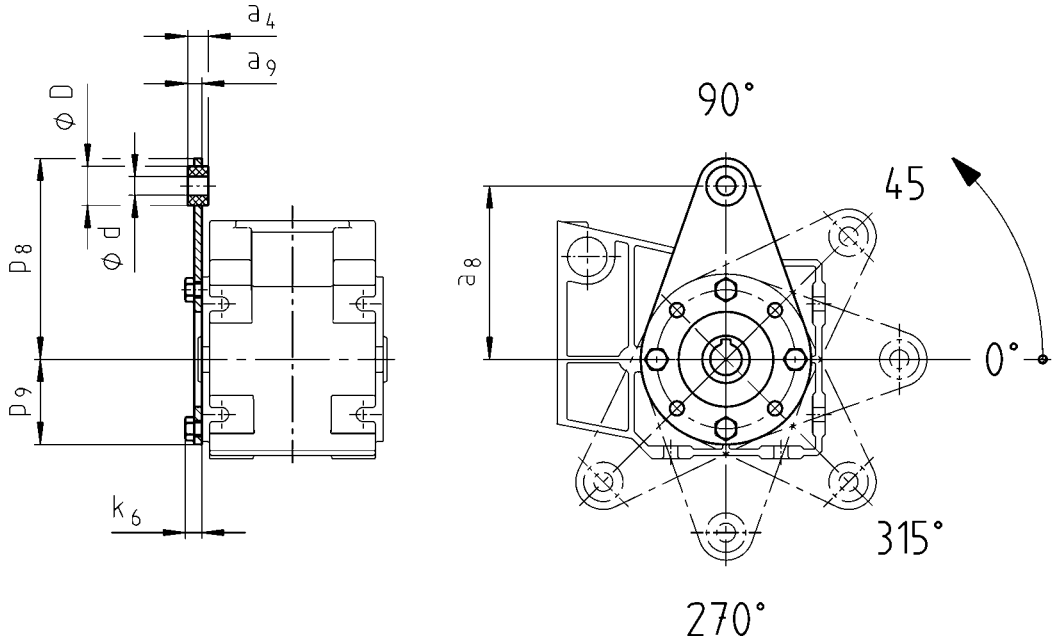

In position 5

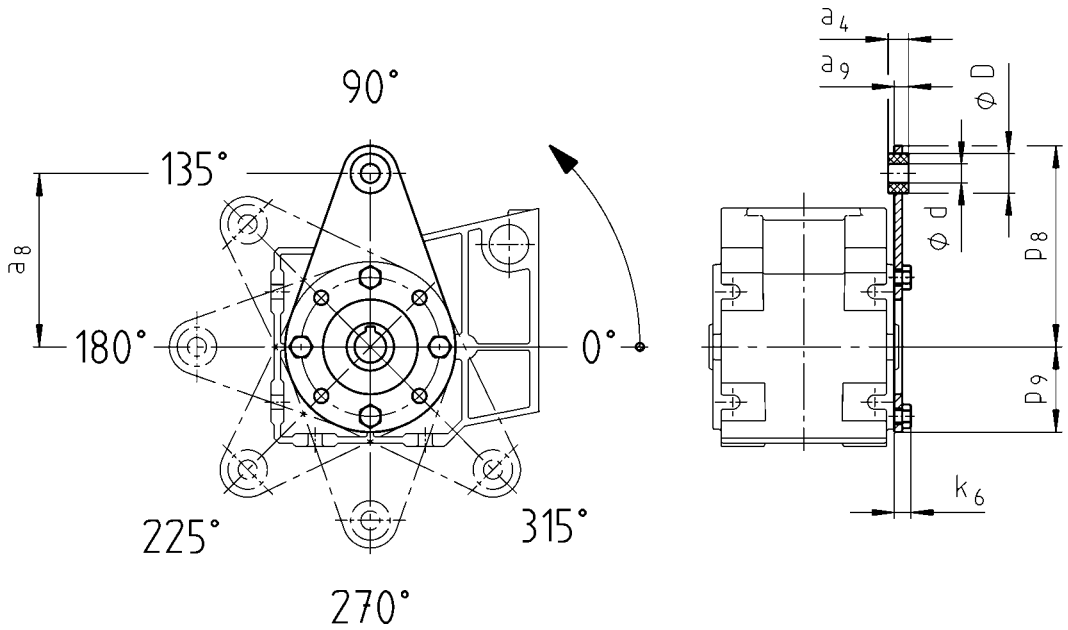

	a_4	a_8	a_9	d	D	k_6	p_8	p_9
GKR03	12	100	8.0	8	20	9	115	42
GKR04	13	110	9.0	10	25	11	128	54

Torque plate on threaded pitch circle

In position 3

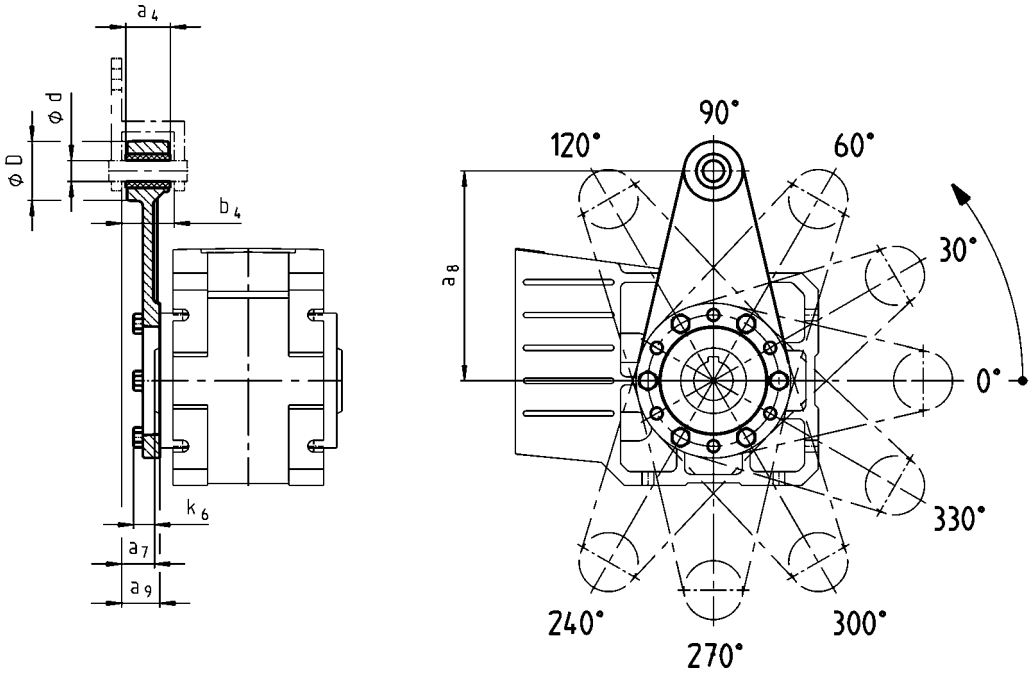

In position 5

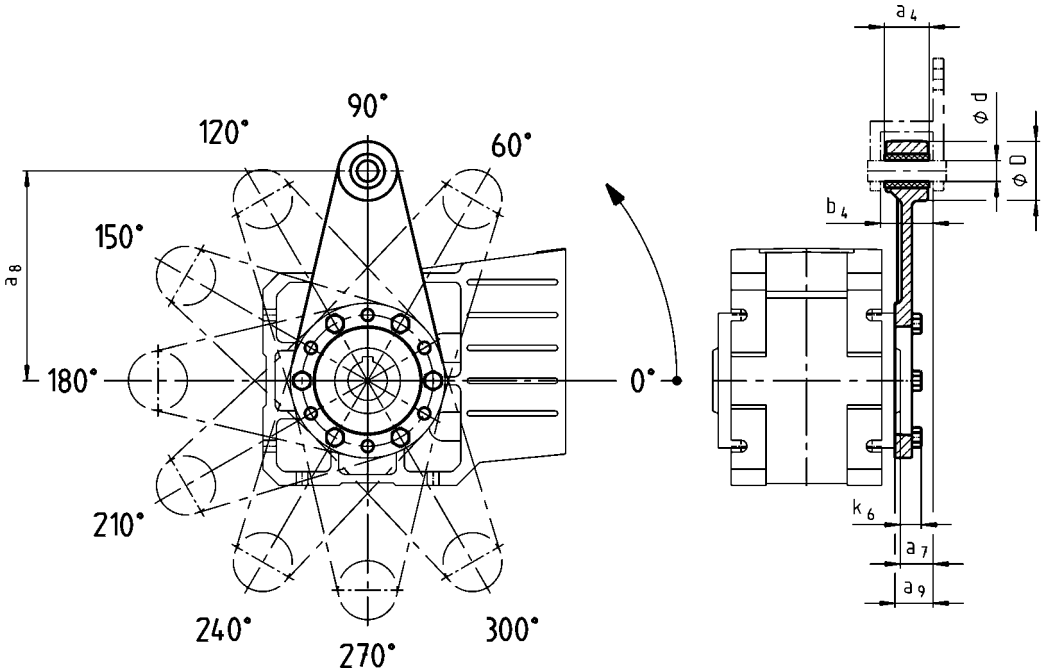

	a_4	a_7	a_8	a_9	b_4	d	D	k_6
GKR05	34	23.5	160	27.5	38.5	16	45	15
GKR06	40	28.0	200	33.0	44.5	20	50	18

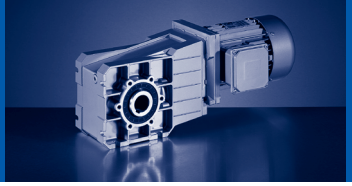

Torque plate at housing foot

In position 4 or 6

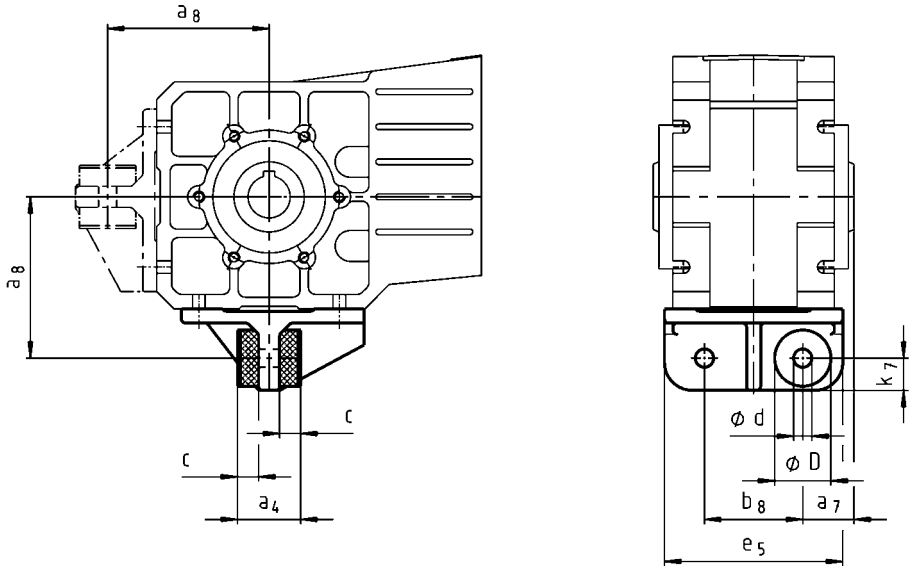

	a_4	a_7	a_8	b_8	c	d	D	e_5	k_7
GKR05	45	36.5	115	70	15.0	13	40	127	25
GKR06	72	45.0	145	80	27.0	17	50	145	30

Mounting set for hollow shaft circlip - Proposed design for auxiliary tools

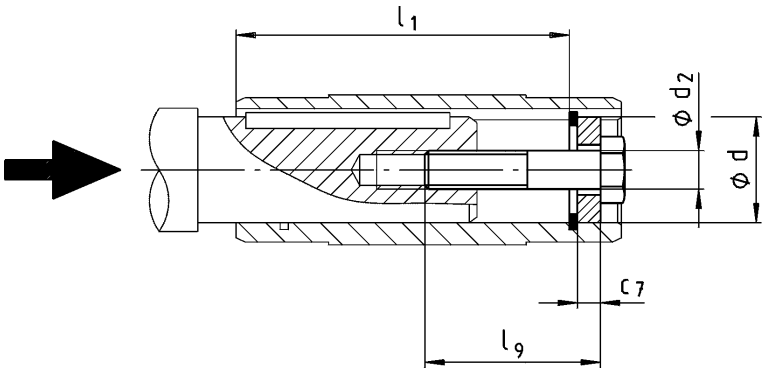

	d	l_1	d_2	l_9	c_7
	H7				
GKR03	18 20	85	M6	40	4
GKR04	20 25	105			
			M10		5
GKR05	30 35	127			6
			M12	50	7
GKR06	40 45	150	M16	60	8
					9

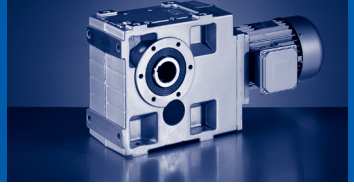

Permissible radial and axial forces at output

Permissible radial force
$F_{rad,per} = \min(f_w \times f_\alpha \times F_{rad,max}\ ;\ f_w \times F_{rad,max}$ at $n_2 \leq 16$ r/min)

Permissible axial force
$F_{ax,per} = F_{ax,max}$ if $F_{rad} = 0$

If F_{rad} **and** $F_{ax} \neq 0$; please contact Lenze.

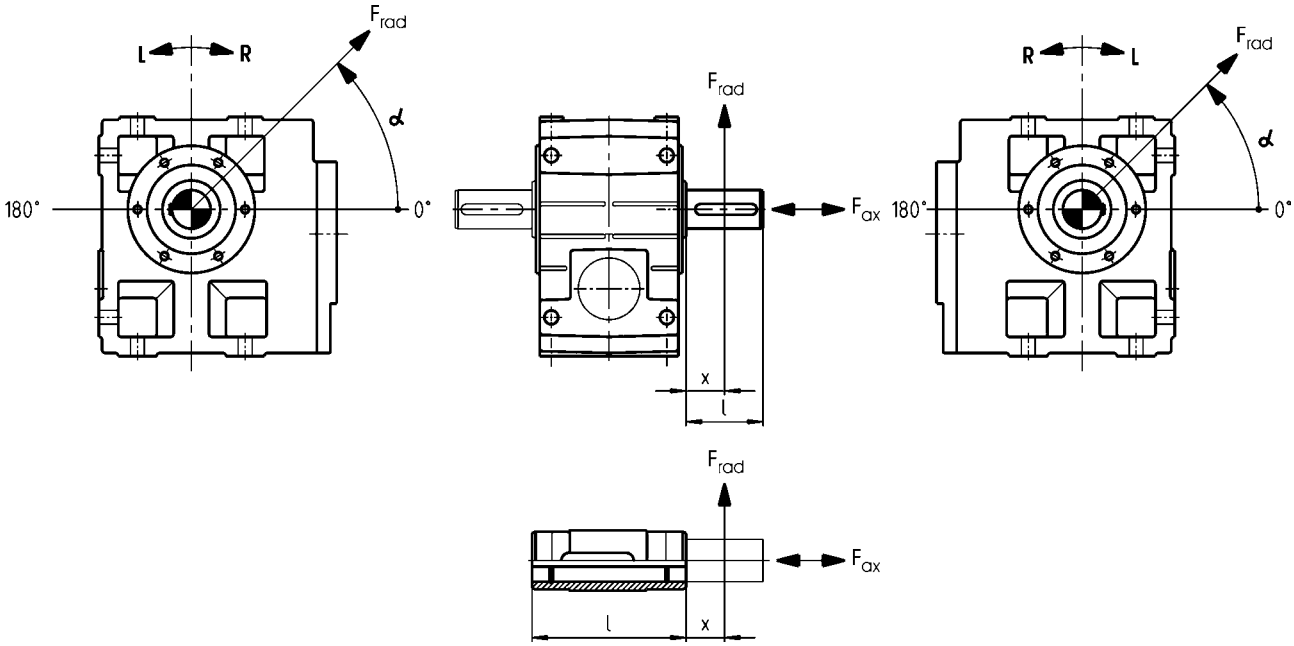

Effective direction factor f_α at output shaft

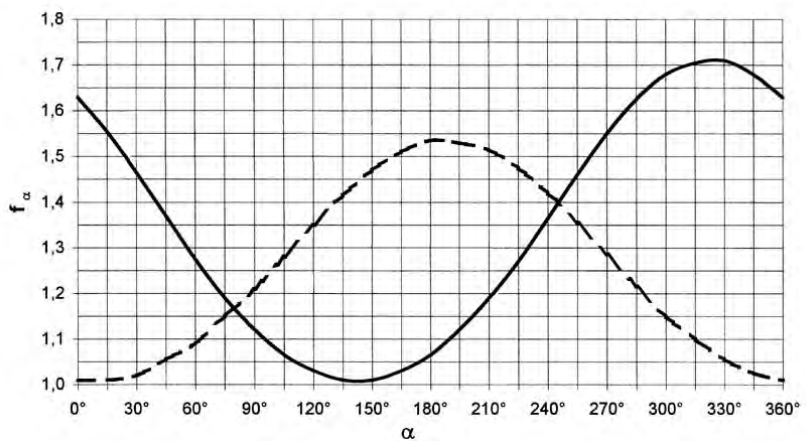

——— Direction of rotation R
— — — Direction of rotation L

Additional load factor f_w at output shaft

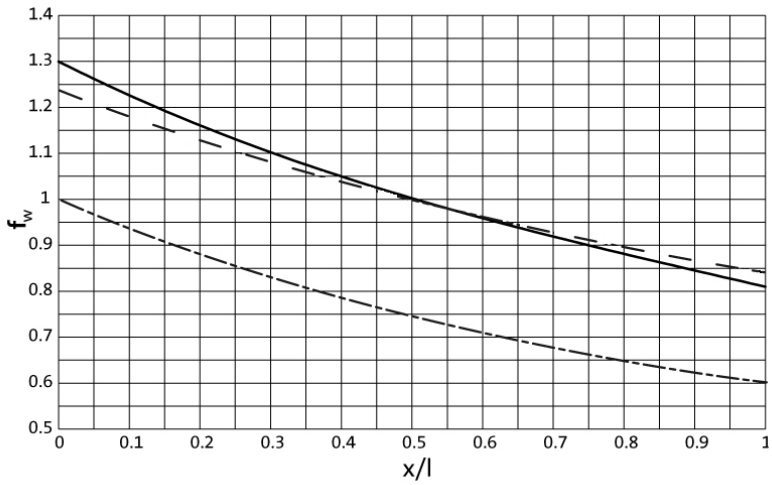

——— Solid shaft (V□□)
— — — Solid shaft with flange (V□K)
— · — Hollow shaft (H□□)

GKS□□-3/4□ H□□

Size	n_2 [r/min]								
Gearbox	630	400	250	160	100	63	40	25	≤16
	Max. radial force, Hollow shaft								
	$F_{rad,max}$ [N]	$F_{rad,max}$ [N]	$F_{rad,max}$ [N]	$F_{rad,max}$ [N]	$F_{rad,max}$ [N]	$F_{rad,max}$ [N]	$F_{rad,max}$ [N]	$F_{rad,max}$ [N]	$F_{rad,max}$ [N]
GKS04	3100	3900	4500	5100	5900	6800	7000	7000	7000
GKS05	2400	3500	4200	4630	5000	6200	7300	7300	7300
GKS06	3000	4600	5600	6400	7000	8200	10400	12000	12000
GKS07		5400	6300	7400	8700	10500	12500	15100	16000
GKS09		7500	8200	9400	10600	12200	15500	21000	24000
GKS11		9000	10000	11000	14000	16000	18500	25000	30000
GKS14		15000	15500	16500	17500	18500	21000	28000	40000
	Max. axial force, Hollow shaft								
	$F_{ax,max}$ [N]	$F_{ax,max}$ [N]	$F_{ax,max}$ [N]	$F_{ax,max}$ [N]	$F_{ax,max}$ [N]	$F_{ax,max}$ [N]	$F_{ax,max}$ [N]	$F_{ax,max}$ [N]	$F_{ax,max}$ [N]
GKS04	3300	4200	5000	5500	5500	5500	5500	5500	5500
GKS05	2800	3500	4240	5090	6160	6600	6600	6600	6600
GKS06	3500	4440	5580	6930	8710	10000	10000	10000	10000
GKS07		4900	6230	7820	9940	12600	14000	14000	14000
GKS09		6500	7400	8000	10500	13000	17000	21000	21000
GKS11		7000	8000	9200	12000	14500	18500	27000	27000
GKS14		6000	8000	10000	13000	16000	20000	28000	35000

- Application of force F_{rad}: at hollow shaft end face (x = 0)
- $F_{ax,max}$ only valid with F_{rad} = 0
- Neither radial nor axial forces are permissible for the hollow shaft with shrink disc (S□□).

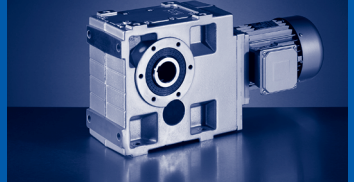

GKS□□-3/4□ V□R

Size	n_2 [r/min]								
Gearbox	630	400	250	160	100	63	40	25	≤16
	Max. radial force, Solid shaft without flange								
	$F_{rad,max}$	$F_{rad,max}$	$F_{rad,max}$	$F_{rad,max}$	$F_{rad,max}$	$F_{rad,max}$	$F_{rad,max}$	$F_{rad,max}$	$F_{rad,max}$
	[N]	[N]	[N]	[N]	[N]	[N]	[N]	[N]	[N]
GKS04	2400	3000	3400	3600	3600	3600	3600	3600	3600
GKS05	2200	2800	3200	3600	4100	4900	5800	5800	5800
GKS06	2700	3700	4300	4900	5300	6200	7900	9000	9000
GKS07		4000	4900	5800	6600	8000	9600	12000	12000
GKS09 [1]		6200	6400	7100	8400	9500	11800	16000	18000
GKS11 [1]		7100	7500	8200	10000	11200	13000	19000	23000
GKS14		57900	61000	64100	65000	65000	65000	65000	65000
	Max. axial force, Solid shaft without flange								
	$F_{ax,max}$	$F_{ax,max}$	$F_{ax,max}$	$F_{ax,max}$	$F_{ax,max}$	$F_{ax,max}$	$F_{ax,max}$	$F_{ax,max}$	$F_{ax,max}$
	[N]	[N]	[N]	[N]	[N]	[N]	[N]	[N]	[N]
GKS04	3300	4200	5000	5500	5500	5500	5500	5500	5500
GKS05	2800	3500	4240	5090	6160	6600	6600	6600	6600
GKS06	3500	4440	5580	6930	8710	10000	10000	10000	10000
GKS07		4900	6230	7820	9940	12600	14000	14000	14000
GKS09 [1]		6500	7400	8000	10500	13000	17000	21000	21000
GKS11 [1]		7000	8000	9200	12000	14500	18500	27000	27000
GKS14		35000	35000	35000	35000	35000	35000	35000	35000

[1] Reinforced output shaft bearings are available on request for V□R versions.

- Application of force F_{rad}: centre of shaft journal (x = l/2)
- $F_{ax,max}$ only valid with F_{rad} = 0

GKS□□-3/4□ V□K

Size	n_2 [r/min]								
Gearbox	630	400	250	160	100	63	40	25	≤16
	Max. radial force, Solid shaft with flange								
	$F_{rad,max}$	$F_{rad,max}$	$F_{rad,max}$	$F_{rad,max}$	$F_{rad,max}$	$F_{rad,max}$	$F_{rad,max}$	$F_{rad,max}$	$F_{rad,max}$
	[N]	[N]	[N]	[N]	[N]	[N]	[N]	[N]	[N]
GKS04	3100	3800	4300	4600	4600	4600	4600	4600	4600
GKS05	3800	4640	5420	6280	7000	7000	7000	7000	7000
GKS06	4700	6400	7500	8800	9800	10000	10000	10000	10000
GKS07		7000	8250	9630	11000	13000	14000	14000	14000
GKS09		9900	10500	12000	14000	15000	15000	15000	15000
GKS11		14500	16000	17600	21000	24500	28000	30000	30000
GKS14		20500	23700	27200	31300	35000	41000	43000	43000
	Max. axial force, Solid shaft with flange								
	$F_{ax,max}$	$F_{ax,max}$	$F_{ax,max}$	$F_{ax,max}$	$F_{ax,max}$	$F_{ax,max}$	$F_{ax,max}$	$F_{ax,max}$	$F_{ax,max}$
	[N]	[N]	[N]	[N]	[N]	[N]	[N]	[N]	[N]
GKS04	3300	4200	4400	4400	4400	4400	4400	4400	4400
GKS05	2900	3630	4440	5420	6600	6600	6600	6600	6600
GKS06	3700	4660	5880	7320	9230	10000	10000	10000	10000
GKS07		5700	7000	8500	10400	11500	11500	11500	11500
GKS09		6000	6600	7600	10000	12000	15000	17000	17000
GKS11		7000	7500	8500	10500	13000	17500	27000	27000
GKS14		8400	10000	11500	13000	15000	19000	28000	35000

- Application of force F_{rad}: centre of shaft journal (x = l/2)
- $F_{ax,max}$ only valid with F_{rad} = 0

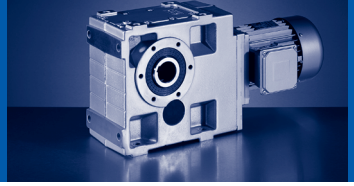

Output backlash in angular minutes

► Backlash φ depending on ratio i

GKS04...14-3

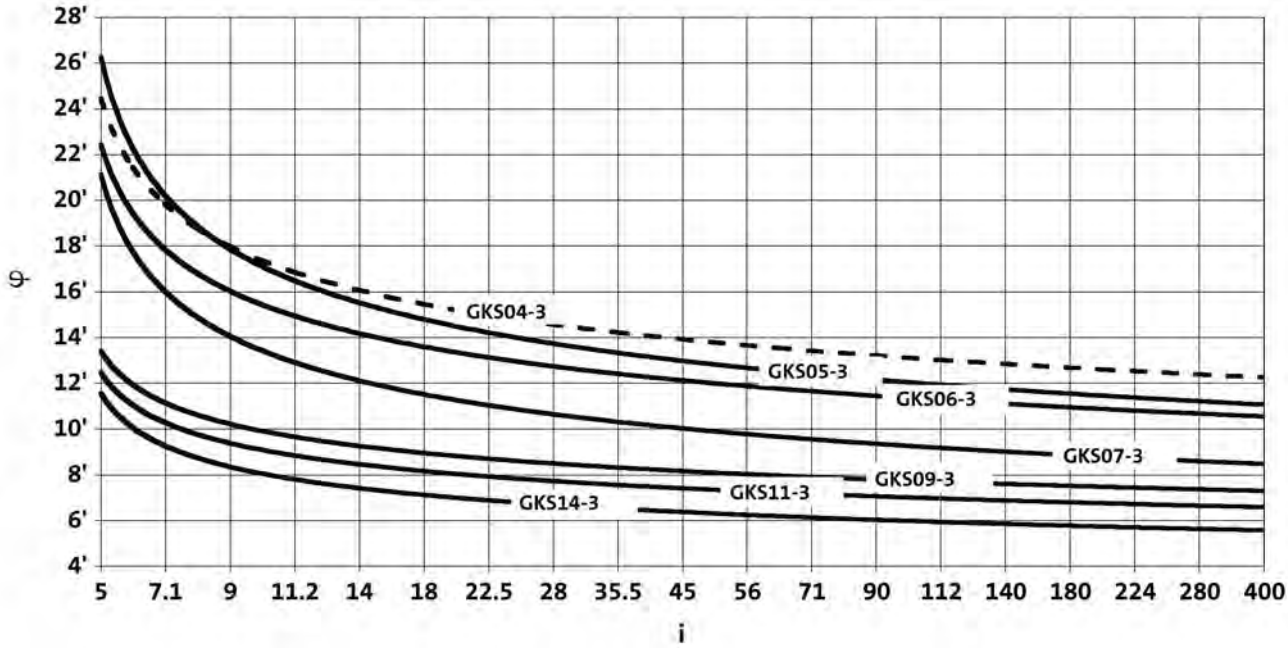

GKS05...14-4

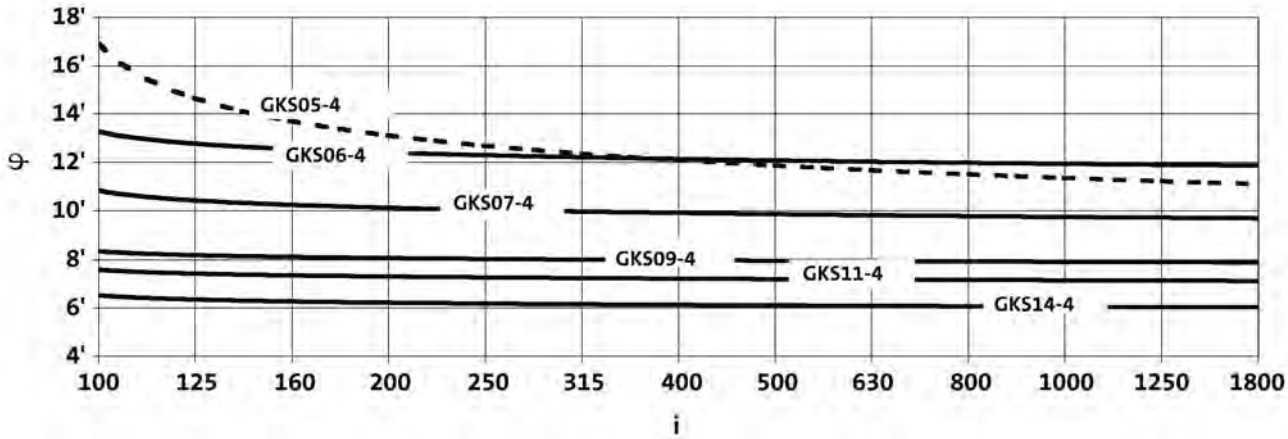

GKS□□-3

► Moment of inertia (J) depending on ratio i

Gearbox			GKS04
5.123	J	[kgcm²]	1.170
7.025	J	[kgcm²]	0.676
8.167	J	[kgcm²]	0.863
8.991	J	[kgcm²]	0.444
11.730	J	[kgcm²]	0.729
13.067	J	[kgcm²]	0.701
14.333	J	[kgcm²]	0.346
16.087	J	[kgcm²]	0.443
17.920	J	[kgcm²]	0.428
20.588	J	[kgcm²]	0.302
22.522	J	[kgcm²]	0.262
25.088	J	[kgcm²]	0.254
28.727	J	[kgcm²]	0.182
32.000	J	[kgcm²]	0.177
35.191	J	[kgcm²]	0.136
39.200	J	[kgcm²]	0.132
44.240	J	[kgcm²]	0.090
50.943	J	[kgcm²]	0.181
56.976	J	[kgcm²]	0.061
64.978	J	[kgcm²]	0.132
72.210	J	[kgcm²]	0.040
79.598	J	[kgcm²]	0.103
90.491	J	[kgcm²]	0.027
100.067	J	[kgcm²]	0.069
111.467	J	[kgcm²]	0.069
128.874	J	[kgcm²]	0.048
143.556	J	[kgcm²]	0.048
163.332	J	[kgcm²]	0.032
181.939	J	[kgcm²]	0.032
204.682	J	[kgcm²]	0.022
228.000	J	[kgcm²]	0.022
269.660	J	[kgcm²]	0.014
300.381	J	[kgcm²]	0.014

Gearbox			GKS05
6.863	J	[kgcm²]	1.900
9.412	J	[kgcm²]	1.170
10.569	J	[kgcm²]	1.600
11.667	J	[kgcm²]	1.647
13.176	J	[kgcm²]	0.711
14.494	J	[kgcm²]	1.045
16.000	J	[kgcm²]	1.040
17.054	J	[kgcm²]	1.505
19.216	J	[kgcm²]	1.474
23.388	J	[kgcm²]	0.964
26.353	J	[kgcm²]	0.948
29.931	J	[kgcm²]	0.674
32.744	J	[kgcm²]	0.584
36.894	J	[kgcm²]	0.576
41.765	J	[kgcm²]	0.419
47.059	J	[kgcm²]	0.414
51.162	J	[kgcm²]	0.321
57.647	J	[kgcm²]	0.317
66.592	J	[kgcm²]	0.200
75.033	J	[kgcm²]	0.198
82.833	J	[kgcm²]	0.145
93.333	J	[kgcm²]	0.144
107.196	J	[kgcm²]	0.091
120.784	J	[kgcm²]	0.091
130.097	J	[kgcm²]	0.067
146.588	J	[kgcm²]	0.066
166.276	J	[kgcm²]	0.043
187.353	J	[kgcm²]	0.042
211.200	J	[kgcm²]	0.081
227.484	J	[kgcm²]	0.060
256.320	J	[kgcm²]	0.060
290.745	J	[kgcm²]	0.038
327.600	J	[kgcm²]	0.038

► The moments of inertia relate to the drive shaft of the gearbox.
► The total moment of inertia is calculated by adding the values of gearbox, motor and accessories.

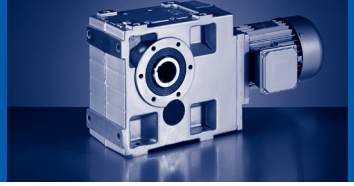

► Moment of inertia (J) depending on ratio i

Gearbox			GKS06
6.485	J	[kgcm²]	5.870
9.196	J	[kgcm²]	5.048
10.147	J	[kgcm²]	4.858
11.382	J	[kgcm²]	2.492
12.612	J	[kgcm²]	3.199
14.824	J	[kgcm²]	4.287
16.699	J	[kgcm²]	4.163
17.809	J	[kgcm²]	2.126
20.329	J	[kgcm²]	2.794
22.902	J	[kgcm²]	2.729
26.017	J	[kgcm²]	1.941
28.461	J	[kgcm²]	1.666
32.063	J	[kgcm²]	1.632
36.303	J	[kgcm²]	1.183
41.472	J	[kgcm²]	2.110
44.471	J	[kgcm²]	0.900
53.074	J	[kgcm²]	1.523
57.882	J	[kgcm²]	0.578
65.207	J	[kgcm²]	0.570
72.000	J	[kgcm²]	0.422
81.111	J	[kgcm²]	0.416
93.176	J	[kgcm²]	0.257
104.967	J	[kgcm²]	0.254
113.082	J	[kgcm²]	0.189
127.392	J	[kgcm²]	0.186
142.941	J	[kgcm²]	0.122
161.029	J	[kgcm²]	0.121
190.080	J	[kgcm²]	0.227
214.133	J	[kgcm²]	0.226
230.688	J	[kgcm²]	0.168
259.880	J	[kgcm²]	0.167
291.600	J	[kgcm²]	0.109
328.500	J	[kgcm²]	0.109

Gearbox			GKS07
5.955	J	[kgcm²]	19.300
8.254	J	[kgcm²]	11.800
9.171	J	[kgcm²]	16.000
10.124	J	[kgcm²]	15.882
11.378	J	[kgcm²]	7.019
12.711	J	[kgcm²]	10.164
14.798	J	[kgcm²]	14.306
16.674	J	[kgcm²]	13.965
17.270	J	[kgcm²]	7.258
20.511	J	[kgcm²]	9.084
23.111	J	[kgcm²]	8.906
25.244	J	[kgcm²]	6.716
28.274	J	[kgcm²]	5.567
31.858	J	[kgcm²]	5.473
36.063	J	[kgcm²]	3.650
40.906	J	[kgcm²]	6.934
44.178	J	[kgcm²]	2.779
50.345	J	[kgcm²]	5.298
57.501	J	[kgcm²]	1.748
64.790	J	[kgcm²]	1.725
70.474	J	[kgcm²]	1.295
79.407	J	[kgcm²]	1.280
92.563	J	[kgcm²]	0.808
104.296	J	[kgcm²]	0.799
112.338	J	[kgcm²]	0.592
126.578	J	[kgcm²]	0.586
140.548	J	[kgcm²]	1.113
158.364	J	[kgcm²]	1.113
184.600	J	[kgcm²]	0.687
208.000	J	[kgcm²]	0.685
224.037	J	[kgcm²]	0.510
252.436	J	[kgcm²]	0.509
283.193	J	[kgcm²]	0.330
319.091	J	[kgcm²]	0.329

► The moments of inertia relate to the drive shaft of the gearbox.
► The total moment of inertia is calculated by adding the values of gearbox, motor and accessories.

► Moment of inertia (J) depending on ratio i

Gearbox			GKS09
12.283	J	[kgcm²]	34.200
13.360	J	[kgcm²]	33.400
16.122	J	[kgcm²]	22.600
17.536	J	[kgcm²]	22.200
19.541	J	[kgcm²]	30.600
22.022	J	[kgcm²]	29.900
25.649	J	[kgcm²]	20.500
29.228	J	[kgcm²]	15.900
32.940	J	[kgcm²]	15.600
35.193	J	[kgcm²]	12.200
39.662	J	[kgcm²]	12.000
43.146	J	[kgcm²]	9.000
48.625	J	[kgcm²]	8.870
58.456	J	[kgcm²]	5.540
65.879	J	[kgcm²]	5.470
70.982	J	[kgcm²]	4.140
79.996	J	[kgcm²]	4.100
91.860	J	[kgcm²]	2.630
103.524	J	[kgcm²]	2.610
111.484	J	[kgcm²]	1.920
125.641	J	[kgcm²]	1.900
140.921	J	[kgcm²]	1.260
158.816	J	[kgcm²]	1.250
182.000	J	[kgcm²]	2.250
205.111	J	[kgcm²]	2.240
220.882	J	[kgcm²]	1.660
248.930	J	[kgcm²]	1.650
279.205	J	[kgcm²]	1.100
314.659	J	[kgcm²]	1.100

Gearbox			GKS11
12.094	J	[kgcm²]	104.000
13.154	J	[kgcm²]	101.000
15.874	J	[kgcm²]	68.000
17.265	J	[kgcm²]	66.500
19.515	J	[kgcm²]	90.300
21.989	J	[kgcm²]	90.400
25.615	J	[kgcm²]	61.200
28.021	J	[kgcm²]	52.200
31.573	J	[kgcm²]	51.300
35.741	J	[kgcm²]	36.800
40.272	J	[kgcm²]	36.200
43.783	J	[kgcm²]	27.900
49.333	J	[kgcm²]	27.500
57.683	J	[kgcm²]	17.700
64.995	J	[kgcm²]	17.500
70.887	J	[kgcm²]	13.000
79.873	J	[kgcm²]	12.900
91.737	J	[kgcm²]	8.300
103.365	J	[kgcm²]	8.210
111.335	J	[kgcm²]	6.050
125.448	J	[kgcm²]	5.990
140.732	J	[kgcm²]	3.960
158.571	J	[kgcm²]	3.930
186.572	J	[kgcm²]	7.070
210.222	J	[kgcm²]	7.050
226.431	J	[kgcm²]	5.210
255.133	J	[kgcm²]	5.200
286.219	J	[kgcm²]	3.440
322.500	J	[kgcm²]	3.430

► The moments of inertia relate to the drive shaft of the gearbox.
► The total moment of inertia is calculated by adding the values of gearbox, motor and accessories.

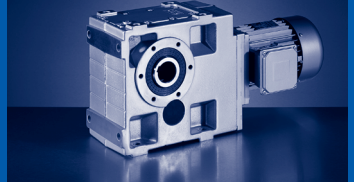

► Moment of inertia (J) depending on ratio i

Gearbox			GKS14
12.435	J	[kgcm²]	283.000
13.525	J	[kgcm²]	275.000
16.646	J	[kgcm²]	198.000
18.311	J	[kgcm²]	173.000
20.065	J	[kgcm²]	249.000
22.609	J	[kgcm²]	243.000
24.696	J	[kgcm²]	183.000
27.165	J	[kgcm²]	159.000
30.609	J	[kgcm²]	156.000
34.692	J	[kgcm²]	111.000
39.089	J	[kgcm²]	109.000
42.531	J	[kgcm²]	82.400
47.923	J	[kgcm²]	81.100
56.251	J	[kgcm²]	54.200
63.382	J	[kgcm²]	53.500
68.942	J	[kgcm²]	38.900
77.681	J	[kgcm²]	38.400
90.551	J	[kgcm²]	25.100
102.029	J	[kgcm²]	24.900
109.896	J	[kgcm²]	18.300
123.826	J	[kgcm²]	18.100
138.913	J	[kgcm²]	12.000
156.522	J	[kgcm²]	11.900
186.572	J	[kgcm²]	21.600
210.222	J	[kgcm²]	21.500
226.431	J	[kgcm²]	15.900
255.133	J	[kgcm²]	15.800
286.219	J	[kgcm²]	10.500
322.500	J	[kgcm²]	10.500

► The moments of inertia relate to the drive shaft of the gearbox.
► The total moment of inertia is calculated by adding the values of gearbox, motor and accessories.

GKS□□-4

► Moment of inertia (J) depending on ratio i

Gearbox			GKS05
95.238	J	[kgcm²]	0.143
114.987	J	[kgcm²]	0.196
126.933	J	[kgcm²]	0.196
146.667	J	[kgcm²]	0.142
161.905	J	[kgcm²]	0.141
185.547	J	[kgcm²]	0.195
209.067	J	[kgcm²]	0.195
225.867	J	[kgcm²]	0.073
236.667	J	[kgcm²]	0.141
289.917	J	[kgcm²]	0.108
326.667	J	[kgcm²]	0.108
364.467	J	[kgcm²]	0.073
410.667	J	[kgcm²]	0.073
469.389	J	[kgcm²]	0.050
510.000	J	[kgcm²]	0.023
528.889	J	[kgcm²]	0.050
594.894	J	[kgcm²]	0.033
670.303	J	[kgcm²]	0.033
820.760	J	[kgcm²]	0.050
924.800	J	[kgcm²]	0.050
1040.215	J	[kgcm²]	0.033
1172.073	J	[kgcm²]	0.033
1303.560	J	[kgcm²]	0.023
1468.800	J	[kgcm²]	0.023
1717.389	J	[kgcm²]	0.014
1935.086	J	[kgcm²]	0.014

Gearbox			GKS06
103.721	J	[kgcm²]	0.300
113.205	J	[kgcm²]	0.234
127.059	J	[kgcm²]	0.264
140.816	J	[kgcm²]	0.213
155.647	J	[kgcm²]	0.191
174.336	J	[kgcm²]	0.112
202.588	J	[kgcm²]	0.168
224.524	J	[kgcm²]	0.074
252.000	J	[kgcm²]	0.155
279.286	J	[kgcm²]	0.069
316.800	J	[kgcm²]	0.102
361.429	J	[kgcm²]	0.064
408.000	J	[kgcm²]	0.068
458.067	J	[kgcm²]	0.042
517.091	J	[kgcm²]	0.044
555.927	J	[kgcm²]	0.041
640.800	J	[kgcm²]	0.062
696.668	J	[kgcm²]	0.028
812.137	J	[kgcm²]	0.040
914.907	J	[kgcm²]	0.040
1017.741	J	[kgcm²]	0.028
1146.529	J	[kgcm²]	0.028
1340.834	J	[kgcm²]	0.017
1510.507	J	[kgcm²]	0.017

► The moments of inertia relate to the drive shaft of the gearbox.
► The total moment of inertia is calculated by adding the values of gearbox, motor and accessories.

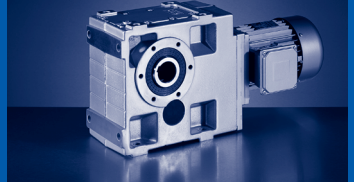

► Moment of inertia (J) depending on ratio i

Gearbox			GKS07
103.039	J	[kgcm²]	0.837
112.391	J	[kgcm²]	0.632
126.222	J	[kgcm²]	0.729
137.748	J	[kgcm²]	0.571
154.622	J	[kgcm²]	0.527
179.201	J	[kgcm²]	0.283
201.254	J	[kgcm²]	0.454
222.909	J	[kgcm²]	0.199
246.659	J	[kgcm²]	0.417
273.199	J	[kgcm²]	0.184
321.049	J	[kgcm²]	0.256
358.829	J	[kgcm²]	0.169
399.353	J	[kgcm²]	0.182
464.367	J	[kgcm²]	0.106
516.810	J	[kgcm²]	0.113
563.572	J	[kgcm²]	0.101
636.581	J	[kgcm²]	0.161
683.972	J	[kgcm²]	0.074
823.810	J	[kgcm²]	0.101
928.237	J	[kgcm²]	0.101
999.806	J	[kgcm²]	0.073
1126.542	J	[kgcm²]	0.073
1277.842	J	[kgcm²]	0.047
1439.822	J	[kgcm²]	0.047

Gearbox			GKS09
100.551	J	[kgcm²]	2.480
113.320	J	[kgcm²]	2.456
123.275	J	[kgcm²]	2.107
138.929	J	[kgcm²]	2.091
151.012	J	[kgcm²]	1.516
170.188	J	[kgcm²]	1.505
204.596	J	[kgcm²]	1.244
230.577	J	[kgcm²]	1.239
248.439	J	[kgcm²]	1.128
279.986	J	[kgcm²]	1.125
323.365	J	[kgcm²]	0.713
364.427	J	[kgcm²]	0.710
402.234	J	[kgcm²]	0.509
453.311	J	[kgcm²]	0.507
520.538	J	[kgcm²]	0.466
586.638	J	[kgcm²]	0.465
631.744	J	[kgcm²]	0.443
711.965	J	[kgcm²]	0.443
817.551	J	[kgcm²]	0.276
921.367	J	[kgcm²]	0.276
992.209	J	[kgcm²]	0.201
1118.204	J	[kgcm²]	0.201
1254.197	J	[kgcm²]	0.130
1413.461	J	[kgcm²]	0.130

► The moments of inertia relate to the drive shaft of the gearbox.
► The total moment of inertia is calculated by adding the values of gearbox, motor and accessories.

► Moment of inertia (J) depending on ratio i

Gearbox			GKS11
102.119	J	[kgcm²]	7.276
115.063	J	[kgcm²]	7.205
125.095	J	[kgcm²]	6.233
140.952	J	[kgcm²]	6.186
153.242	J	[kgcm²]	4.500
172.667	J	[kgcm²]	4.469
201.890	J	[kgcm²]	3.735
227.481	J	[kgcm²]	3.717
248.106	J	[kgcm²]	3.355
279.556	J	[kgcm²]	3.343
322.931	J	[kgcm²]	2.088
363.866	J	[kgcm²]	2.081
395.787	J	[kgcm²]	1.521
445.958	J	[kgcm²]	1.517
512.196	J	[kgcm²]	1.385
577.122	J	[kgcm²]	1.382
621.619	J	[kgcm²]	1.314
700.416	J	[kgcm²]	1.312
816.455	J	[kgcm²]	0.819
919.949	J	[kgcm²]	0.818
990.879	J	[kgcm²]	0.600
1116.484	J	[kgcm²]	0.599
1252.516	J	[kgcm²]	0.386
1411.286	J	[kgcm²]	0.385

Gearbox			GKS14
97.467	J	[kgcm²]	23.471
109.822	J	[kgcm²]	23.232
119.493	J	[kgcm²]	19.936
134.640	J	[kgcm²]	19.777
158.039	J	[kgcm²]	16.438
178.072	J	[kgcm²]	16.348
193.754	J	[kgcm²]	12.076
218.315	J	[kgcm²]	12.016
237.467	J	[kgcm²]	10.871
267.568	J	[kgcm²]	10.830
321.729	J	[kgcm²]	6.420
362.512	J	[kgcm²]	6.398
390.671	J	[kgcm²]	4.749
440.193	J	[kgcm²]	4.734
513.121	J	[kgcm²]	4.330
578.164	J	[kgcm²]	4.322
622.742	J	[kgcm²]	4.122
701.681	J	[kgcm²]	4.116
805.901	J	[kgcm²]	2.620
908.058	J	[kgcm²]	2.617
978.071	J	[kgcm²]	1.912
1102.052	J	[kgcm²]	1.909
1236.326	J	[kgcm²]	1.259
1393.043	J	[kgcm²]	1.258

► The moments of inertia relate to the drive shaft of the gearbox.
► The total moment of inertia is calculated by adding the values of gearbox, motor and accessories.

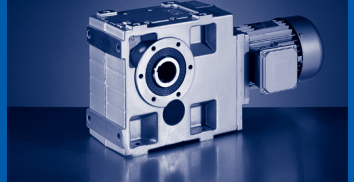

Position of ventilation, sealing elements and oil level check

GKS05...14-3

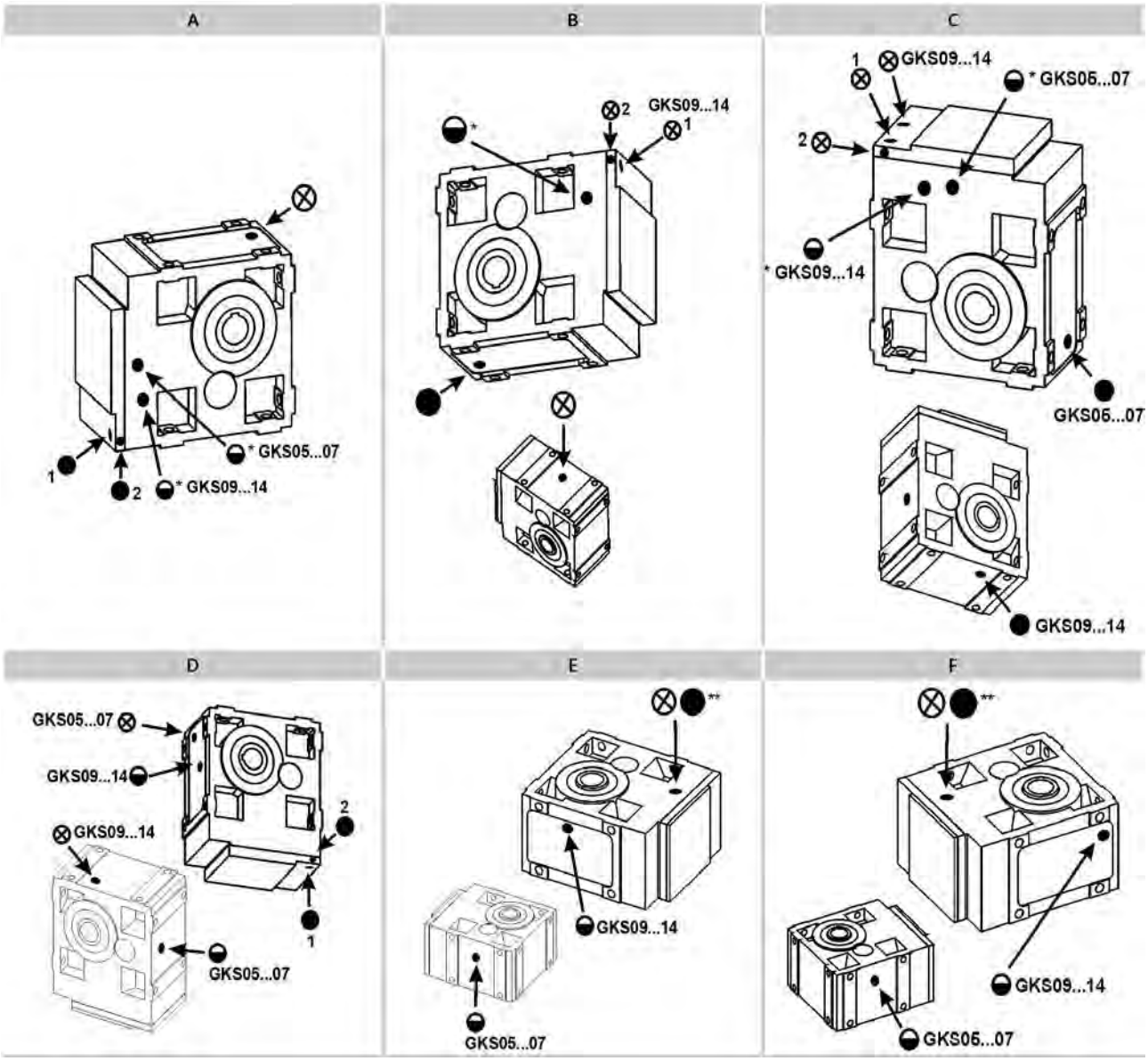

A ... F Mounting position
⊗ Ventilation / Oil filler plug
● Oil drain plug
◒ Oil control plug
* On both sides
** On opposite side

Item 1 standard
Item 2 only with:
- GKS05-3M □□□ 090C□□
- GKS05-3M □□□ 100C□□
- GKS06-3M □□□ 112C□□
- GKS07-3M □□□ 160C□□

GKS05...14-4

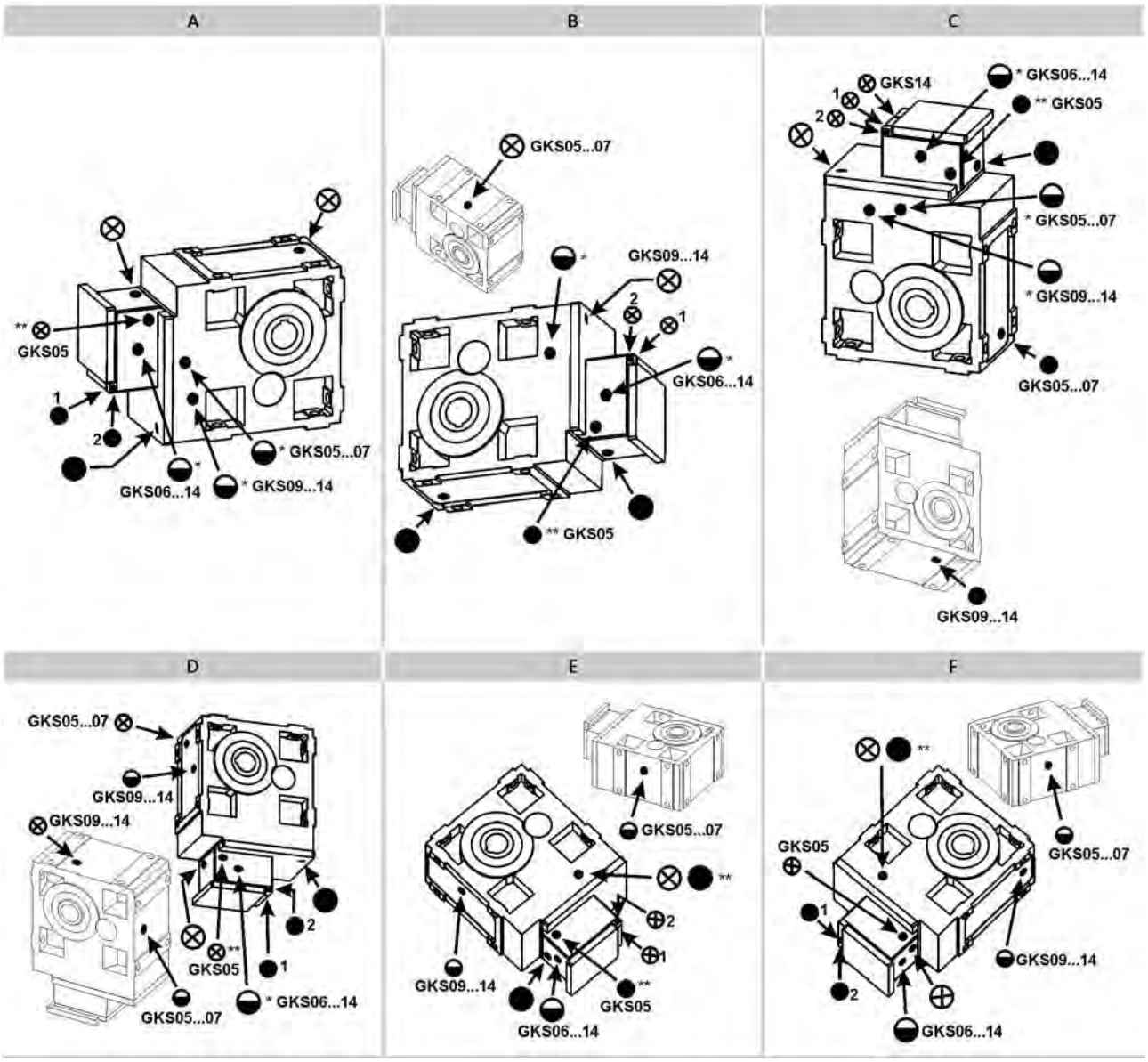

A ... F Mounting position
⊗ Ventilation / Oil filler plug
● Oil drain plug
◒ Oil control plug
* On both sides
** On opposite side

Item 1 standard
Item 2 only with:
- GKS07-4M □□□ 090C□□
- GKS07-4M □□□ 100C□□
- GKS09-4M □□□ 112C□□

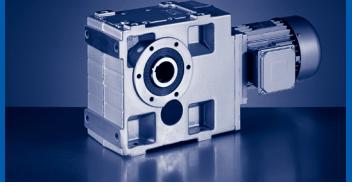

Compensation reservoir for mounting position C

GKS□□-3

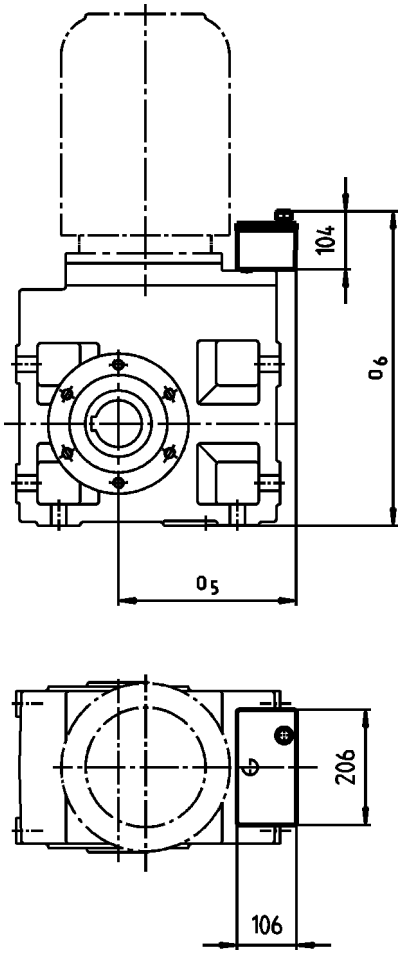

Motor	090 100		112		132		160 180 225	
	o_5	o_6	o_5	o_6	o_5	o_6	o_5	o_6
	[mm]	[mm]	[mm]	[mm]	[mm]	[mm]	[mm]	[mm]
GKS09	243	533	265	533	282	533	297	533
GKS11	258	626	280	630	304	630	318	630
GKS14			313	739	343	739	343	739

► Terminal box position 4 not permitted.

GKS□□-3M HAR / HBR

			063C11 063C12	063C31	063C32	063C42	071C11 071C13 071C31 071C32 071C33 071C42	080C11	080C13	080C31	080C32 080C33 080C42	090C11 090C31	090C32	100C12	100C31	100C32
GKS04	m	[kg]	16	15	16		18	22	23	22	23	30	28			
GKS05	m	[kg]				26	28	32	33	32	33	40	38	47	44	47
GKS06	m	[kg]				40	42	46	47	46	47	54	52	61	58	61
GKS07	m	[kg]						72	73	72	73	80	78	87	84	87
GKS09	m	[kg]										128	126	135	132	135
GKS11	m	[kg]												235	232	235

			100C41	112C22	112C31	112C32	112C41	132C21	132C22 132C32	160C22	160C32	180C12	180C32	180C42	225C12	225C22
GKS05	m	[kg]	44													
GKS06	m	[kg]	58	70	67	77	74									
GKS07	m	[kg]	84	95	92	102	99	134	132	176	196					
GKS09	m	[kg]	132	143	140	150	147	183	181	225	245	280	290			
GKS11	m	[kg]	232	242	239	249	246	281	279	323	343	378	388	413	537	562
GKS14	m	[kg]		413	410	420	417	449	447	491	511	546	556	581	704	729

GKS□□-3M HAK

			063C11 063C12 063C31 063C32	063C42	071C11	071C13 071C31	071C32	071C33 071C42	080C11	080C13	080C31	080C32 080C33 080C42	090C11 090C31	090C32	100C12	100C31
GKS04	m	[kg]	18	19	20	21	20	21	25	26	25	26	32	30		
GKS05	m	[kg]		30	32				36	37	36	37	44	42	51	48
GKS06	m	[kg]		47	49				53	54	53	54	61	59	68	65
GKS07	m	[kg]							83	84	83	84	91	89	98	95
GKS09	m	[kg]											144	142	151	148
GKS11	m	[kg]													259	256

			100C32	100C41	112C22	112C31	112C32	112C41	132C21	132C22 132C32	160C22	160C32	180C12	180C32	180C42	225C12	225C22
GKS05	m	[kg]	51	48													
GKS06	m	[kg]	68	65	77	74	84	81									
GKS07	m	[kg]	98	95	106	103	113	110	145	143	187	207					
GKS09	m	[kg]	151	148	159	156	166	163	199	197	241	261	296	306			
GKS11	m	[kg]	259	256	266	263	273	270	305	303	347	367	402	412	437	561	586
GKS14	m	[kg]			446	443	453	450	482	480	524	544	579	589	614	737	762

► Weights with oil filling for mounting position A; all values are approximate.
The weights relate to the basic version. Bear in mind that additional weights may be needed (e.g. for motor options).

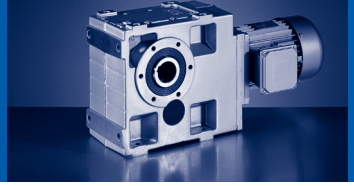

GKS□□-3M VAR / VBR

			063C11 063C12 063C31 063C32	063C42	071C11	071C13 071C31	071C32	071C33 071C42	080C11	080C13	080C31	080C32 080C33 080C42	090C11 090C31	090C32	100C12	100C31
GKS04	m	[kg]	16	17	18	19	18	19	23	24	23	24	30	28		
GKS05	m	[kg]		27	29				33	34	33	34	41	39	48	45
GKS06	m	[kg]		43	44	45	44	45	48	49	48	49	57	55	64	61
GKS07	m	[kg]							77	78	77	78	85	83	92	89
GKS09	m	[kg]											136	134	143	140
GKS11	m	[kg]													251	248

			100C32	100C41	112C22	112C31	112C32	112C41	132C21	132C22 132C32	160C22	160C32	180C12	180C32	180C42	225C12	225C22
GKS05	m	[kg]	48	45													
GKS06	m	[kg]	64	61	72	69	79	76									
GKS07	m	[kg]	92	89	100	97	107	104	139	137	181	201					
GKS09	m	[kg]	143	140	151	148	158	155	191	189	233	253	288	298			
GKS11	m	[kg]	251	248	258	255	265	262	297	295	339	359	394	404	429	553	578
GKS14	m	[kg]			446	443	453	450	482	480	524	544	579	589	614	737	762

GKS□□-3M VAK

			063C11 063C12 063C31 063C32	063C42	071C11	071C13 071C31	071C32	071C33 071C42	080C11	080C13	080C31	080C32 080C33 080C42	090C11 090C31	090C32	100C12	100C31
GKS04	m	[kg]	19		21				25	26	25	26	33	31		
GKS05	m	[kg]		31	33				37	38	37	38	45	43	52	49
GKS06	m	[kg]		50	51	52	51	52	55	56	55	56	64	62	71	68
GKS07	m	[kg]							88	89	88	89	96	94	103	100
GKS09	m	[kg]											152	150	159	156
GKS11	m	[kg]													275	272

			100C32	100C41	112C22	112C31	112C32	112C41	132C21	132C22 132C32	160C22	160C32	180C12	180C32	180C42	225C12	225C22
GKS05	m	[kg]	52	49													
GKS06	m	[kg]	71	68	79	76	86	83									
GKS07	m	[kg]	103	100	111	108	118	115	150	148	192	212					
GKS09	m	[kg]	159	156	167	164	174	171	207	205	249	269	304	314			
GKS11	m	[kg]	275	272	282	279	289	286	321	319	363	383	418	428	453	577	602
GKS14	m	[kg]			479	476	486	483	515	513	557	577	612	622	647	770	795

► Weights with oil filling for mounting position A; all values are approximate.
The weights relate to the basic version. Bear in mind that additional weights may be needed (e.g. for motor options).

GKS□□-3M SAR / SBR

			063C11 063C12 063C31 063C32	063C42	071C11	071C13 071C31	071C32	071C33 071C42	080C11	080C13	080C31	080C32 080C33 080C42	090C11 090C31	090C32	100C12	100C31
GKS04	m	[kg]	16	17	18	19	18	19	23	24	23	24	30	28		
GKS05	m	[kg]		27	29		28	29	33	34	33	34	41	39	48	45
GKS06	m	[kg]		41	43				47	48	47	48	55	53	62	59
GKS07	m	[kg]							73	74	73	74	81	79	88	85
GKS09	m	[kg]											131	129	138	135
GKS11	m	[kg]													240	237

			100C32	100C41	112C22	112C31	112C32	112C41	132C21	132C22 132C32	160C22	160C32	180C12	180C32	180C42	225C12	225C22
GKS05	m	[kg]	48	45													
GKS06	m	[kg]	62	59	71	68	78	75									
GKS07	m	[kg]	88	85	97	94	104	101	135	133	177	197					
GKS09	m	[kg]	138	135	146	143	153	150	186	184	228	248	283	293			
GKS11	m	[kg]	240	237	247	244	254	251	286	284	328	348	383	393	418	542	567
GKS14	m	[kg]			424	421	431	428	460	458	502	522	557	567	592	715	740

GKS□□-3M SAK

			063C11 063C12 063C31 063C32	063C42	071C11 071C13 071C31	071C32	071C33 071C42	080C11	080C13	080C31	080C32 080C33 080C42	090C11 090C31	090C32	100C12	100C31	100C32
GKS04	m	[kg]	19		21			25	26	25	26	33	31			
GKS05	m	[kg]		31	33	32	33	37	38	37	38	45	43	52	49	52
GKS06	m	[kg]		48	50			54	55	54	55	62	60	69	66	69
GKS07	m	[kg]						84	85	84	85	92	90	99	96	99
GKS09	m	[kg]										147	145	154	151	154
GKS11	m	[kg]												264	261	264

			100C41	112C22	112C31	112C32	112C41	132C21	132C22 132C32	160C22	160C32	180C12	180C32	180C42	225C12	225C22
GKS05	m	[kg]	49													
GKS06	m	[kg]	66	78	75	85	82									
GKS07	m	[kg]	96	108	105	115	112	146	144	188	208					
GKS09	m	[kg]	151	162	159	169	166	202	200	244	264	299	309			
GKS11	m	[kg]	261	271	268	278	275	310	308	352	372	407	417	442	566	591
GKS14	m	[kg]		457	454	464	461	493	491	535	555	590	600	625	748	773

► Weights with oil filling for mounting position A; all values are approximate.
The weights relate to the basic version. Bear in mind that additional weights may be needed (e.g. for motor options).

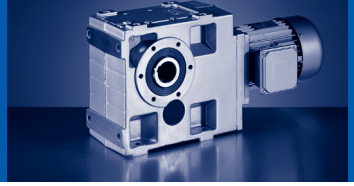

GKS□□-4M HAR / HBR

			063C11 063C12 063C31 063C32	063C42	071C11	071C13 071C31	071C32	071C33	071C42	080C11	080C13	080C31	080C32 080C33 080C42	090C11 090C31	090C32
GKS05	m	[kg]	26	27	28	29	28	29		33					
GKS06	m	[kg]	43	44	45	46	45	46		50	51	50	51	57	
GKS07	m	[kg]		74	76					80	81	80	81	88	86
GKS09	m	[kg]		127	129	130	129	130	129	133	134	133	134	141	139
GKS11	m	[kg]								241	242	241	242	249	247
GKS14	m	[kg]												434	432

			100C12	100C31	100C32	100C41	112C22	112C31	112C32	112C41	132C21	132C22 132C32	160C22	160C32	180C12
GKS07	m	[kg]	95	92		92									
GKS09	m	[kg]	148	145	148	145	157	154	164	161					
GKS11	m	[kg]	256	253	256	253	264	261	271	268	303	301			
GKS14	m	[kg]	441	438	441	438	449	446	456	453	489	487	531	551	586

GKS□□-4M HAK

			063C11 063C12 063C31 063C32	063C42	071C11	071C13 071C31	071C32	071C33	071C42	080C11	080C13	080C31	080C32 080C33 080C42	090C11 090C31	090C32
GKS05	m	[kg]	30	31	32	33	32	33		37					
GKS06	m	[kg]	50	51	52	53	52	53		57	58	57	58	64	
GKS07	m	[kg]		85	87					91	92	91	92	99	97
GKS09	m	[kg]		143	145					149	150	149	150	157	155
GKS11	m	[kg]								265	266	265	266	273	271
GKS14	m	[kg]												467	465

			100C12	100C31	100C32	100C41	112C22	112C31	112C32	112C41	132C21	132C22 132C32	160C22	160C32	180C12
GKS07	m	[kg]	106	103		103									
GKS09	m	[kg]	164	161	164	161	173	170	180	177					
GKS11	m	[kg]	280	277	280	277	288	285	295	292	327	325			
GKS14	m	[kg]	474	471	474	471	482	479	489	486	522	520	564	584	619

- Weights with oil filling for mounting position A; all values are approximate.
  The weights relate to the basic version. Bear in mind that additional weights may be needed (e.g. for motor options).

GKS□□-4M VAR / VBR

			063C11 063C12 063C31 063C32	063C42	071C11	071C13 071C31	071C32	071C33	071C42	080C11	080C13	080C31	080C32 080C33 080C42	090C11 090C31	090C32
GKS05	m	[kg]	27	28	29	30	29	30		34					
GKS06	m	[kg]	46				48			52	53	52	53	60	
GKS07	m	[kg]		79			81			85	86	85	86	93	91
GKS09	m	[kg]		135			137			141	142	141	142	149	147
GKS11	m	[kg]								257	258	257	258	265	263
GKS14	m	[kg]												467	465

			100C12	100C31	100C32	100C41	112C22	112C31	112C32	112C41	132C21	132C22 132C32	160C22	160C32	180C12
GKS07	m	[kg]	100	97		97									
GKS09	m	[kg]	156	153	156	153	165	162	172	169					
GKS11	m	[kg]	272	269	272	269	280	277	287	284	319	317			
GKS14	m	[kg]	474	471	474	471	482	479	489	486	522	520	564	584	619

GKS□□-4M VAK

			063C11 063C12 063C31 063C32	063C42	071C11	071C13 071C31	071C32	071C33	071C42	080C11	080C13	080C31	080C32 080C33 080C42	090C11 090C31	090C32
GKS05	m	[kg]	31	32	33	34	33	34		38					
GKS06	m	[kg]	53				55			59	60	59	60	67	
GKS07	m	[kg]		90			92			96	97	96	97	104	102
GKS09	m	[kg]		151			153			157	158	157	158	165	163
GKS11	m	[kg]								281	282	281	282	289	287
GKS14	m	[kg]												500	498

			100C12	100C31	100C32	100C41	112C22	112C31	112C32	112C41	132C21	132C22 132C32	160C22	160C32	180C12
GKS07	m	[kg]	111	108		108									
GKS09	m	[kg]	172	169	172	169	181	178	188	185					
GKS11	m	[kg]	296	293	296	293	304	301	311	308	343	341			
GKS14	m	[kg]	507	504	507	504	515	512	522	519	555	553	597	617	652

► Weights with oil filling for mounting position A; all values are approximate.
The weights relate to the basic version. Bear in mind that additional weights may be needed (e.g. for motor options).

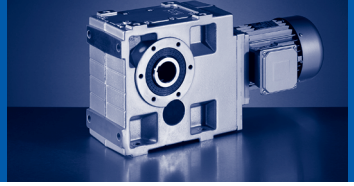

GKS□□-4M SAR / SBR

			063C11 063C12 063C31 063C32	063C42	071C11	071C13 071C31	071C32	071C33	071C42	080C11	080C13	080C31	080C32 080C33 080C42	090C11 090C31	090C32
GKS05	m	[kg]	27	28	29	30	29	30		34					
GKS06	m	[kg]	44	45	46	47	46	47		51	52	51	52	58	
GKS07	m	[kg]		75	77	78	77	78		81	82	81	82	89	87
GKS09	m	[kg]		130	132					136	137	136	137	144	142
GKS11	m	[kg]								246	247	246	247	254	252
GKS14	m	[kg]												445	443

			100C12	100C31	100C32	100C41	112C22	112C31	112C32	112C41	132C21	132C22 132C32	160C22	160C32	180C12
GKS07	m	[kg]	96	93		93									
GKS09	m	[kg]	151	148	151	148	160	157	167	164					
GKS11	m	[kg]	261	258	261	258	269	266	276	273	308	306			
GKS14	m	[kg]	452	449	452	449	460	457	467	464	500	498	542	562	597

GKS□□-4M SAK

			063C11 063C12 063C31 063C32	063C42	071C11	071C13 071C31	071C32	071C33	071C42	080C11	080C13	080C31	080C32 080C33 080C42	090C11 090C31	090C32
GKS05	m	[kg]	31	32	33	34	33	34		38					
GKS06	m	[kg]	51	52	53	54	53	54		58	59	58	59	65	
GKS07	m	[kg]		86	88	89	88	89		92	93	92	93	100	98
GKS09	m	[kg]		146	148					152	153	152	153	160	158
GKS11	m	[kg]								270	271	270	271	278	276
GKS14	m	[kg]												478	476

			100C12	100C31	100C32	100C41	112C22	112C31	112C32	112C41	132C21	132C22 132C32	160C22	160C32	180C12
GKS07	m	[kg]	107	104		104									
GKS09	m	[kg]	167	164	167	164	176	173	183	180					
GKS11	m	[kg]	285	282	285	282	293	290	300	297	332	330			
GKS14	m	[kg]	485	482	485	482	493	490	500	497	533	531	575	595	630

- Weights with oil filling for mounting position A; all values are approximate.
  The weights relate to the basic version. Bear in mind that additional weights may be needed (e.g. for motor options).

GKS□□-3M HAR / HBR

			080C32	090C12	090C32	100C12	100C32	112C22	132C12
GKS04	m	[kg]	23	29	31				
GKS05	m	[kg]	33	39	41	47	49		
GKS06	m	[kg]	47	53	55	61	64	77	99
GKS07	m	[kg]	73	79	81	87	89	102	125
GKS09	m	[kg]		127	129	135	138	150	174
GKS11	m	[kg]				235	237	249	272
GKS14	m	[kg]						420	440

			132C22	160C22	160C32	180C12	180C32	180C42	225C12	225C22
GKS06	m	[kg]	106							
GKS07	m	[kg]	132	175	190					
GKS09	m	[kg]	181	224	239	290	295			
GKS11	m	[kg]	279	322	337	388	393	413	612	632
GKS14	m	[kg]	447	490	505	556	561	581	779	799

GKS□□-3M HAK

			080C32	090C12	090C32	100C12	100C32	112C22	132C12
GKS04	m	[kg]	26	31	33				
GKS05	m	[kg]	37	43	45	51	53		
GKS06	m	[kg]	54	60	62	68	71	84	106
GKS07	m	[kg]	84	90	92	98	100	113	136
GKS09	m	[kg]		143	145	151	154	166	190
GKS11	m	[kg]				259	261	273	296
GKS14	m	[kg]						453	473

			132C22	160C22	160C32	180C12	180C32	180C42	225C12	225C22
GKS06	m	[kg]	113							
GKS07	m	[kg]	143	186	201					
GKS09	m	[kg]	197	240	255	306	311			
GKS11	m	[kg]	303	346	361	412	417	437	636	656
GKS14	m	[kg]	480	523	538	589	594	614	812	832

► Weights with oil filling for mounting position A; all values are approximate.
The weights relate to the basic version. Bear in mind that additional weights may be needed (e.g. for motor options).

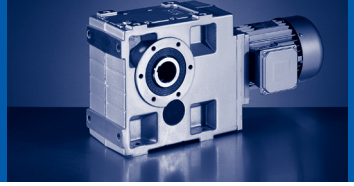

GKS□□-3M VAR / VBR

			080C32	090C12	090C32	100C12	100C32	112C22	132C12
GKS04	m	[kg]	24	29	31				
GKS05	m	[kg]	34	40	42	48	50		
GKS06	m	[kg]	49	56	58	64	66	79	101
GKS07	m	[kg]	78	84	86	92	94	107	130
GKS09	m	[kg]		135	137	143	146	158	182
GKS11	m	[kg]				251	253	265	288
GKS14	m	[kg]						453	473

			132C22	160C22	160C32	180C12	180C32	180C42	225C12	225C22
GKS06	m	[kg]	108							
GKS07	m	[kg]	137	180	195					
GKS09	m	[kg]	189	232	247	298	303			
GKS11	m	[kg]	295	338	353	404	409	429	628	648
GKS14	m	[kg]	480	523	538	589	594	614	812	832

GKS□□-3M VAK

			080C32	090C12	090C32	100C12	100C32	112C22	132C12
GKS04	m	[kg]	26	32	34				
GKS05	m	[kg]	38	44	46	52	54		
GKS06	m	[kg]	56	63	65	71	73	86	108
GKS07	m	[kg]	89	95	97	103	105	118	141
GKS09	m	[kg]		151	153	159	162	174	198
GKS11	m	[kg]				275	277	289	312
GKS14	m	[kg]						486	506

			132C22	160C22	160C32	180C12	180C32	180C42	225C12	225C22
GKS06	m	[kg]	115							
GKS07	m	[kg]	148	191	206					
GKS09	m	[kg]	205	248	263	314	319			
GKS11	m	[kg]	319	362	377	428	433	453	652	672
GKS14	m	[kg]	513	556	571	622	627	647	845	865

► Weights with oil filling for mounting position A; all values are approximate.
The weights relate to the basic version. Bear in mind that additional weights may be needed (e.g. for motor options).

GKS□□-3M SAR / SBR

			080C32	090C12	090C32	100C12	100C32	112C22	132C12
GKS04	m	[kg]	24	29	31				
GKS05	m	[kg]	34	40	42	48	50		
GKS06	m	[kg]	48	54	56	62	65	78	100
GKS07	m	[kg]	74	80	82	88	91	104	126
GKS09	m	[kg]		130	132	138	141	153	177
GKS11	m	[kg]				240	242	254	277
GKS14	m	[kg]						431	451

			132C22	160C22	160C32	180C12	180C32	180C42	225C12	225C22
GKS06	m	[kg]	107							
GKS07	m	[kg]	133	176	191					
GKS09	m	[kg]	184	227	242	293	298			
GKS11	m	[kg]	284	327	342	393	398	418	617	637
GKS14	m	[kg]	458	501	516	567	572	592	790	810

GKS□□-3M SAK

			080C32	090C12	090C32	100C12	100C32	112C22	132C12
GKS04	m	[kg]	26	32	34				
GKS05	m	[kg]	38	44	46	52	54		
GKS06	m	[kg]	55	61	63	69	72	85	107
GKS07	m	[kg]	85	91	93	99	102	115	137
GKS09	m	[kg]		146	148	154	157	169	193
GKS11	m	[kg]				264	266	278	301
GKS14	m	[kg]						464	484

			132C22	160C22	160C32	180C12	180C32	180C42	225C12	225C22
GKS06	m	[kg]	114							
GKS07	m	[kg]	144	187	202					
GKS09	m	[kg]	200	243	258	309	314			
GKS11	m	[kg]	308	351	366	417	422	442	641	661
GKS14	m	[kg]	491	534	549	600	605	625	823	843

► Weights with oil filling for mounting position A; all values are approximate.
The weights relate to the basic version. Bear in mind that additional weights may be needed (e.g. for motor options).

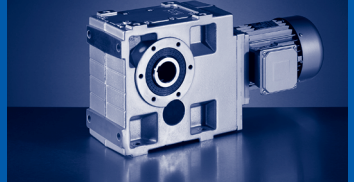

GKS□□-4M HAR / HBR

			080C32	090C12	090C32	100C12	100C32
GKS06	m	[kg]	51	56			
GKS07	m	[kg]	81	87	89	95	
GKS09	m	[kg]	134	140	142	148	151
GKS11	m	[kg]	242	248	250	256	258
GKS14	m	[kg]		433	435	441	444

			112C22	132C12	132C22	160C22	160C32	180C12
GKS09	m	[kg]	164					
GKS11	m	[kg]	271	294	301			
GKS14	m	[kg]	456	480	487	530	545	596

GKS□□-4M HAK

			080C32	090C12	090C32	100C12	100C32
GKS06	m	[kg]	58	63			
GKS07	m	[kg]	92	98	100	106	
GKS09	m	[kg]	150	156	158	164	167
GKS11	m	[kg]	266	272	274	280	282
GKS14	m	[kg]		466	468	474	477

			112C22	132C12	132C22	160C22	160C32	180C12
GKS09	m	[kg]	180					
GKS11	m	[kg]	295	318	325			
GKS14	m	[kg]	489	513	520	563	578	629

- Weights with oil filling for mounting position A; all values are approximate.
  The weights relate to the basic version. Bear in mind that additional weights may be needed (e.g. for motor options).

GKS□□-4M VAR / VBR

			080C32	090C12	090C32	100C12	100C32
GKS06	m	[kg]	53	59			
GKS07	m	[kg]	86	92	94	100	
GKS09	m	[kg]	142	148	150	156	159
GKS11	m	[kg]	258	264	266	272	274
GKS14	m	[kg]		466	468	474	477

			112C22	132C12	132C22	160C22	160C32	180C12
GKS09	m	[kg]	172					
GKS11	m	[kg]	287	310	317			
GKS14	m	[kg]	489	513	520	563	578	629

GKS□□-4M VAK

			080C32	090C12	090C32	100C12	100C32
GKS06	m	[kg]	60	66			
GKS07	m	[kg]	97	103	105	111	
GKS09	m	[kg]	158	164	166	172	175
GKS11	m	[kg]	282	288	290	296	298
GKS14	m	[kg]		499	501	507	510

			112C22	132C12	132C22	160C22	160C32	180C12
GKS09	m	[kg]	188					
GKS11	m	[kg]	311	334	341			
GKS14	m	[kg]	522	546	553	596	611	662

► Weights with oil filling for mounting position A; all values are approximate.
The weights relate to the basic version. Bear in mind that additional weights may be needed (e.g. for motor options).

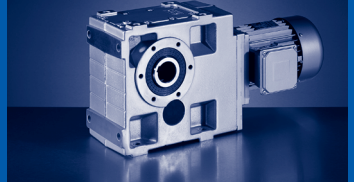

GKS□□-4M SAR / SBR

			080C32	090C12	090C32	100C12	100C32
GKS06	m	[kg]	52	57			
GKS07	m	[kg]	82	88	90	96	
GKS09	m	[kg]	137	143	145	151	154
GKS11	m	[kg]	247	253	255	261	263
GKS14	m	[kg]		444	446	452	455

			112C22	132C12	132C22	160C22	160C32	180C12
GKS09	m	[kg]	167					
GKS11	m	[kg]	276	299	306			
GKS14	m	[kg]	467	491	498	541	556	607

GKS□□-4M SAK

			080C32	090C12	090C32	100C12	100C32
GKS06	m	[kg]	59	64			
GKS07	m	[kg]	93	99	101	107	
GKS09	m	[kg]	153	159	161	167	170
GKS11	m	[kg]	271	277	279	285	287
GKS14	m	[kg]		477	479	485	488

			112C22	132C12	132C22	160C22	160C32	180C12
GKS09	m	[kg]	183					
GKS11	m	[kg]	300	323	330			
GKS14	m	[kg]	500	524	531	574	589	640

► Weights with oil filling for mounting position A; all values are approximate.
The weights relate to the basic version. Bear in mind that additional weights may be needed (e.g. for motor options).

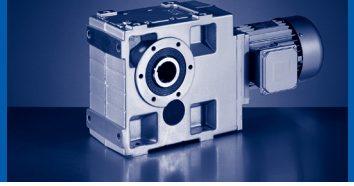

50 Hz: P_N=0.12 kW
60 Hz: P_N=0.145 kW
87 Hz: P_N=0.21 kW

n_N	1425 r/min		1725 r/min		2535 r/min		M_2 [Nm]	i		
f_N	50 Hz		60 Hz		87 Hz					
P_N	0.12 kW		0.145 kW		0.21 kW					
	n_2 [r/min]	c	n_2 [r/min]	c	n_2 [r/min]	c				
	145	5.4	175	5.1	258	4.5	8.0	9.836	GKS04-3M □□□063C12	668
	63	5.4	77	5.1	113	4.5	17	22.522	GKS04-3M □□□063C12	668
	57	5.4	69	5.1	101	4.5	19	25.088	GKS04-3M □□□063C12	668
	50	5.0	60	4.8	88	4.2	22	28.727	GKS04-3M □□□063C12	668
	45	5.0	54	4.8	79	4.2	24	32.000	GKS04-3M □□□063C12	668
	32	5.5	39	5.5	57	5.2	34	44.240	GKS04-3M □□□063C12	668
	28	4.7	34	4.7	50	4.5	39	50.943	GKS04-3M □□□063C12	668
	25	4.3	30	4.3	45	4.1	44	56.976	GKS04-3M □□□063C12	668
	22	3.7	27	3.7	39	3.5	50	64.978	GKS04-3M □□□063C12	668
	20	3.4	24	3.4	35	3.3	55	72.210	GKS04-3M □□□063C12	668
	16	2.8	19	2.8	28	2.6	69	90.491	GKS04-3M □□□063C12	668
	15	2.3	18	2.3	27	2.2	72	95.238	GKS05-4M □□□063C12	676
	14	2.4	17	2.4	25	2.3	76	100.067	GKS04-3M □□□063C12	668
	13	2.0	16	2.0	23	2.0	85	111.467	GKS04-3M □□□063C12	668
	12	3.0	15	3.0	22	3.0	86	114.987	GKS05-4M □□□063C12	676
	11	1.9	13	1.9	20	1.9	98	128.874	GKS04-3M □□□063C12	668
	11	3.0	14	3.0	20	3.0	95	126.933	GKS05-4M □□□063C12	676
	9.9	1.6	12	1.6	18	1.6	110	143.556	GKS04-3M □□□063C12	668
	9.7	2.3	12	2.3	17	2.3	110	146.667	GKS05-4M □□□063C12	676
	8.8	2.3	11	2.3	16	2.3	122	161.905	GKS05-4M □□□063C12	676
	8.7	1.5	11	1.5	16	1.5	125	163.332	GKS04-3M □□□063C12	668
	7.8	1.3	9.5	1.3	14	1.3	139	181.939	GKS04-3M □□□063C12	668
	7.7	2.4	9.3	2.4	14	2.4	139	185.547	GKS05-4M □□□063C12	676
	7	1.2	8.4	1.2	12	1.2	156	204.682	GKS04-3M □□□063C12	668
	6.8	2.0	8.3	2.0	12	2.0	157	209.067	GKS05-4M □□□063C12	676
	6.4	3.2	7.7	3.2	11	3.2	169	224.524	GKS06-4M □□□063C12	676
	6.3	1.0	7.6	1.0	11	1.0	174	228.000	GKS04-3M □□□063C12	668
	6.3	1.5	7.6	1.5	11	1.5	170	225.867	GKS05-4M □□□063C12	676
	6	1.9	7.3	1.9	11	1.9	178	236.667	GKS05-4M □□□063C12	676
	5.3	0.9	6.4	0.9	9.4	0.9	206	269.660	GKS04-3M □□□063C12	668
	5.1	2.6	6.2	2.6	9.1	2.6	210	279.286	GKS06-4M □□□063C12	676
	4.5	3.0	5.5	3.0	8	3.0	238	316.800	GKS06-4M □□□063C12	676
	3.9	1.2	4.7	1.2	7	1.2	274	364.467	GKS05-4M □□□063C12	676
	3.9	2.0	4.8	2.0	7	2.0	271	361.429	GKS06-4M □□□063C12	676
	3.5	1.0	4.2	1.0	6.2	1.0	308	410.667	GKS05-4M □□□063C12	676
	3.5	2.3	4.2	2.3	6.2	2.3	306	408.000	GKS06-4M □□□063C12	676
	3.1	1.6	3.8	1.6	5.5	1.6	344	458.067	GKS06-4M □□□063C12	676
	3	0.9	3.7	0.9	5.4	0.9	352	469.389	GKS05-4M □□□063C12	676
	2.8	1.8	3.3	1.8	4.9	1.8	388	517.091	GKS06-4M □□□063C12	676
	2.6	1.3	3.1	1.3	4.6	1.3	417	555.927	GKS06-4M □□□063C12	676
	2.2	1.5	2.7	1.5	4	1.5	481	640.800	GKS06-4M □□□063C12	676

50 Hz: P_N=0.12 kW
60 Hz: P_N=0.145 kW
87 Hz: P_N=0.21 kW

n_N	1425 r/min		1725 r/min		2535 r/min		M_2 [Nm]	i		
f_N	50 Hz		60 Hz		87 Hz					
P_N	0.12 kW		0.145 kW		0.21 kW					
	n_2 [r/min]	c	n_2 [r/min]	c	n_2 [r/min]	c				
	2.1	1.0	2.5	1.0	3.6	1.0	523	696.668	GKS06-4M □□□063C12	676
	1.8	1.2	2.1	1.2	3.1	1.2	610	812.137	GKS06-4M □□□063C12	676
	1.6	0.9	1.9	0.9	2.8	0.9	687	914.907	GKS06-4M □□□063C12	676
	1.4	0.9	1.7	0.9	2.5	0.9	764	1017.741	GKS06-4M □□□063C12	676

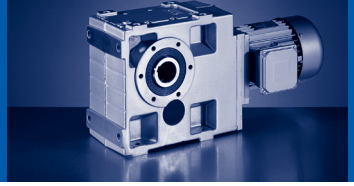

50 Hz: P_N=0.18 kW
60 Hz: P_N=0.22 kW

n_N	2740 r/min		3340 r/min				M_2 [Nm]	i		
f_N	50 Hz		60 Hz							
P_N	0.18 kW		0.22 kW							
	n_2 [r/min]	c	n_2 [r/min]	c						
	279	5.7	340	5.3			6.0	9.836	GKS04-3M □□□063C11	668
	122	5.7	148	5.3			13	22.522	GKS04-3M □□□063C11	668
	109	5.7	133	5.3			15	25.088	GKS04-3M □□□063C11	668
	95	5.3	116	4.9			17	28.727	GKS04-3M □□□063C11	668
	86	5.3	104	4.9			19	32.000	GKS04-3M □□□063C11	668
	54	5.6	66	5.2			30	50.943	GKS04-3M □□□063C11	668
	48	5.1	59	4.8			34	56.976	GKS04-3M □□□063C11	668
	42	4.4	51	4.1			39	64.978	GKS04-3M □□□063C11	668
	38	4.1	46	3.8			43	72.210	GKS04-3M □□□063C11	668
	30	3.3	37	3.1			54	90.491	GKS04-3M □□□063C11	668
	29	2.8	35	2.6			56	95.238	GKS05-4M □□□063C11	676
	27	2.9	33	2.7			60	100.067	GKS04-3M □□□063C11	668
	25	2.6	30	2.5			66	111.467	GKS04-3M □□□063C11	668
	21	2.4	26	2.4			77	128.874	GKS04-3M □□□063C11	668
	19	2.0	23	1.9			86	143.556	GKS04-3M □□□063C11	668
	19	3.0	23	2.9			86	146.667	GKS05-4M □□□063C11	676
	17	2.0	20	1.9			97	163.332	GKS04-3M □□□063C11	668
	17	3.0	21	2.9			95	161.905	GKS05-4M □□□063C11	676
	15	1.6	18	1.6			108	181.939	GKS04-3M □□□063C11	668
	15	3.1	18	2.9			109	185.547	GKS05-4M □□□063C11	676
	13	1.6	16	1.5			122	204.682	GKS04-3M □□□063C11	668
	13	2.6	16	2.5			123	209.067	GKS05-4M □□□063C11	676
	12	1.3	15	1.3			136	228.000	GKS04-3M □□□063C11	668
	12	1.9	15	1.9			132	225.867	GKS05-4M □□□063C11	676
	12	2.4	14	2.3			139	236.667	GKS05-4M □□□063C11	676
	10	1.2	12	1.1			161	269.660	GKS04-3M □□□063C11	668
	9.1	1.0	11	1.0			179	300.381	GKS04-3M □□□063C11	668
	7.6	2.5	9.2	2.5			212	361.429	GKS06-4M □□□063C11	676
	7.5	1.6	9.2	1.5			214	364.467	GKS05-4M □□□063C11	676
	6.7	1.3	8.1	1.3			241	410.667	GKS05-4M □□□063C11	676
	6.7	2.9	8.2	2.8			239	408.000	GKS06-4M □□□063C11	676
	6	2.0	7.3	1.9			268	458.067	GKS06-4M □□□063C11	676
	5.8	1.2	7.1	1.2			275	469.389	GKS05-4M □□□063C11	676
	5.4	1.0	6.6	0.9			299	510.000	GKS05-4M □□□063C11	676
	5.3	2.3	6.5	2.2			303	517.091	GKS06-4M □□□063C11	676
	5.2	1.0	6.3	1.0			310	528.889	GKS05-4M □□□063C11	676
	4.9	1.7	6	1.6			326	555.927	GKS06-4M □□□063C11	676
	4.6	1.0	5.6	0.9			349	594.894	GKS05-4M □□□063C11	676
	4.3	1.9	5.2	1.8			375	640.800	GKS06-4M □□□063C11	676
	4.1	0.8					393	670.303	GKS05-4M □□□063C11	676
	3.9	1.3	4.8	1.3			408	696.668	GKS06-4M □□□063C11	676

50 Hz: P_N=0.18 kW
60 Hz: P_N=0.22 kW

n_N	2740 r/min		3340 r/min				M_2 [Nm]	i		
f_N	50 Hz		60 Hz							
P_N	0.18 kW		0.22 kW							
	n_2 [r/min]	c	n_2 [r/min]	c						
	3.4	1.5	4.1	1.4			476	812.137	GKS06-4M □□□063C11	676
	3	1.2	3.7	1.1			536	914.907	GKS06-4M □□□063C11	676
	2.7	1.2	3.3	1.1			596	1017.741	GKS06-4M □□□063C11	676
	2.4	1.0	2.9	0.9			672	1146.529	GKS06-4M □□□063C11	676
	2	0.9	2.5	0.9			785	1340.834	GKS06-4M □□□063C11	676

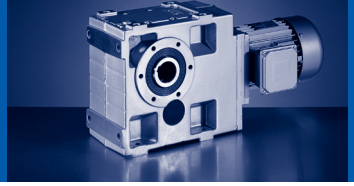

50 Hz: P_N=0.18 kW
60 Hz: P_N=0.22 kW
87 Hz: P_N=0.33 kW

n_N	1365 r/min		1665 r/min		2475 r/min		M_2 [Nm]	i		
f_N	50 Hz		60 Hz		87 Hz					
P_N	0.18 kW		0.22 kW		0.33 kW					
	n_2 [r/min]	c	n_2 [r/min]	c	n_2 [r/min]	c				
	139	3.4	169	3.3	252	2.9	12	9.836	GKS04-3M □□□063C32	668
	61	3.4	74	3.3	110	2.9	27	22.522	GKS04-3M □□□063C32	668
	54	3.4	66	3.3	99	2.9	30	25.088	GKS04-3M □□□063C32	668
	48	3.2	58	3.1	86	2.7	34	28.727	GKS04-3M □□□063C32	668
	43	3.2	52	3.1	77	2.7	38	32.000	GKS04-3M □□□063C32	668
	31	3.5	38	3.5	56	3.4	53	44.240	GKS04-3M □□□063C32	668
	27	3.0	33	3.0	49	2.9	61	50.943	GKS04-3M □□□063C32	668
	24	2.7	29	2.7	43	2.6	68	56.976	GKS04-3M □□□063C32	668
	21	2.4	26	2.4	38	2.3	78	64.978	GKS04-3M □□□063C32	668
	19	2.2	23	2.2	34	2.1	86	72.210	GKS04-3M □□□063C32	668
	15	1.8	18	1.8	27	1.7	108	90.491	GKS04-3M □□□063C32	668
	14	1.5	18	1.5	26	1.4	112	95.238	GKS05-4M □□□063C32	676
	14	1.6	17	1.6	25	1.5	120	100.067	GKS04-3M □□□063C32	668
	13	3.2	16	3.2	24	3.1	122	103.721	GKS06-4M □□□063C32	676
	12	1.3	15	1.3	22	1.3	133	111.467	GKS04-3M □□□063C32	668
	12	1.9	15	1.9	22	1.9	135	114.987	GKS05-4M □□□063C32	676
	12	3.2	15	3.2	22	3.2	133	113.205	GKS06-4M □□□063C32	676
	11	1.2	13	1.2	19	1.2	154	128.874	GKS04-3M □□□063C32	668
	11	1.9	13	1.9	20	1.9	149	126.933	GKS05-4M □□□063C32	676
	11	3.2	13	3.2	20	3.2	149	127.059	GKS06-4M □□□063C32	676
	9.7	3.2	12	3.2	18	3.2	166	140.816	GKS06-4M □□□063C32	676
	9.5	1.0	12	1.0	17	1.0	172	143.556	GKS04-3M □□□063C32	668
	9.3	1.5	11	1.5	17	1.5	172	146.667	GKS05-4M □□□063C32	676
	8.4	1.0	10	1.0	15	1.0	195	163.332	GKS04-3M □□□063C32	668
	8.4	1.5	10	1.5	15	1.5	190	161.905	GKS05-4M □□□063C32	676
	7.8	2.6	9.6	2.6	14	2.6	205	174.336	GKS06-4M □□□063C32	676
	7.4	1.5	9	1.5	13	1.5	218	185.547	GKS05-4M □□□063C32	676
	6.5	1.3	8	1.3	12	1.3	246	209.067	GKS05-4M □□□063C32	676
	6.1	2.0	7.4	2.0	11	2.0	264	224.524	GKS06-4M □□□063C32	676
	6	1.0	7.4	1.0	11	1.0	266	225.867	GKS05-4M □□□063C32	676
	5.8	1.2	7	1.2	11	1.2	278	236.667	GKS05-4M □□□063C32	676
	4.9	1.6	6	1.6	8.9	1.6	328	279.286	GKS06-4M □□□063C32	676
	4.3	1.9	5.3	1.9	7.8	1.9	373	316.800	GKS06-4M □□□063C32	676
	3.8	1.3	4.6	1.3	6.9	1.3	425	361.429	GKS06-4M □□□063C32	676
	3.4	1.5	4.1	1.5	6.1	1.5	480	408.000	GKS06-4M □□□063C32	676
	3	1.0	3.6	1.0	5.4	1.0	539	458.067	GKS06-4M □□□063C32	676
	2.6	1.2	3.2	1.2	4.8	1.2	608	517.091	GKS06-4M □□□063C32	676
	2.5	0.8	3	0.8	4.5	0.8	654	555.927	GKS06-4M □□□063C32	676
	2.1	0.9	2.6	0.9	3.9	0.9	753	640.800	GKS06-4M □□□063C32	676

50 Hz: P_N=0.18 kW
60 Hz: P_N=0.22 kW

n_N	930 r/min		1130 r/min				M_2 [Nm]	i		
f_N	50 Hz		60 Hz							
P_N	0.18 kW		0.22 kW							
	n_2 [r/min]	c	n_2 [r/min]	c						
	182	5.4	221	5.4			9.0	5.123	GKS04-3M □□□071C13	668
	132	5.4	161	5.4			12	7.025	GKS04-3M □□□071C13	668
	114	5.4	138	5.4			14	8.167	GKS04-3M □□□071C13	668
	79	5.4	96	5.4			21	11.730	GKS04-3M □□□071C13	668
	71	5.4	87	5.4			23	13.067	GKS04-3M □□□071C13	668
	58	5.4	70	5.4			28	16.087	GKS04-3M □□□071C13	668
	52	5.3	63	5.3			32	17.920	GKS04-3M □□□071C13	668
	45	5.0	55	5.0			36	20.588	GKS04-3M □□□071C13	668
	41	4.6	50	4.6			40	22.522	GKS04-3M □□□071C13	668
	37	3.8	45	3.8			44	25.088	GKS04-3M □□□071C13	668
	32	3.6	39	3.6			50	28.727	GKS04-3M □□□071C13	668
	29	3.0	35	3.0			56	32.000	GKS04-3M □□□071C13	668
	26	3.0	32	3.0			62	35.191	GKS04-3M □□□071C13	668
	24	2.4	29	2.4			69	39.200	GKS04-3M □□□071C13	668
	21	2.4	26	2.4			78	44.240	GKS04-3M □□□071C13	668
	18	2.0	22	2.0			89	50.943	GKS04-3M □□□071C13	668
	16	1.9	20	1.9			100	56.976	GKS04-3M □□□071C13	668
	14	1.6	17	1.6			114	64.978	GKS04-3M □□□071C13	668
	14	2.8	17	2.8			117	66.592	GKS05-3M □□□071C13	668
	13	1.5	16	1.5			127	72.210	GKS04-3M □□□071C13	668
	12	1.3	14	1.3			140	79.598	GKS04-3M □□□071C13	668
	12	2.4	15	2.4			132	75.033	GKS05-3M □□□071C13	668
	11	2.3	14	2.3			145	82.833	GKS05-3M □□□071C13	668
	10	1.2	13	1.2			159	90.491	GKS04-3M □□□071C13	668
	10	1.9	12	1.9			164	93.333	GKS05-3M □□□071C13	668
	9.8	1.0	12	1.0			164	95.238	GKS05-4M □□□071C13	676
	9.3	1.1	11	1.1			176	100.067	GKS04-3M □□□071C13	668
	8.7	1.8	11	1.8			188	107.196	GKS05-3M □□□071C13	668
	8.3	0.9	10	0.9			196	111.467	GKS04-3M □□□071C13	668
	8.2	2.8	10	2.8			195	113.205	GKS06-4M □□□071C13	676
	8.1	1.3	9.8	1.3			198	114.987	GKS05-4M □□□071C13	676
	7.7	1.5	9.4	1.5			212	120.784	GKS05-3M □□□071C13	668
	7.3	1.3	8.9	1.3			219	126.933	GKS05-4M □□□071C13	676
	7.3	2.8	8.9	2.8			224	127.392	GKS06-3M □□□071C13	668
	7.3	3.1	8.9	3.1			219	127.059	GKS06-4M □□□071C13	676
	7.2	0.8	8.8	0.8			226	128.874	GKS04-3M □□□071C13	668
	7.2	1.5	8.7	1.5			228	130.097	GKS05-3M □□□071C13	668
	6.6	2.2	8	2.2			243	140.816	GKS06-4M □□□071C13	676
	6.5	2.8	7.9	2.8			251	142.941	GKS06-3M □□□071C13	668
	6.3	1.0	7.7	1.0			253	146.667	GKS05-4M □□□071C13	676
	6.3	1.2	7.7	1.2			257	146.588	GKS05-3M □□□071C13	668

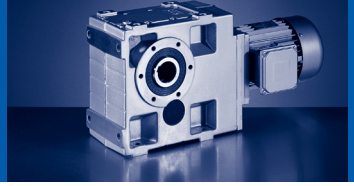

50 Hz: P_N=0.18 kW
60 Hz: P_N=0.22 kW

n_N	930 r/min		1130 r/min				M_2 [Nm]	i		
f_N	50 Hz		60 Hz							
P_N	0.18 kW		0.22 kW							
	n_2 [r/min]	c	n_2 [r/min]	c						
	6	2.6	7.3	2.6			269	155.647	GKS06-4M □□□071C13	676
	5.8	2.3	7	2.3			283	161.029	GKS06-3M □□□071C13	668
	5.7	1.0	7	1.0			279	161.905	GKS05-4M □□□071C13	676
	5.6	1.1	6.8	1.1			292	166.276	GKS05-3M □□□071C13	668
	5.3	1.8	6.5	1.8			301	174.336	GKS06-4M □□□071C13	676
	5	1.0	6	1.0			329	187.353	GKS05-3M □□□071C13	668
	5	1.0	6.1	1.0			320	185.547	GKS05-4M □□□071C13	676
	4.9	2.1	5.9	2.1			334	190.080	GKS06-3M □□□071C13	668
	4.6	2.0	5.6	2.0			350	202.588	GKS06-4M □□□071C13	676
	4.5	0.9	5.4	0.9			361	209.067	GKS05-4M □□□071C13	676
	4.4	0.9	5.4	0.9			371	211.200	GKS05-3M □□□071C13	668
	4.3	1.7	5.3	1.7			376	214.133	GKS06-3M □□□071C13	668
	4.2	2.7	5.1	2.7			385	222.909	GKS07-4M □□□071C13	676
	4.1	1.4	5	1.4			388	224.524	GKS06-4M □□□071C13	676
	4	1.7	4.9	1.7			405	230.688	GKS06-3M □□□071C13	668
	3.9	0.8	4.8	0.8			408	236.667	GKS05-4M □□□071C13	676
	3.7	1.6	4.5	1.6			435	252.000	GKS06-4M □□□071C13	676
	3.6	1.4	4.4	1.4			456	259.880	GKS06-3M □□□071C13	668
	3.4	2.2	4.1	2.2			472	273.199	GKS07-4M □□□071C13	676
	3.3	1.1	4.1	1.1			482	279.286	GKS06-4M □□□071C13	676
	3.2	1.4	3.9	1.4			512	291.600	GKS06-3M □□□071C13	668
	2.9	1.3	3.6	1.3			547	316.800	GKS06-4M □□□071C13	676
	2.9	2.4	3.5	2.4			554	321.049	GKS07-4M □□□071C13	676
	2.8	1.1	3.4	1.1			577	328.500	GKS06-3M □□□071C13	668
	2.6	0.9	3.1	0.9			624	361.429	GKS06-4M □□□071C13	676
	2.6	1.7	3.2	1.7			619	358.829	GKS07-4M □□□071C13	676
	2.3	1.0	2.8	1.0			704	408.000	GKS06-4M □□□071C13	676
	2.3	1.9	2.8	1.9			689	399.353	GKS07-4M □□□071C13	676
	2	1.3	2.4	1.3			801	464.367	GKS07-4M □□□071C13	676
	1.8	1.5	2.2	1.5			892	516.810	GKS07-4M □□□071C13	676
	1.7	1.1	2	1.1			973	563.572	GKS07-4M □□□071C13	676
	1.5	1.2	1.8	1.2			1099	636.581	GKS07-4M □□□071C13	676
	1.4	0.9	1.7	0.9			1180	683.972	GKS07-4M □□□071C13	676
	1.1	0.9	1.4	0.9			1422	823.810	GKS07-4M □□□071C13	676
	1.1	2.2	1.4	2.2			1411	817.551	GKS09-4M □□□071C13	676
	1	1.9	1.2	1.9			1590	921.367	GKS09-4M □□□071C13	676
	0.9	1.8	1.1	1.8			1712	992.209	GKS09-4M □□□071C13	676
	0.8	1.6	1	1.6			1930	1118.204	GKS09-4M □□□071C13	676
	0.7	1.3	0.8	1.3			2439	1413.461	GKS09-4M □□□071C13	676
	0.7	1.4	0.9	1.4			2164	1254.197	GKS09-4M □□□071C13	676

50 Hz: P_N=0.25 kW
60 Hz: P_N=0.31 kW

n_N	2710 r/min		3310 r/min				M_2 [Nm]	i		
f_N	50 Hz		60 Hz							
P_N	0.25 kW		0.31 kW							
	n_2 [r/min]	c	n_2 [r/min]	c						
	276	4.0	337	3.8			8.0	9.836	GKS04-3M □□□063C31	668
	120	4.0	147	3.8			19	22.522	GKS04-3M □□□063C31	668
	108	4.0	132	3.8			21	25.088	GKS04-3M □□□063C31	668
	94	3.8	115	3.5			24	28.727	GKS04-3M □□□063C31	668
	85	3.8	103	3.5			27	32.000	GKS04-3M □□□063C31	668
	61	4.7	75	4.4			37	44.240	GKS04-3M □□□063C31	668
	53	4.0	65	3.7			43	50.943	GKS04-3M □□□063C31	668
	48	3.7	58	3.4			48	56.976	GKS04-3M □□□063C31	668
	42	3.1	51	2.9			54	64.978	GKS04-3M □□□063C31	668
	38	2.9	46	2.7			60	72.210	GKS04-3M □□□063C31	668
	30	2.3	37	2.2			76	90.491	GKS04-3M □□□063C31	668
	29	2.0	35	1.9			78	95.238	GKS05-4M □□□063C31	676
	27	2.1	33	1.9			84	100.067	GKS04-3M □□□063C31	668
	24	1.8	30	1.8			93	111.467	GKS04-3M □□□063C31	668
	24	2.7	29	2.6			95	114.987	GKS05-4M □□□063C31	676
	21	1.7	26	1.7			108	128.874	GKS04-3M □□□063C31	668
	21	2.7	26	2.6			104	126.933	GKS05-4M □□□063C31	676
	19	1.4	23	1.4			120	143.556	GKS04-3M □□□063C31	668
	19	2.1	23	2.1			121	146.667	GKS05-4M □□□063C31	676
	17	1.4	20	1.4			137	163.332	GKS04-3M □□□063C31	668
	17	2.1	20	2.1			133	161.905	GKS05-4M □□□063C31	676
	15	1.1	18	1.1			152	181.939	GKS04-3M □□□063C31	668
	15	2.2	18	2.1			153	185.547	GKS05-4M □□□063C31	676
	13	1.1	16	1.1			171	204.682	GKS04-3M □□□063C31	668
	13	1.8	16	1.8			172	209.067	GKS05-4M □□□063C31	676
	12	0.9	15	0.9			191	228.000	GKS04-3M □□□063C31	668
	12	1.4	15	1.3			186	225.867	GKS05-4M □□□063C31	676
	12	1.7	14	1.7			195	236.667	GKS05-4M □□□063C31	676
	12	2.9	15	2.8			185	224.524	GKS06-4M □□□063C31	676
	10	0.8	12	0.8			226	269.660	GKS04-3M □□□063C31	668
	9.7	2.3	12	2.3			230	279.286	GKS06-4M □□□063C31	676
	8.6	2.7	10	2.6			261	316.800	GKS06-4M □□□063C31	676
	7.5	1.8	9.2	1.8			297	361.429	GKS06-4M □□□063C31	676
	7.4	1.1	9.1	1.1			300	364.467	GKS05-4M □□□063C31	676
	6.6	0.9	8.1	0.9			338	410.667	GKS05-4M □□□063C31	676
	6.6	2.1	8.1	2.0			336	408.000	GKS06-4M □□□063C31	676
	5.9	1.4	7.2	1.4			377	458.067	GKS06-4M □□□063C31	676
	5.8	0.9	7.1	0.8			386	469.389	GKS05-4M □□□063C31	676
	5.2	1.7	6.4	1.6			425	517.091	GKS06-4M □□□063C31	676
	4.9	1.2	6	1.1			457	555.927	GKS06-4M □□□063C31	676
	4.2	1.3	5.2	1.3			527	640.800	GKS06-4M □□□063C31	676

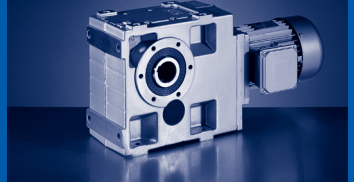

50 Hz: P_N=0.25 kW
60 Hz: P_N=0.31 kW

n_N	2710 r/min		3310 r/min				M_2 [Nm]	i		
f_N	50 Hz		60 Hz							
P_N	0.25 kW		0.31 kW							
	n_2 [r/min]	c	n_2 [r/min]	c						
	3.9	0.9	4.8	0.9			573	696.668	GKS06-4M □□□063C31	676
	3.3	1.1	4.1	1.0			668	812.137	GKS06-4M □□□063C31	676
	3	0.8	3.6	0.8			753	914.907	GKS06-4M □□□063C31	676
	2.7	0.8	3.3	0.8			837	1017.741	GKS06-4M □□□063C31	676

50 Hz: P_N=0.25 kW
60 Hz: P_N=0.31 kW
87 Hz: P_N=0.45 kW

n_N	1370 r/min		1670 r/min		2480 r/min		M_2 [Nm]	i		
f_N	50 Hz		60 Hz		87 Hz					
P_N	0.25 kW		0.31 kW		0.45 kW					
	n_2 [r/min]	c	n_2 [r/min]	c	n_2 [r/min]	c				
	267	4.6	326	4.4	484	3.9	9.0	5.123	GKS04-3M □□□063C42	668
	195	4.6	238	4.4	353	3.9	12	7.025	GKS04-3M □□□063C42	668
	168	4.6	205	4.4	304	3.9	14	8.167	GKS04-3M □□□063C42	668
	152	5.2	186	5.0	276	4.4	15	8.991	GKS04-3M □□□063C42	668
	139	5.2	170	5.0	252	4.4	16	9.836	GKS04-3M □□□063C42	668
	117	4.6	142	4.4	211	3.9	19	11.730	GKS04-3M □□□063C42	668
	105	4.6	128	4.4	190	3.9	22	13.067	GKS04-3M □□□063C42	668
	96	5.2	117	5.0	173	4.4	24	14.333	GKS04-3M □□□063C42	668
	85	4.6	104	4.4	154	3.9	27	16.087	GKS04-3M □□□063C42	668
	77	4.6	93	4.4	138	3.9	30	17.920	GKS04-3M □□□063C42	668
	67	5.2	81	5.0	121	4.4	34	20.588	GKS04-3M □□□063C42	668
	61	4.9	74	4.7	110	4.1	37	22.522	GKS04-3M □□□063C42	668
	55	4.0	67	3.9	99	3.4	42	25.088	GKS04-3M □□□063C42	668
	48	3.9	58	3.7	86	3.3	48	28.727	GKS04-3M □□□063C42	668
	43	3.2	52	3.0	78	2.7	53	32.000	GKS04-3M □□□063C42	668
	39	3.1	48	3.0	71	2.7	58	35.191	GKS04-3M □□□063C42	668
	35	2.6	43	2.5	63	2.2	65	39.200	GKS04-3M □□□063C42	668
	31	2.5	38	2.5	56	2.4	73	44.240	GKS04-3M □□□063C42	668
	27	2.2	33	2.2	49	2.1	84	50.943	GKS04-3M □□□063C42	668
	24	2.0	29	2.0	44	1.9	94	56.976	GKS04-3M □□□063C42	668
	21	1.7	26	1.7	38	1.6	108	64.978	GKS04-3M □□□063C42	668
	21	3.0	25	3.0	37	2.9	110	66.592	GKS05-3M □□□063C42	668
	19	1.6	23	1.6	34	1.5	120	72.210	GKS04-3M □□□063C42	668
	18	2.5	22	2.5	33	2.4	124	75.033	GKS05-3M □□□063C42	668
	17	1.4	21	1.4	31	1.3	132	79.598	GKS04-3M □□□063C42	668
	17	2.4	20	2.4	30	2.3	137	82.833	GKS05-3M □□□063C42	668
	15	1.2	19	1.2	27	1.2	150	90.491	GKS04-3M □□□063C42	668
	15	2.0	18	2.0	27	2.0	155	93.333	GKS05-3M □□□063C42	668
	14	1.1	17	1.1	25	1.1	166	100.067	GKS04-3M □□□063C42	668
	14	1.1	18	1.1	26	1.0	155	95.238	GKS05-4M □□□063C42	676
	13	1.9	16	1.9	23	1.8	177	107.196	GKS05-3M □□□063C42	668
	12	0.9	15	0.9	22	0.9	185	111.467	GKS04-3M □□□063C42	668
	12	1.4	15	1.4	22	1.4	187	114.987	GKS05-4M □□□063C42	676
	12	2.9	15	2.9	22	2.9	184	113.205	GKS06-4M □□□063C42	676
	12	3.2	15	3.2	22	3.2	187	113.082	GKS06-3M □□□063C42	668
	11	0.9	13	0.9	19	0.9	213	128.874	GKS04-3M □□□063C42	668
	11	1.4	13	1.4	20	1.4	207	126.933	GKS05-4M □□□063C42	676
	11	1.5	13	1.5	19	1.5	215	130.097	GKS05-3M □□□063C42	668
	11	1.6	14	1.6	21	1.6	200	120.784	GKS05-3M □□□063C42	668
	11	3.0	13	3.0	20	3.0	211	127.392	GKS06-3M □□□063C42	668
	9.7	2.3	12	2.3	18	2.3	229	140.816	GKS06-4M □□□063C42	676

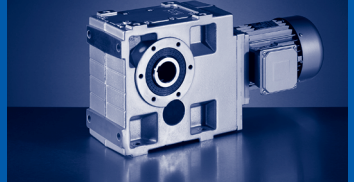

50 Hz: P_N=0.25 kW
60 Hz: P_N=0.31 kW
87 Hz: P_N=0.45 kW

n_N	1370 r/min		1670 r/min		2480 r/min		M_2 [Nm]	i		
f_N	50 Hz		60 Hz		87 Hz					
P_N	0.25 kW		0.31 kW		0.45 kW					
	n_2 [r/min]	c	n_2 [r/min]	c	n_2 [r/min]	c				
	9.6	2.6	12	2.6	17	2.6	237	142.941	GKS06-3M □□□063C42	668
	9.4	1.3	11	1.3	17	1.3	243	146.588	GKS05-3M □□□063C42	668
	9.3	1.1	11	1.1	17	1.1	239	146.667	GKS05-4M □□□063C42	676
	8.8	2.7	11	2.7	16	2.7	253	155.647	GKS06-4M □□□063C42	676
	8.5	1.1	10	1.1	15	1.1	263	161.905	GKS05-4M □□□063C42	676
	8.5	2.4	10	2.4	15	2.4	267	161.029	GKS06-3M □□□063C42	668
	8.2	1.2	10	1.2	15	1.2	275	166.276	GKS05-3M □□□063C42	668
	7.9	1.9	9.6	1.9	14	1.9	284	174.336	GKS06-4M □□□063C42	676
	7.4	1.1	9	1.1	13	1.1	302	185.547	GKS05-4M □□□063C42	676
	7.3	1.0	8.9	1.0	13	1.0	310	187.353	GKS05-3M □□□063C42	668
	7.2	2.2	8.8	2.2	13	2.2	315	190.080	GKS06-3M □□□063C42	668
	6.8	2.1	8.2	2.1	12	2.1	330	202.588	GKS06-4M □□□063C42	676
	6.6	0.9	8	0.9	12	0.9	340	209.067	GKS05-4M □□□063C42	676
	6.5	0.9	7.9	0.9	12	0.9	350	211.200	GKS05-3M □□□063C42	668
	6.4	1.8	7.8	1.8	12	1.8	354	214.133	GKS06-3M □□□063C42	668
	6.2	2.9	7.5	2.9	11	2.9	363	222.909	GKS07-4M □□□063C42	676
	6.1	1.5	7.4	1.5	11	1.5	365	224.524	GKS06-4M □□□063C42	676
	5.9	1.8	7.2	1.8	11	1.8	382	230.688	GKS06-3M □□□063C42	668
	5.8	0.9	7.1	0.9	11	0.9	385	236.667	GKS05-4M □□□063C42	676
	5.4	1.7	6.6	1.7	9.8	1.7	410	252.000	GKS06-4M □□□063C42	676
	5.3	1.5	6.4	1.5	9.5	1.5	430	259.880	GKS06-3M □□□063C42	668
	5	2.4	6.1	2.4	9.1	2.4	445	273.199	GKS07-4M □□□063C42	676
	4.9	1.2	6	1.2	8.9	1.2	454	279.286	GKS06-4M □□□063C42	676
	4.7	1.5	5.7	1.5	8.5	1.5	483	291.600	GKS06-3M □□□063C42	668
	4.3	1.4	5.3	1.4	7.8	1.4	516	316.800	GKS06-4M □□□063C42	676
	4.3	2.5	5.2	2.5	7.7	2.5	522	321.049	GKS07-4M □□□063C42	676
	4.2	1.2	5.1	1.2	7.6	1.2	544	328.500	GKS06-3M □□□063C42	668
	3.8	0.9	4.6	0.9	6.9	0.9	588	361.429	GKS06-4M □□□063C42	676
	3.8	1.8	4.7	1.8	6.9	1.8	584	358.829	GKS07-4M □□□063C42	676
	3.4	1.1	4.1	1.1	6.1	1.1	664	408.000	GKS06-4M □□□063C42	676
	3.4	2.0	4.2	2.0	6.2	2.0	650	399.353	GKS07-4M □□□063C42	676
	3	1.4	3.6	1.4	5.3	1.4	756	464.367	GKS07-4M □□□063C42	676
	2.7	0.8	3.2	0.8	4.8	0.8	841	517.091	GKS06-4M □□□063C42	676
	2.7	1.6	3.2	1.6	4.8	1.6	841	516.810	GKS07-4M □□□063C42	676
	2.4	1.2	3	1.2	4.4	1.2	917	563.572	GKS07-4M □□□063C42	676
	2.2	1.3	2.6	1.3	3.9	1.3	1036	636.581	GKS07-4M □□□063C42	676
	2	1.0	2.4	1.0	3.6	1.0	1113	683.972	GKS07-4M □□□063C42	676
	1.7	1.0	2	1.0	3	1.0	1340	823.810	GKS07-4M □□□063C42	676
	1.7	2.3	2	2.3	3	2.3	1330	817.551	GKS09-4M □□□063C42	676
	1.5	0.8	1.8	0.8	2.7	0.8	1510	928.237	GKS07-4M □□□063C42	676
	1.5	2.1	1.8	2.1	2.7	2.1	1499	921.367	GKS09-4M □□□063C42	676

50 Hz: P_N=0.25 kW
60 Hz: P_N=0.31 kW
87 Hz: P_N=0.45 kW

n_N	1370 r/min		1670 r/min		2480 r/min		M_2 [Nm]	i		
f_N	50 Hz		60 Hz		87 Hz					
P_N	0.25 kW		0.31 kW		0.45 kW					
	n_2 [r/min]	c	n_2 [r/min]	c	n_2 [r/min]	c				
	1.4	0.8	1.7	0.8	2.5	0.8	1627	999.806	GKS07-4M □□□063C42	676
	1.4	1.9	1.7	1.9	2.5	1.9	1614	992.209	GKS09-4M □□□063C42	676
	1.2	1.7	1.5	1.7	2.2	1.7	1819	1118.204	GKS09-4M □□□063C42	676
	1.1	1.5	1.3	1.5	2	1.5	2041	1254.197	GKS09-4M □□□063C42	676
	1	1.3	1.2	1.3	1.8	1.3	2300	1413.461	GKS09-4M □□□063C42	676

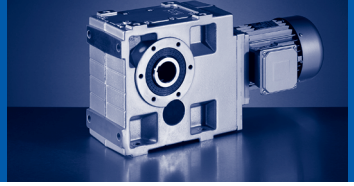

50 Hz: P_N=0.25 kW
60 Hz: P_N=0.3 kW

n_N	930 r/min		1130 r/min				M_2 [Nm]	i		
f_N	50 Hz		60 Hz							
P_N	0.25 kW		0.3 kW							
	n_2 [r/min]	c	n_2 [r/min]	c						
	182	3.9	221	3.9			13	5.123	GKS04-3M □□□071C33	668
	132	3.9	161	3.9			17	7.025	GKS04-3M □□□071C33	668
	114	3.9	138	3.9			20	8.167	GKS04-3M □□□071C33	668
	103	4.4	126	4.4			22	8.991	GKS04-3M □□□071C33	668
	95	4.4	115	4.4			24	9.836	GKS04-3M □□□071C33	668
	79	3.9	96	3.9			29	11.730	GKS04-3M □□□071C33	668
	71	3.9	87	3.9			32	13.067	GKS04-3M □□□071C33	668
	65	4.4	79	4.4			35	14.333	GKS04-3M □□□071C33	668
	58	3.9	70	3.9			39	16.087	GKS04-3M □□□071C33	668
	52	3.8	63	3.8			44	17.920	GKS04-3M □□□071C33	668
	45	3.6	55	3.6			50	20.588	GKS04-3M □□□071C33	668
	41	3.3	50	3.3			55	22.522	GKS04-3M □□□071C33	668
	37	2.7	45	2.7			61	25.088	GKS04-3M □□□071C33	668
	32	2.6	39	2.6			70	28.727	GKS04-3M □□□071C33	668
	29	2.1	35	2.1			78	32.000	GKS04-3M □□□071C33	668
	26	2.1	32	2.1			86	35.191	GKS04-3M □□□071C33	668
	24	1.8	29	1.8			96	39.200	GKS04-3M □□□071C33	668
	22	3.3	27	3.3			102	41.765	GKS05-3M □□□071C33	668
	21	1.7	26	1.7			108	44.240	GKS04-3M □□□071C33	668
	20	2.7	24	2.7			115	47.059	GKS05-3M □□□071C33	668
	18	1.5	22	1.5			124	50.943	GKS04-3M □□□071C33	668
	16	1.4	20	1.4			139	56.976	GKS04-3M □□□071C33	668
	14	1.2	17	1.2			158	64.978	GKS04-3M □□□071C33	668
	14	2.0	17	2.0			162	66.592	GKS05-3M □□□071C33	668
	13	1.1	16	1.1			176	72.210	GKS04-3M □□□071C33	668
	12	0.9	14	0.9			194	79.598	GKS04-3M □□□071C33	668
	12	1.7	15	1.7			183	75.033	GKS05-3M □□□071C33	668
	11	1.6	14	1.6			202	82.833	GKS05-3M □□□071C33	668
	10	0.9	13	0.9			221	90.491	GKS04-3M □□□071C33	668
	10	1.4	12	1.4			228	93.333	GKS05-3M □□□071C33	668
	10	3.1	12	3.1			227	93.176	GKS06-3M □□□071C33	668
	9	2.8	11	2.8			249	103.721	GKS06-4M □□□071C33	676
	8.9	2.5	11	2.5			256	104.967	GKS06-3M □□□071C33	668
	8.7	1.3	11	1.3			261	107.196	GKS05-3M □□□071C33	668
	8.2	2.0	10	2.0			271	113.205	GKS06-4M □□□071C33	676
	8.2	2.6	10	2.6			276	113.082	GKS06-3M □□□071C33	668
	8.1	0.9	9.8	0.9			276	114.987	GKS05-4M □□□071C33	676
	7.7	1.1	9.4	1.1			295	120.784	GKS05-3M □□□071C33	668
	7.3	0.9	8.9	0.9			304	126.933	GKS05-4M □□□071C33	676
	7.3	2.0	8.9	2.0			311	127.392	GKS06-3M □□□071C33	668
	7.3	2.3	8.9	2.3			305	127.059	GKS06-4M □□□071C33	676

50 Hz: P_N=0.25 kW
60 Hz: P_N=0.3 kW

n_N	930 r/min		1130 r/min				M_2 [Nm]	i		
f_N	50 Hz		60 Hz							
P_N	0.25 kW		0.3 kW							
	n_2 [r/min]	c	n_2 [r/min]	c						
	7.2	1.0	8.7	1.0			317	130.097	GKS05-3M □□□071C33	668
	6.8	3.2	8.2	3.2			330	137.748	GKS07-4M □□□071C33	676
	6.6	1.6	8	1.6			338	140.816	GKS06-4M □□□071C33	676
	6.5	2.0	7.9	2.0			349	142.941	GKS06-3M □□□071C33	668
	6.3	0.9	7.7	0.9			357	146.588	GKS05-3M □□□071C33	668
	6	1.9	7.3	1.9			373	155.647	GKS06-4M □□□071C33	676
	5.8	1.6	7	1.6			393	161.029	GKS06-3M □□□071C33	668
	5.6	0.8	6.8	0.8			405	166.276	GKS05-3M □□□071C33	668
	5.3	1.3	6.5	1.3			418	174.336	GKS06-4M □□□071C33	676
	5.2	2.5	6.3	2.5			430	179.201	GKS07-4M □□□071C33	676
	4.9	1.5	5.9	1.5			464	190.080	GKS06-3M □□□071C33	668
	4.6	1.4	5.6	1.4			486	202.588	GKS06-4M □□□071C33	676
	4.3	1.2	5.3	1.2			522	214.133	GKS06-3M □□□071C33	668
	4.2	2.0	5.1	2.0			534	222.909	GKS07-4M □□□071C33	676
	4.1	1.0	5	1.0			538	224.524	GKS06-4M □□□071C33	676
	4	1.3	4.9	1.3			563	230.688	GKS06-3M □□□071C33	668
	3.7	1.2	4.5	1.2			604	252.000	GKS06-4M □□□071C33	676
	3.6	1.0	4.4	1.0			634	259.880	GKS06-3M □□□071C33	668
	3.4	1.6	4.1	1.6			655	273.199	GKS07-4M □□□071C33	676
	3.3	0.8	4.1	0.8			669	279.286	GKS06-4M □□□071C33	676
	3.2	1.0	3.9	1.0			711	291.600	GKS06-3M □□□071C33	668
	2.9	0.9	3.6	0.9			759	316.800	GKS06-4M □□□071C33	676
	2.9	1.7	3.5	1.7			770	321.049	GKS07-4M □□□071C33	676
	2.6	1.2	3.2	1.2			860	358.829	GKS07-4M □□□071C33	676
	2.3	1.4	2.8	1.4			957	399.353	GKS07-4M □□□071C33	676
	2	1.0	2.4	1.0			1113	464.367	GKS07-4M □□□071C33	676
	1.8	1.1	2.2	1.1			1239	516.810	GKS07-4M □□□071C33	676
	1.5	0.9	1.8	0.9			1526	636.581	GKS07-4M □□□071C33	676
	1.1	1.6	1.4	1.6			1960	817.551	GKS09-4M □□□071C33	676
	1	1.4	1.2	1.4			2208	921.367	GKS09-4M □□□071C33	676
	0.9	1.3	1.1	1.3			2378	992.209	GKS09-4M □□□071C33	676
	0.8	1.2	1	1.2			2680	1118.204	GKS09-4M □□□071C33	676
	0.7	0.9	0.8	0.9			3388	1413.461	GKS09-4M □□□071C33	676
	0.7	1.0	0.9	1.0			3006	1254.197	GKS09-4M □□□071C33	676

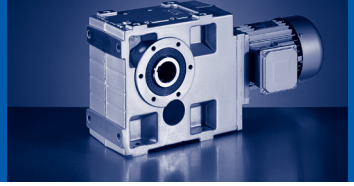

50 Hz: P_N=0.37 kW
60 Hz: P_N=0.45 kW

n_N	2720 r/min		3320 r/min				M_2 [Nm]	i		
f_N	50 Hz		60 Hz							
P_N	0.37 kW		0.45 kW							
	n_2 [r/min]	c	n_2 [r/min]	c						
	132	5.9	161	5.5			25	20.588	GKS04-3M □□□071C11	668
	121	5.4	147	5.0			28	22.522	GKS04-3M □□□071C11	668
	108	4.4	132	4.1			31	25.088	GKS04-3M □□□071C11	668
	95	4.2	116	4.0			35	28.727	GKS04-3M □□□071C11	668
	85	3.5	104	3.3			40	32.000	GKS04-3M □□□071C11	668
	77	3.5	94	3.2			43	35.191	GKS04-3M □□□071C11	668
	69	2.9	85	2.7			48	39.200	GKS04-3M □□□071C11	668
	62	3.2	75	3.0			55	44.240	GKS04-3M □□□071C11	668
	53	2.7	65	2.5			63	50.943	GKS04-3M □□□071C11	668
	48	2.5	58	2.3			70	56.976	GKS04-3M □□□071C11	668
	42	2.1	51	2.0			80	64.978	GKS04-3M □□□071C11	668
	38	2.0	46	1.9			89	72.210	GKS04-3M □□□071C11	668
	36	3.1	44	2.9			93	75.033	GKS05-3M □□□071C11	668
	34	1.7	42	1.6			98	79.598	GKS04-3M □□□071C11	668
	33	3.0	40	2.8			102	82.833	GKS05-3M □□□071C11	668
	30	1.6	37	1.5			112	90.491	GKS04-3M □□□071C11	668
	29	1.3	35	1.3			116	95.238	GKS05-4M □□□071C11	676
	29	2.6	36	2.4			115	93.333	GKS05-3M □□□071C11	668
	27	1.4	33	1.3			124	100.067	GKS04-3M □□□071C11	668
	25	2.3	31	2.2			132	107.196	GKS05-3M □□□071C11	668
	24	1.2	30	1.2			138	111.467	GKS04-3M □□□071C11	668
	24	1.8	29	1.8			140	114.987	GKS05-4M □□□071C11	676
	23	2.1	28	2.0			149	120.784	GKS05-3M □□□071C11	668
	21	1.2	26	1.1			159	128.874	GKS04-3M □□□071C11	668
	21	1.8	26	1.8			154	126.933	GKS05-4M □□□071C11	676
	21	2.1	26	2.0			161	130.097	GKS05-3M □□□071C11	668
	19	1.0	23	0.9			177	143.556	GKS04-3M □□□071C11	668
	19	1.4	23	1.4			178	146.667	GKS05-4M □□□071C11	676
	19	1.7	23	1.7			181	146.588	GKS05-3M □□□071C11	668
	19	3.1	24	3.0			171	140.816	GKS06-4M □□□071C11	676
	17	0.9	20	0.9			202	163.332	GKS04-3M □□□071C11	668
	17	1.4	21	1.4			196	161.905	GKS05-4M □□□071C11	676
	17	3.2	21	3.1			199	161.029	GKS06-3M □□□071C11	668
	16	1.6	20	1.6			205	166.276	GKS05-3M □□□071C11	668
	16	2.5	19	2.5			211	174.336	GKS06-4M □□□071C11	676
	15	1.4	18	1.3			231	187.353	GKS05-3M □□□071C11	668
	15	1.5	18	1.4			225	185.547	GKS05-4M □□□071C11	676
	14	3.0	18	2.9			235	190.080	GKS06-3M □□□071C11	668
	13	1.2	16	1.2			261	211.200	GKS05-3M □□□071C11	668
	13	1.2	16	1.2			254	209.067	GKS05-4M □□□071C11	676
	13	2.4	16	2.3			264	214.133	GKS06-3M □□□071C11	668

50 Hz: P_N=0.37 kW
60 Hz: P_N=0.45 kW

n_N	2720 r/min		3320 r/min				M_2 [Nm]	i		
f_N	50 Hz		60 Hz							
P_N	0.37 kW		0.45 kW							
	n_2 [r/min]	c	n_2 [r/min]	c						
	13	2.8	16	2.7			246	202.588	GKS06-4M □□□071C11	676
	12	0.9	15	0.9			274	225.867	GKS05-4M □□□071C11	676
	12	1.0	15	1.0			281	227.484	GKS05-3M □□□071C11	668
	12	1.2	14	1.1			287	236.667	GKS05-4M □□□071C11	676
	12	2.0	15	1.9			272	224.524	GKS06-4M □□□071C11	676
	12	2.5	14	2.4			285	230.688	GKS06-3M □□□071C11	668
	11	1.0	13	1.0			316	256.320	GKS05-3M □□□071C11	668
	11	2.0	13	1.9			321	259.880	GKS06-3M □□□071C11	668
	11	2.3	13	2.2			306	252.000	GKS06-4M □□□071C11	676
	10	3.2	12	3.1			331	273.199	GKS07-4M □□□071C11	676
	9.7	1.6	12	1.5			339	279.286	GKS06-4M □□□071C11	676
	9.4	0.9	12	0.9			352	289.917	GKS05-4M □□□071C11	676
	9.3	2.0	11	1.9			360	291.600	GKS06-3M □□□071C11	668
	8.6	1.8	11	1.8			384	316.800	GKS06-4M □□□071C11	676
	8.3	1.6	10	1.5			405	328.500	GKS06-3M □□□071C11	668
	7.6	2.4	9.3	2.3			435	358.829	GKS07-4M □□□071C11	676
	7.5	1.2	9.2	1.2			438	361.429	GKS06-4M □□□071C11	676
	6.8	2.7	8.3	2.6			484	399.353	GKS07-4M □□□071C11	676
	6.7	1.4	8.1	1.4			495	408.000	GKS06-4M □□□071C11	676
	5.9	1.0	7.3	0.9			556	458.067	GKS06-4M □□□071C11	676
	5.9	1.9	7.2	1.8			563	464.367	GKS07-4M □□□071C11	676
	5.3	1.1	6.4	1.1			627	517.091	GKS06-4M □□□071C11	676
	5.3	2.1	6.4	2.0			627	516.810	GKS07-4M □□□071C11	676
	4.8	1.5	5.9	1.5			684	563.572	GKS07-4M □□□071C11	676
	4.3	1.7	5.2	1.7			772	636.581	GKS07-4M □□□071C11	676
	4.2	0.9	5.2	0.9			777	640.800	GKS06-4M □□□071C11	676
	4	1.3	4.9	1.2			830	683.972	GKS07-4M □□□071C11	676
	3.3	1.3	4	1.3			999	823.810	GKS07-4M □□□071C11	676
	3.3	3.1	4.1	3.0			992	817.551	GKS09-4M □□□071C11	676
	3	2.8	3.6	2.7			1118	921.367	GKS09-4M □□□071C11	676
	2.9	1.1	3.6	1.0			1126	928.237	GKS07-4M □□□071C11	676
	2.7	1.1	3.3	1.1			1213	999.806	GKS07-4M □□□071C11	676
	2.7	2.5	3.4	2.4			1203	992.209	GKS09-4M □□□071C11	676
	2.4	0.9	3	0.9			1366	1126.542	GKS07-4M □□□071C11	676
	2.4	2.3	3	2.2			1356	1118.204	GKS09-4M □□□071C11	676
	2.2	2.0	2.7	1.9			1521	1254.197	GKS09-4M □□□071C11	676
	2.1	0.9	2.6	0.8			1550	1277.842	GKS07-4M □□□071C11	676
	1.9	1.8	2.4	1.7			1714	1413.461	GKS09-4M □□□071C11	676

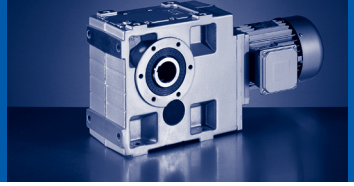

50 Hz: P_N=0.37 kW
60 Hz: P_N=0.45 kW
87 Hz: P_N=0.66 kW

n_N	1410 r/min		1710 r/min		2520 r/min		M_2 [Nm]	i		
f_N	50 Hz		60 Hz		87 Hz					
P_N	0.37 kW		0.45 kW		0.66 kW					
	n_2 [r/min]	c	n_2 [r/min]	c	n_2 [r/min]	c				
	275	4.0	334	3.8	492	3.3	12	5.123	GKS04-3M □□□071C32	668
	201	4.0	243	3.8	359	3.3	17	7.025	GKS04-3M □□□071C32	668
	173	4.0	209	3.8	309	3.3	19	8.167	GKS04-3M □□□071C32	668
	157	4.5	190	4.4	280	3.8	21	8.991	GKS04-3M □□□071C32	668
	143	4.5	174	4.3	256	3.8	23	9.836	GKS04-3M □□□071C32	668
	120	4.0	146	3.8	215	3.3	28	11.730	GKS04-3M □□□071C32	668
	108	4.0	131	3.8	193	3.3	31	13.067	GKS04-3M □□□071C32	668
	98	4.5	119	4.4	176	3.8	34	14.333	GKS04-3M □□□071C32	668
	88	4.0	106	3.8	157	3.3	38	16.087	GKS04-3M □□□071C32	668
	79	3.9	95	3.7	141	3.3	43	17.920	GKS04-3M □□□071C32	668
	69	3.7	83	3.6	122	3.1	49	20.588	GKS04-3M □□□071C32	668
	63	3.4	76	3.3	112	2.9	54	22.522	GKS04-3M □□□071C32	668
	56	2.8	68	2.7	100	2.4	60	25.088	GKS04-3M □□□071C32	668
	49	2.7	60	2.6	88	2.3	68	28.727	GKS04-3M □□□071C32	668
	44	2.2	53	2.1	79	1.8	76	32.000	GKS04-3M □□□071C32	668
	40	2.2	49	2.1	72	1.8	84	35.191	GKS04-3M □□□071C32	668
	36	1.8	44	1.7	64	1.5	93	39.200	GKS04-3M □□□071C32	668
	32	1.8	39	1.8	57	1.7	105	44.240	GKS04-3M □□□071C32	668
	30	2.7	36	2.7	54	2.6	112	47.059	GKS05-3M □□□071C32	668
	28	1.5	34	1.5	50	1.4	121	50.943	GKS04-3M □□□071C32	668
	25	1.4	30	1.4	44	1.3	136	56.976	GKS04-3M □□□071C32	668
	22	1.2	26	1.2	39	1.1	155	64.978	GKS04-3M □□□071C32	668
	21	2.1	26	2.1	38	2.0	159	66.592	GKS05-3M □□□071C32	668
	20	1.1	24	1.1	35	1.1	172	72.210	GKS04-3M □□□071C32	668
	19	1.7	23	1.7	34	1.7	179	75.033	GKS05-3M □□□071C32	668
	18	1.0	22	1.0	32	0.9	190	79.598	GKS04-3M □□□071C32	668
	17	1.7	21	1.7	30	1.6	197	82.833	GKS05-3M □□□071C32	668
	16	0.9	19	0.9	28	0.8	215	90.491	GKS04-3M □□□071C32	668
	15	1.4	18	1.4	27	1.4	222	93.333	GKS05-3M □□□071C32	668
	15	3.2	18	3.2	27	3.0	222	93.176	GKS06-3M □□□071C32	668
	14	2.8	17	2.8	24	2.7	243	103.721	GKS06-4M □□□071C32	676
	13	1.3	16	1.3	24	1.2	255	107.196	GKS05-3M □□□071C32	668
	13	2.0	15	2.0	22	2.0	265	113.205	GKS06-4M □□□071C32	676
	13	2.5	16	2.5	24	2.4	250	104.967	GKS06-3M □□□071C32	668
	13	2.6	15	2.6	22	2.6	269	113.082	GKS06-3M □□□071C32	668
	12	1.0	15	1.0	22	1.0	269	114.987	GKS05-4M □□□071C32	676
	12	1.1	14	1.1	21	1.1	288	120.784	GKS05-3M □□□071C32	668
	11	1.0	14	1.0	20	1.0	297	126.933	GKS05-4M □□□071C32	676
	11	1.1	13	1.1	19	1.1	310	130.097	GKS05-3M □□□071C32	668
	11	2.1	13	2.1	20	2.1	303	127.392	GKS06-3M □□□071C32	668
	11	2.3	14	2.3	20	2.3	297	127.059	GKS06-4M □□□071C32	676

50 Hz: P_N=0.37 kW
60 Hz: P_N=0.45 kW
87 Hz: P_N=0.66 kW

n_N	1410 r/min		1710 r/min		2520 r/min		M_2 [Nm]	i		
f_N	50 Hz		60 Hz		87 Hz					
P_N	0.37 kW		0.45 kW		0.66 kW					
	n_2 [r/min]	c	n_2 [r/min]	c	n_2 [r/min]	c				
	10	1.6	12	1.6	18	1.6	330	140.816	GKS06-4M □□□071C32	676
	9.9	2.1	12	2.1	18	2.1	340	142.941	GKS06-3M □□□071C32	668
	9.6	0.9	12	0.9	17	0.9	349	146.588	GKS05-3M □□□071C32	668
	9.1	1.9	11	1.9	16	1.9	364	155.647	GKS06-4M □□□071C32	676
	8.8	1.7	11	1.7	16	1.7	383	161.029	GKS06-3M □□□071C32	668
	8.5	0.8	10	0.8	15	0.8	396	166.276	GKS05-3M □□□071C32	668
	8.1	1.3	9.8	1.3	15	1.3	408	174.336	GKS06-4M □□□071C32	676
	7.9	2.5	9.5	2.5	14	2.5	419	179.201	GKS07-4M □□□071C32	676
	7.4	1.6	9	1.6	13	1.6	452	190.080	GKS06-3M □□□071C32	668
	7	1.5	8.4	1.5	12	1.5	474	202.588	GKS06-4M □□□071C32	676
	6.6	1.3	8	1.3	12	1.3	510	214.133	GKS06-3M □□□071C32	668
	6.3	1.0	7.6	1.0	11	1.0	525	224.524	GKS06-4M □□□071C32	676
	6.3	2.0	7.7	2.0	11	2.0	522	222.909	GKS07-4M □□□071C32	676
	6.1	1.3	7.4	1.3	11	1.3	549	230.688	GKS06-3M □□□071C32	668
	5.6	1.2	6.8	1.2	10	1.2	590	252.000	GKS06-4M □□□071C32	676
	5.4	1.0	6.6	1.0	9.7	1.0	619	259.880	GKS06-3M □□□071C32	668
	5.2	1.7	6.3	1.7	9.2	1.7	639	273.199	GKS07-4M □□□071C32	676
	5.1	0.8	6.1	0.8	9	0.8	654	279.286	GKS06-4M □□□071C32	676
	4.8	1.0	5.9	1.0	8.6	1.0	694	291.600	GKS06-3M □□□071C32	668
	4.5	1.0	5.4	1.0	8	1.0	741	316.800	GKS06-4M □□□071C32	676
	4.4	1.8	5.3	1.8	7.9	1.8	751	321.049	GKS07-4M □□□071C32	676
	4.3	0.8	5.2	0.8	7.7	0.8	782	328.500	GKS06-3M □□□071C32	668
	3.9	1.3	4.8	1.3	7	1.3	840	358.829	GKS07-4M □□□071C32	676
	3.5	1.4	4.3	1.4	6.3	1.4	934	399.353	GKS07-4M □□□071C32	676
	3	1.0	3.7	1.0	5.4	1.0	1087	464.367	GKS07-4M □□□071C32	676
	2.7	1.1	3.3	1.1	4.9	1.1	1209	516.810	GKS07-4M □□□071C32	676
	2.2	0.9	2.7	0.9	4	0.9	1489	636.581	GKS07-4M □□□071C32	676
	1.7	1.6	2.1	1.6	3.1	1.6	1913	817.551	GKS09-4M □□□071C32	676
	1.5	1.4	1.9	1.4	2.7	1.4	2156	921.367	GKS09-4M □□□071C32	676
	1.4	1.3	1.7	1.3	2.5	1.3	2322	992.209	GKS09-4M □□□071C32	676
	1.3	1.2	1.5	1.2	2.3	1.2	2616	1118.204	GKS09-4M □□□071C32	676
	1.1	1.0	1.4	1.0	2	1.0	2935	1254.197	GKS09-4M □□□071C32	676
	1	0.9	1.2	0.9	1.8	0.9	3307	1413.461	GKS09-4M □□□071C32	676

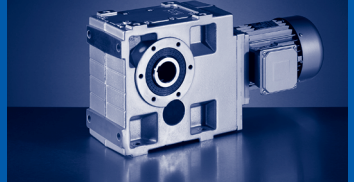

50 Hz: P_N=0.37 kW
60 Hz: P_N=0.45 kW

n_N	950 r/min		1150 r/min				M_2 [Nm]	i		
f_N	50 Hz		60 Hz							
P_N	0.37 kW		0.45 kW							
	n_2 [r/min]	c	n_2 [r/min]	c						
	185	4.5	225	4.5			18	5.123	GKS04-3M □□□080C13	668
	135	3.7	164	3.7			25	7.025	GKS04-3M □□□080C13	668
	116	4.5	141	4.5			29	8.167	GKS04-3M □□□080C13	668
	106	3.2	128	3.2			32	8.991	GKS04-3M □□□080C13	668
	97	3.1	117	3.1			35	9.836	GKS04-3M □□□080C13	668
	81	4.3	98	4.3			41	11.730	GKS04-3M □□□080C13	668
	72	3.6	87	3.6			47	13.176	GKS05-3M □□□080C13	668
	66	3.2	80	3.2			51	14.333	GKS04-3M □□□080C13	668
	59	3.2	72	3.2			57	16.087	GKS04-3M □□□080C13	668
	53	2.6	64	2.6			63	17.920	GKS04-3M □□□080C13	668
	46	2.5	56	2.5			73	20.588	GKS04-3M □□□080C13	668
	42	2.3	51	2.3			80	22.522	GKS04-3M □□□080C13	668
	38	1.9	46	1.9			89	25.088	GKS04-3M □□□080C13	668
	33	1.8	40	1.8			102	28.727	GKS04-3M □□□080C13	668
	32	3.1	38	3.1			106	29.931	GKS05-3M □□□080C13	668
	30	1.5	36	1.5			113	32.000	GKS04-3M □□□080C13	668
	29	2.9	35	2.9			116	32.744	GKS05-3M □□□080C13	668
	27	1.5	33	1.5			124	35.191	GKS04-3M □□□080C13	668
	26	2.3	31	2.3			130	36.894	GKS05-3M □□□080C13	668
	24	1.2	29	1.2			139	39.200	GKS04-3M □□□080C13	668
	23	2.2	28	2.2			148	41.765	GKS05-3M □□□080C13	668
	22	1.2	26	1.2			156	44.240	GKS04-3M □□□080C13	668
	20	1.8	24	1.8			166	47.059	GKS05-3M □□□080C13	668
	19	1.0	23	1.0			180	50.943	GKS04-3M □□□080C13	668
	19	1.8	23	1.8			181	51.162	GKS05-3M □□□080C13	668
	17	0.9	20	0.9			201	56.976	GKS04-3M □□□080C13	668
	17	1.5	20	1.5			204	57.647	GKS05-3M □□□080C13	668
	15	2.7	18	2.7			230	65.207	GKS06-3M □□□080C13	668
	14	1.4	17	1.4			235	66.592	GKS05-3M □□□080C13	668
	13	1.2	15	1.2			265	75.033	GKS05-3M □□□080C13	668
	13	2.8	16	2.8			254	72.000	GKS06-3M □□□080C13	668
	12	1.1	14	1.1			293	82.833	GKS05-3M □□□080C13	668
	12	2.2	14	2.2			287	81.111	GKS06-3M □□□080C13	668
	10	1.0	12	1.0			330	93.333	GKS05-3M □□□080C13	668
	10	2.1	12	2.1			329	93.176	GKS06-3M □□□080C13	668
	9.2	1.9	11	1.9			360	103.721	GKS06-4M □□□080C13	676
	9.1	1.7	11	1.7			371	104.967	GKS06-3M □□□080C13	668
	8.9	0.9	11	0.9			379	107.196	GKS05-3M □□□080C13	668
	8.5	2.7	10	2.7			390	112.391	GKS07-4M □□□080C13	676
	8.4	1.4	10	1.4			393	113.205	GKS06-4M □□□080C13	676
	8.4	1.8	10	1.8			400	113.082	GKS06-3M □□□080C13	668

50 Hz: P_N=0.37 kW
60 Hz: P_N=0.45 kW

n_N	950 r/min		1150 r/min				M_2 [Nm]	i		
f_N	50 Hz		60 Hz							
P_N	0.37 kW		0.45 kW							
	n_2 [r/min]	c	n_2 [r/min]	c						
	7.5	1.4	9	1.4			450	127.392	GKS06-3M □□□080C13	668
	7.5	1.6	9.1	1.6			441	127.059	GKS06-4M □□□080C13	676
	7.5	2.7	9.1	2.7			447	126.578	GKS07-3M □□□080C13	668
	7.5	3.0	9.1	3.0			438	126.222	GKS07-4M □□□080C13	676
	6.9	2.2	8.4	2.2			478	137.748	GKS07-4M □□□080C13	676
	6.8	1.1	8.2	1.1			489	140.816	GKS06-4M □□□080C13	676
	6.7	1.4	8.1	1.4			505	142.941	GKS06-3M □□□080C13	668
	6.1	1.3	7.4	1.3			541	155.647	GKS06-4M □□□080C13	676
	6.1	2.4	7.4	2.4			537	154.622	GKS07-4M □□□080C13	676
	5.9	1.1	7.1	1.1			569	161.029	GKS06-3M □□□080C13	668
	5.5	0.9	6.6	0.9			605	174.336	GKS06-4M □□□080C13	676
	5.3	1.7	6.4	1.7			622	179.201	GKS07-4M □□□080C13	676
	5.2	2.0	6.2	2.0			652	184.600	GKS07-3M □□□080C13	668
	5	1.1	6.1	1.1			672	190.080	GKS06-3M □□□080C13	668
	4.7	1.0	5.7	1.0			704	202.588	GKS06-4M □□□080C13	676
	4.7	1.9	5.7	1.9			699	201.254	GKS07-4M □□□080C13	676
	4.6	1.7	5.5	1.7			735	208.000	GKS07-3M □□□080C13	668
	4.4	0.8	5.4	0.8			757	214.133	GKS06-3M □□□080C13	668
	4.3	1.4	5.2	1.4			774	222.909	GKS07-4M □□□080C13	676
	4.2	1.7	5.1	1.7			792	224.037	GKS07-3M □□□080C13	668
	4.1	0.9	5	0.9			815	230.688	GKS06-3M □□□080C13	668
	3.9	1.5	4.7	1.5			857	246.659	GKS07-4M □□□080C13	676
	3.8	0.8	4.6	0.8			875	252.000	GKS06-4M □□□080C13	676
	3.8	1.4	4.6	1.4			892	252.436	GKS07-3M □□□080C13	668
	3.5	1.1	4.2	1.1			949	273.199	GKS07-4M □□□080C13	676
	3.4	1.3	4.1	1.3			1000	283.193	GKS07-3M □□□080C13	668
	3	1.1	3.6	1.1			1127	319.091	GKS07-3M □□□080C13	668
	3	1.2	3.6	1.2			1115	321.049	GKS07-4M □□□080C13	676
	2.9	2.7	3.6	2.7			1123	323.365	GKS09-4M □□□080C13	676
	2.7	0.9	3.2	0.9			1246	358.829	GKS07-4M □□□080C13	676
	2.6	2.4	3.2	2.4			1266	364.427	GKS09-4M □□□080C13	676
	2.4	1.0	2.9	1.0			1387	399.353	GKS07-4M □□□080C13	676
	2.4	2.2	2.9	2.2			1397	402.234	GKS09-4M □□□080C13	676
	2.1	2.0	2.5	2.0			1574	453.311	GKS09-4M □□□080C13	676
	1.8	1.7	2.2	1.7			1808	520.538	GKS09-4M □□□080C13	676
	1.6	1.5	2	1.5			2037	586.638	GKS09-4M □□□080C13	676
	1.5	1.4	1.8	1.4			2194	631.744	GKS09-4M □□□080C13	676
	1.3	1.3	1.6	1.3			2472	711.965	GKS09-4M □□□080C13	676
	1.2	1.1	1.4	1.1			2839	817.551	GKS09-4M □□□080C13	676
	1.2	2.1	1.4	2.1			2835	816.455	GKS11-4M □□□080C13	676
	1	0.9	1.2	0.9			3446	992.209	GKS09-4M □□□080C13	676

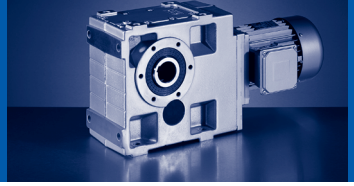

50 Hz: P_N=0.37 kW
60 Hz: P_N=0.45 kW

n_N	950 r/min		1150 r/min				M_2 [Nm]	i		
f_N	50 Hz		60 Hz							
P_N	0.37 kW		0.45 kW							
	n_2 [r/min]	c	n_2 [r/min]	c						
	1	1.0	1.3	1.0			3200	921.367	GKS09-4M □□□080C13	676
	1	1.7	1.2	1.7			3441	990.879	GKS11-4M □□□080C13	676
	1	1.9	1.3	1.9			3195	919.949	GKS11-4M □□□080C13	676
	0.9	1.6	1	1.6			3877	1116.484	GKS11-4M □□□080C13	676
	0.8	1.4	0.9	1.4			4350	1252.516	GKS11-4M □□□080C13	676
	0.7	1.2	0.8	1.2			4901	1411.286	GKS11-4M □□□080C13	676

50 Hz: P_N=0.55 kW
60 Hz: P_N=0.68 kW

n_N	2630 r/min		3230 r/min				M_2 [Nm]	i		
f_N	50 Hz		60 Hz							
P_N	0.55 kW		0.68 kW							
	n_2 [r/min]	c	n_2 [r/min]	c						
	513	4.1	631	3.8			10	5.123	GKS04-3M □□□071C31	668
	374	4.1	460	3.8			13	7.025	GKS04-3M □□□071C31	668
	322	4.1	396	3.8			16	8.167	GKS04-3M □□□071C31	668
	293	4.7	359	4.4			17	8.991	GKS04-3M □□□071C31	668
	267	4.7	328	4.4			19	9.836	GKS04-3M □□□071C31	668
	224	4.1	275	3.8			22	11.730	GKS04-3M □□□071C31	668
	201	4.1	247	3.8			25	13.067	GKS04-3M □□□071C31	668
	184	4.7	225	4.4			27	14.333	GKS04-3M □□□071C31	668
	164	4.1	201	3.8			31	16.087	GKS04-3M □□□071C31	668
	147	4.1	180	3.8			34	17.920	GKS04-3M □□□071C31	668
	128	3.9	157	3.6			39	20.588	GKS04-3M □□□071C31	668
	117	3.5	143	3.3			43	22.522	GKS04-3M □□□071C31	668
	105	2.9	129	2.7			48	25.088	GKS04-3M □□□071C31	668
	92	2.8	112	2.6			55	28.727	GKS04-3M □□□071C31	668
	82	2.3	101	2.1			61	32.000	GKS04-3M □□□071C31	668
	75	2.3	92	2.1			67	35.191	GKS04-3M □□□071C31	668
	67	1.9	82	1.8			74	39.200	GKS04-3M □□□071C31	668
	59	2.1	73	1.9			84	44.240	GKS04-3M □□□071C31	668
	56	3.2	69	3.0			89	47.059	GKS05-3M □□□071C31	668
	52	1.8	63	1.7			97	50.943	GKS04-3M □□□071C31	668
	46	1.6	57	1.5			108	56.976	GKS04-3M □□□071C31	668
	41	1.4	50	1.3			123	64.978	GKS04-3M □□□071C31	668
	40	2.5	49	2.3			126	66.592	GKS05-3M □□□071C31	668
	36	1.3	45	1.2			137	72.210	GKS04-3M □□□071C31	668
	35	2.1	43	1.9			142	75.033	GKS05-3M □□□071C31	668
	33	1.1	41	1.1			151	79.598	GKS04-3M □□□071C31	668
	32	2.0	39	1.9			157	82.833	GKS05-3M □□□071C31	668
	29	1.0	36	1.0			172	90.491	GKS04-3M □□□071C31	668
	28	0.9	34	0.8			178	95.238	GKS05-4M □□□071C31	676
	28	1.7	35	1.6			177	93.333	GKS05-3M □□□071C31	668
	26	0.9	32	0.9			190	100.067	GKS04-3M □□□071C31	668
	25	1.5	30	1.4			203	107.196	GKS05-3M □□□071C31	668
	25	3.0	31	2.8			199	104.967	GKS06-3M □□□071C31	668
	24	0.8					211	111.467	GKS04-3M □□□071C31	668
	23	1.2	28	1.2			214	114.987	GKS05-4M □□□071C31	676
	23	2.5	29	2.5			211	113.205	GKS06-4M □□□071C31	676
	22	1.4	27	1.3			229	120.784	GKS05-3M □□□071C31	668
	21	1.2	25	1.2			237	126.933	GKS05-4M □□□071C31	676
	21	2.6	25	2.6			242	127.392	GKS06-3M □□□071C31	668
	21	2.9	25	2.8			237	127.059	GKS06-4M □□□071C31	676
	20	1.3	25	1.3			247	130.097	GKS05-3M □□□071C31	668

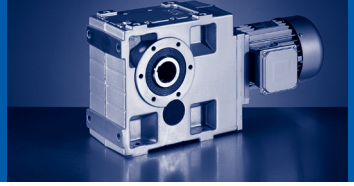

50 Hz: P_N=0.55 kW
60 Hz: P_N=0.68 kW

n_N	2630 r/min		3230 r/min				M_2 [Nm]	i		
f_N	50 Hz		60 Hz							
P_N	0.55 kW		0.68 kW							
	n_2 [r/min]	c	n_2 [r/min]	c						
	19	2.1	23	2.0			263	140.816	GKS06-4M □□□071C31	676
	18	0.9	22	0.9			274	146.667	GKS05-4M □□□071C31	676
	18	1.1	22	1.1			278	146.588	GKS05-3M □□□071C31	668
	18	2.6	23	2.5			271	142.941	GKS06-3M □□□071C31	668
	17	2.4	21	2.3			290	155.647	GKS06-4M □□□071C31	676
	16	0.9	20	0.9			302	161.905	GKS05-4M □□□071C31	676
	16	1.1	19	1.0			315	166.276	GKS05-3M □□□071C31	668
	16	2.1	20	2.0			306	161.029	GKS06-3M □□□071C31	668
	15	1.7	19	1.6			325	174.336	GKS06-4M □□□071C31	676
	15	3.2	18	3.1			334	179.201	GKS07-4M □□□071C31	676
	14	0.9	17	0.9			355	187.353	GKS05-3M □□□071C31	668
	14	1.0	17	0.9			346	185.547	GKS05-4M □□□071C31	676
	14	2.0	17	1.9			361	190.080	GKS06-3M □□□071C31	668
	13	0.8					390	209.067	GKS05-4M □□□071C31	676
	13	1.8	16	1.8			378	202.588	GKS06-4M □□□071C31	676
	12	1.3	14	1.3			419	224.524	GKS06-4M □□□071C31	676
	12	1.6	15	1.5			406	214.133	GKS06-3M □□□071C31	668
	12	2.5	15	2.5			416	222.909	GKS07-4M □□□071C31	676
	11	1.6	14	1.6			438	230.688	GKS06-3M □□□071C31	668
	10	1.3	12	1.3			493	259.880	GKS06-3M □□□071C31	668
	10	1.5	13	1.5			470	252.000	GKS06-4M □□□071C31	676
	9.6	2.1	12	2.0			509	273.199	GKS07-4M □□□071C31	676
	9.4	1.0	12	1.0			521	279.286	GKS06-4M □□□071C31	676
	9	1.3	11	1.2			553	291.600	GKS06-3M □□□071C31	668
	8.3	1.2	10	1.2			591	316.800	GKS06-4M □□□071C31	676
	8.2	2.2	10	2.2			599	321.049	GKS07-4M □□□071C31	676
	8	1.0	9.8	1.0			623	328.500	GKS06-3M □□□071C31	668
	7.3	1.6	9	1.5			669	358.829	GKS07-4M □□□071C31	676
	6.6	1.8	8.1	1.7			745	399.353	GKS07-4M □□□071C31	676
	6.5	0.9	7.9	0.9			761	408.000	GKS06-4M □□□071C31	676
	5.7	1.2	7	1.2			866	464.367	GKS07-4M □□□071C31	676
	5.1	1.4	6.3	1.3			964	516.810	GKS07-4M □□□071C31	676
	4.7	1.0	5.7	1.0			1051	563.572	GKS07-4M □□□071C31	676
	4.1	1.1	5.1	1.1			1187	636.581	GKS07-4M □□□071C31	676
	3.9	0.8	4.7	0.8			1275	683.972	GKS07-4M □□□071C31	676
	3.2	0.9	3.9	0.8			1536	823.810	GKS07-4M □□□071C31	676
	3.2	2.0	4	1.9			1524	817.551	GKS09-4M □□□071C31	676
	2.9	1.8	3.5	1.8			1718	921.367	GKS09-4M □□□071C31	676
	2.7	1.6	3.3	1.6			1850	992.209	GKS09-4M □□□071C31	676
	2.4	1.5	2.9	1.4			2085	1118.204	GKS09-4M □□□071C31	676
	2.1	1.3	2.6	1.3			2339	1254.197	GKS09-4M □□□071C31	676

50 Hz: P_N=0.55 kW
60 Hz: P_N=0.68 kW

n_N	2630 r/min		3230 r/min				M_2 [Nm]	i		
f_N	50 Hz		60 Hz							
P_N	0.55 kW		0.68 kW							
	n_2 [r/min]	c	n_2 [r/min]	c						
	1.9	1.2	2.3	1.1			2636	1413.461	GKS09-4M □□□071C31	676

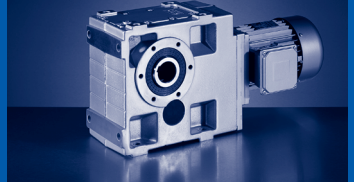

50 Hz: P_N=0.55 kW
60 Hz: P_N=0.68 kW
87 Hz: P_N=1.0 kW

n_N	1405 r/min		1705 r/min		2515 r/min		M_2 [Nm]	i		
f_N	50 Hz		60 Hz		87 Hz					
P_N	0.55 kW		0.68 kW		1.0 kW					
	n_2 [r/min]	c	n_2 [r/min]	c	n_2 [r/min]	c				
	274	4.4	333	4.2	491	3.7	18	5.123	GKS04-3M □□□071C42	668
	200	3.7	243	3.6	358	3.1	25	7.025	GKS04-3M □□□071C42	668
	172	4.4	209	4.2	308	3.7	29	8.167	GKS04-3M □□□071C42	668
	156	3.2	190	3.1	280	2.7	32	8.991	GKS04-3M □□□071C42	668
	143	3.0	173	2.9	256	2.6	35	9.836	GKS04-3M □□□071C42	668
	120	4.3	145	4.1	214	3.6	42	11.730	GKS04-3M □□□071C42	668
	107	3.5	129	3.4	191	3.0	47	13.176	GKS05-3M □□□071C42	668
	98	3.2	119	3.1	176	2.7	51	14.333	GKS04-3M □□□071C42	668
	87	3.2	106	3.0	156	2.7	57	16.087	GKS04-3M □□□071C42	668
	78	2.6	95	2.5	140	2.2	64	17.920	GKS04-3M □□□071C42	668
	68	2.5	83	2.4	122	2.1	73	20.588	GKS04-3M □□□071C42	668
	62	2.3	76	2.2	112	1.9	80	22.522	GKS04-3M □□□071C42	668
	56	1.9	68	1.8	100	1.6	89	25.088	GKS04-3M □□□071C42	668
	49	1.8	59	1.7	88	1.5	102	28.727	GKS04-3M □□□071C42	668
	47	3.1	57	3.0	84	2.6	106	29.931	GKS05-3M □□□071C42	668
	44	1.5	53	1.4	79	1.2	114	32.000	GKS04-3M □□□071C42	668
	43	2.9	52	2.7	77	2.4	116	32.744	GKS05-3M □□□071C42	668
	40	1.5	49	1.4	72	1.2	125	35.191	GKS04-3M □□□071C42	668
	38	2.3	46	2.2	68	1.9	131	36.894	GKS05-3M □□□071C42	668
	36	1.2	44	1.2	64	1.0	139	39.200	GKS04-3M □□□071C42	668
	34	2.2	41	2.1	60	1.9	148	41.765	GKS05-3M □□□071C42	668
	32	1.2	39	1.2	57	1.1	157	44.240	GKS04-3M □□□071C42	668
	30	1.8	36	1.8	53	1.7	167	47.059	GKS05-3M □□□071C42	668
	28	1.0	34	1.0	49	1.0	181	50.943	GKS04-3M □□□071C42	668
	28	1.8	33	1.8	49	1.7	182	51.162	GKS05-3M □□□071C42	668
	25	0.9	30	0.9	44	0.9	202	56.976	GKS04-3M □□□071C42	668
	24	1.5	30	1.5	44	1.4	205	57.647	GKS05-3M □□□071C42	668
	22	2.7	26	2.7	39	2.6	232	65.207	GKS06-3M □□□071C42	668
	21	1.4	26	1.4	38	1.3	236	66.592	GKS05-3M □□□071C42	668
	20	2.8	24	2.8	35	2.6	256	72.000	GKS06-3M □□□071C42	668
	19	1.2	23	1.2	34	1.1	266	75.033	GKS05-3M □□□071C42	668
	17	1.1	21	1.1	30	1.1	294	82.833	GKS05-3M □□□071C42	668
	17	2.2	21	2.2	31	2.1	288	81.111	GKS06-3M □□□071C42	668
	15	1.0	18	1.0	27	0.9	331	93.333	GKS05-3M □□□071C42	668
	15	2.1	18	2.1	27	2.0	331	93.176	GKS06-3M □□□071C42	668
	14	1.9	16	1.9	24	1.8	362	103.721	GKS06-4M □□□071C42	676
	13	0.9	16	0.9	24	0.8	381	107.196	GKS05-3M □□□071C42	668
	13	1.7	16	1.7	24	1.6	373	104.967	GKS06-3M □□□071C42	668
	13	2.7	15	2.7	22	2.7	392	112.391	GKS07-4M □□□071C42	676
	12	1.4	15	1.4	22	1.4	395	113.205	GKS06-4M □□□071C42	676
	12	1.8	15	1.8	22	1.8	402	113.082	GKS06-3M □□□071C42	668

50 Hz: P_N=0.55 kW
60 Hz: P_N=0.68 kW
87 Hz: P_N=1.0 kW

n_N	1405 r/min		1705 r/min		2515 r/min		M_2 [Nm]	i		
f_N	50 Hz		60 Hz		87 Hz					
P_N	0.55 kW		0.68 kW		1.0 kW					
	n_2 [r/min]	c	n_2 [r/min]	c	n_2 [r/min]	c				
	11	1.4	13	1.4	20	1.4	452	127.392	GKS06-3M □□□071C42	668
	11	1.6	13	1.6	20	1.6	444	127.059	GKS06-4M □□□071C42	676
	11	3.0	14	3.0	20	3.0	441	126.222	GKS07-4M □□□071C42	676
	10	1.1	12	1.1	18	1.1	492	140.816	GKS06-4M □□□071C42	676
	10	2.2	12	2.2	18	2.2	481	137.748	GKS07-4M □□□071C42	676
	9.8	1.4	12	1.4	18	1.4	508	142.941	GKS06-3M □□□071C42	668
	9.1	2.4	11	2.4	16	2.4	540	154.622	GKS07-4M □□□071C42	676
	9	1.3	11	1.3	16	1.3	543	155.647	GKS06-4M □□□071C42	676
	8.7	1.1	11	1.1	16	1.1	572	161.029	GKS06-3M □□□071C42	668
	8.1	0.9	9.8	0.9	14	0.9	609	174.336	GKS06-4M □□□071C42	676
	7.8	1.7	9.5	1.7	14	1.7	626	179.201	GKS07-4M □□□071C42	676
	7.4	1.0	9	1.0	13	1.0	675	190.080	GKS06-3M □□□071C42	668
	7	1.9	8.5	1.9	13	1.9	703	201.254	GKS07-4M □□□071C42	676
	6.9	1.0	8.4	1.0	12	1.0	707	202.588	GKS06-4M □□□071C42	676
	6.6	0.8	8	0.8	12	0.8	760	214.133	GKS06-3M □□□071C42	668
	6.3	1.4	7.7	1.4	11	1.4	778	222.909	GKS07-4M □□□071C42	676
	6.1	0.9	7.4	0.9	11	0.9	819	230.688	GKS06-3M □□□071C42	668
	5.7	1.5	6.9	1.5	10	1.5	861	246.659	GKS07-4M □□□071C42	676
	5.1	1.1	6.2	1.1	9.2	1.1	954	273.199	GKS07-4M □□□071C42	676
	4.4	1.2	5.3	1.2	7.8	1.2	1121	321.049	GKS07-4M □□□071C42	676
	4.3	2.7	5.3	2.7	7.8	2.7	1129	323.365	GKS09-4M □□□071C42	676
	3.9	0.8	4.8	0.8	7	0.8	1252	358.829	GKS07-4M □□□071C42	676
	3.9	2.4	4.7	2.4	6.9	2.4	1272	364.427	GKS09-4M □□□071C42	676
	3.5	1.0	4.3	1.0	6.3	1.0	1394	399.353	GKS07-4M □□□071C42	676
	3.5	2.2	4.2	2.2	6.3	2.2	1404	402.234	GKS09-4M □□□071C42	676
	3.1	1.9	3.8	1.9	5.6	1.9	1582	453.311	GKS09-4M □□□071C42	676
	2.7	1.7	3.3	1.7	4.8	1.7	1817	520.538	GKS09-4M □□□071C42	676
	2.4	1.5	2.9	1.5	4.3	1.5	2048	586.638	GKS09-4M □□□071C42	676
	2.2	1.4	2.7	1.4	4	1.4	2205	631.744	GKS09-4M □□□071C42	676
	2	1.2	2.4	1.2	3.5	1.2	2485	711.965	GKS09-4M □□□071C42	676
	1.7	1.1	2.1	1.1	3.1	1.1	2854	817.551	GKS09-4M □□□071C42	676
	1.5	1.0	1.9	1.0	2.7	1.0	3216	921.367	GKS09-4M □□□071C42	676
	1.4	0.9	1.7	0.9	2.5	0.9	3463	992.209	GKS09-4M □□□071C42	676

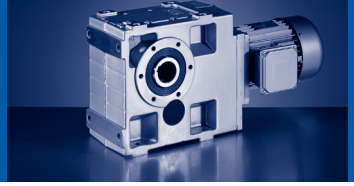

50 Hz: P_N=0.55 kW
60 Hz: P_N=0.66 kW

n_N	930 r/min		1130 r/min				M_2 [Nm]	i		
f_N	50 Hz		60 Hz							
P_N	0.55 kW		0.66 kW							
	n_2 [r/min]	c	n_2 [r/min]	c						
	182	2.9	221	2.9			28	5.123	GKS04-3M □□□080C33	668
	132	2.5	161	2.5			38	7.025	GKS04-3M □□□080C33	668
	114	2.9	138	2.9			44	8.167	GKS04-3M □□□080C33	668
	103	2.1	126	2.1			48	8.991	GKS04-3M □□□080C33	668
	95	2.0	115	2.0			53	9.836	GKS04-3M □□□080C33	668
	79	2.9	96	2.9			63	11.730	GKS04-3M □□□080C33	668
	71	2.3	86	2.3			71	13.176	GKS05-3M □□□080C33	668
	71	2.4	87	2.4			70	13.067	GKS04-3M □□□080C33	668
	65	2.1	79	2.1			77	14.333	GKS04-3M □□□080C33	668
	58	2.1	70	2.1			86	16.087	GKS04-3M □□□080C33	668
	52	1.7	63	1.7			96	17.920	GKS04-3M □□□080C33	668
	45	1.7	55	1.7			110	20.588	GKS04-3M □□□080C33	668
	41	1.5	50	1.5			121	22.522	GKS04-3M □□□080C33	668
	37	1.2	45	1.2			135	25.088	GKS04-3M □□□080C33	668
	32	1.2	39	1.2			154	28.727	GKS04-3M □□□080C33	668
	31	2.1	38	2.1			161	29.931	GKS05-3M □□□080C33	668
	29	1.0	35	1.0			172	32.000	GKS04-3M □□□080C33	668
	28	1.9	35	1.9			176	32.744	GKS05-3M □□□080C33	668
	26	1.0	32	1.0			189	35.191	GKS04-3M □□□080C33	668
	25	1.5	31	1.5			198	36.894	GKS05-3M □□□080C33	668
	22	1.5	27	1.5			224	41.765	GKS05-3M □□□080C33	668
	20	1.2	24	1.2			252	47.059	GKS05-3M □□□080C33	668
	18	1.2	22	1.2			274	51.162	GKS05-3M □□□080C33	668
	16	1.0	20	1.0			309	57.647	GKS05-3M □□□080C33	668
	16	2.2	20	2.2			311	57.882	GKS06-3M □□□080C33	668
	14	0.9	17	0.9			357	66.592	GKS05-3M □□□080C33	668
	14	1.8	17	1.8			350	65.207	GKS06-3M □□□080C33	668
	13	1.8	16	1.8			386	72.000	GKS06-3M □□□080C33	668
	12	1.5	14	1.5			435	81.111	GKS06-3M □□□080C33	668
	10	1.4	12	1.4			500	93.176	GKS06-3M □□□080C33	668
	10	2.6	12	2.6			497	92.563	GKS07-3M □□□080C33	668
	9	1.3	11	1.3			547	103.721	GKS06-4M □□□080C33	676
	9	2.4	11	2.4			543	103.039	GKS07-4M □□□080C33	676
	8.9	1.1	11	1.1			563	104.967	GKS06-3M □□□080C33	668
	8.9	2.2	11	2.2			560	104.296	GKS07-3M □□□080C33	668
	8.3	1.8	10	1.8			593	112.391	GKS07-4M □□□080C33	676
	8.3	2.2	10	2.2			603	112.338	GKS07-3M □□□080C33	668
	8.2	0.9	10	0.9			597	113.205	GKS06-4M □□□080C33	676
	8.2	1.2	10	1.2			607	113.082	GKS06-3M □□□080C33	668
	7.4	1.8	8.9	1.8			679	126.578	GKS07-3M □□□080C33	668
	7.4	2.0	9	2.0			666	126.222	GKS07-4M □□□080C33	676

50 Hz: P_N=0.55 kW
60 Hz: P_N=0.66 kW

n_N	930 r/min		1130 r/min				M_2 [Nm]	i		
f_N	50 Hz		60 Hz							
P_N	0.55 kW		0.66 kW							
	n_2 [r/min]	c	n_2 [r/min]	c						
	7.3	0.9	8.9	0.9			683	127.392	GKS06-3M □□□080C33	668
	7.3	1.0	8.9	1.0			670	127.059	GKS06-4M □□□080C33	676
	6.8	1.5	8.2	1.5			726	137.748	GKS07-4M □□□080C33	676
	6.5	0.9	7.9	0.9			767	142.941	GKS06-3M □□□080C33	668
	6	0.8	7.3	0.8			821	155.647	GKS06-4M □□□080C33	676
	6	1.6	7.3	1.6			815	154.622	GKS07-4M □□□080C33	676
	5.2	1.1	6.3	1.1			945	179.201	GKS07-4M □□□080C33	676
	5	1.3	6.1	1.3			990	184.600	GKS07-3M □□□080C33	668
	4.6	1.2	5.6	1.2			1061	201.254	GKS07-4M □□□080C33	676
	4.5	1.1	5.4	1.1			1116	208.000	GKS07-3M □□□080C33	668
	4.2	0.9	5.1	0.9			1175	222.909	GKS07-4M □□□080C33	676
	4.2	1.1	5	1.1			1202	224.037	GKS07-3M □□□080C33	668
	3.8	1.0	4.6	1.0			1301	246.659	GKS07-4M □□□080C33	676
	3.7	0.9	4.5	0.9			1354	252.436	GKS07-3M □□□080C33	668
	3.3	0.9	4	0.9			1519	283.193	GKS07-3M □□□080C33	668
	2.9	1.8	3.5	1.8			1705	323.365	GKS09-4M □□□080C33	676
	2.6	1.6	3.1	1.6			1922	364.427	GKS09-4M □□□080C33	676
	2.3	1.4	2.8	1.4			2121	402.234	GKS09-4M □□□080C33	676
	2.1	1.3	2.5	1.3			2390	453.311	GKS09-4M □□□080C33	676
	1.8	1.1	2.2	1.1			2745	520.538	GKS09-4M □□□080C33	676
	1.6	1.0	1.9	1.0			3093	586.638	GKS09-4M □□□080C33	676
	1.5	0.9	1.8	0.9			3331	631.744	GKS09-4M □□□080C33	676
	1.3	0.8	1.6	0.8			3754	711.965	GKS09-4M □□□080C33	676
	1.1	1.4	1.4	1.4			4305	816.455	GKS11-4M □□□080C33	676
	1	1.3	1.2	1.3			4851	919.949	GKS11-4M □□□080C33	676
	0.9	1.1	1.1	1.1			5225	990.879	GKS11-4M □□□080C33	676
	0.8	1.0	1	1.0			5887	1116.484	GKS11-4M □□□080C33	676
	0.7	0.8	0.8	0.8			7442	1411.286	GKS11-4M □□□080C33	676
	0.7	0.9	0.9	0.9			6605	1252.516	GKS11-4M □□□080C33	676

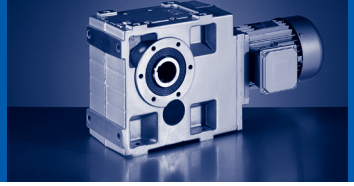

50 Hz: P_N=0.75 kW
60 Hz: P_N=0.92 kW

n_N	2720 r/min		3320 r/min				M_2 [Nm]	i		
f_N	50 Hz		60 Hz							
P_N	0.75 kW		0.92 kW							
	n_2 [r/min]	c	n_2 [r/min]	c						
	531	5.2	648	4.8			13	5.123	GKS04-3M □□□080C11	668
	387	4.3	473	4.0			18	7.025	GKS04-3M □□□080C11	668
	333	5.2	407	4.8			20	8.167	GKS04-3M □□□080C11	668
	303	3.8	369	3.5			23	8.991	GKS04-3M □□□080C11	668
	277	3.5	338	3.3			25	9.836	GKS04-3M □□□080C11	668
	232	5.0	283	4.7			29	11.730	GKS04-3M □□□080C11	668
	206	4.1	252	3.9			33	13.176	GKS05-3M □□□080C11	668
	190	3.8	232	3.5			36	14.333	GKS04-3M □□□080C11	668
	169	3.7	206	3.5			40	16.087	GKS04-3M □□□080C11	668
	152	3.0	185	2.8			45	17.920	GKS04-3M □□□080C11	668
	132	2.9	161	2.7			52	20.588	GKS04-3M □□□080C11	668
	121	2.7	147	2.5			56	22.522	GKS04-3M □□□080C11	668
	108	2.2	132	2.0			63	25.088	GKS04-3M □□□080C11	668
	95	2.1	116	2.0			72	28.727	GKS04-3M □□□080C11	668
	85	1.7	104	1.6			80	32.000	GKS04-3M □□□080C11	668
	77	1.7	94	1.6			88	35.191	GKS04-3M □□□080C11	668
	74	2.7	90	2.5			92	36.894	GKS05-3M □□□080C11	668
	69	1.4	85	1.3			98	39.200	GKS04-3M □□□080C11	668
	65	2.6	80	2.4			105	41.765	GKS05-3M □□□080C11	668
	62	1.6	75	1.5			111	44.240	GKS04-3M □□□080C11	668
	58	2.4	71	2.3			118	47.059	GKS05-3M □□□080C11	668
	53	1.3	65	1.3			127	50.943	GKS04-3M □□□080C11	668
	53	2.4	65	2.3			128	51.162	GKS05-3M □□□080C11	668
	48	1.2	58	1.1			143	56.976	GKS04-3M □□□080C11	668
	47	2.0	58	1.9			144	57.647	GKS05-3M □□□080C11	668
	42	1.1	51	1.0			163	64.978	GKS04-3M □□□080C11	668
	41	1.9	50	1.7			167	66.592	GKS05-3M □□□080C11	668
	36	1.5	44	1.4			188	75.033	GKS05-3M □□□080C11	668
	34	0.9	42	0.8			199	79.598	GKS04-3M □□□080C11	668
	34	2.9	41	2.7			203	81.111	GKS06-3M □□□080C11	668
	33	1.5	40	1.4			207	82.833	GKS05-3M □□□080C11	668
	29	1.3	36	1.2			233	93.333	GKS05-3M □□□080C11	668
	29	2.8	36	2.6			233	93.176	GKS06-3M □□□080C11	668
	26	2.3	32	2.1			263	104.967	GKS06-3M □□□080C11	668
	26	2.5	32	2.3			255	103.721	GKS06-4M □□□080C11	676
	25	1.2	31	1.1			268	107.196	GKS05-3M □□□080C11	668
	24	0.9	29	0.9			283	114.987	GKS05-4M □□□080C11	676
	24	1.9	29	1.9			278	113.205	GKS06-4M □□□080C11	676
	24	2.5	29	2.4			283	113.082	GKS06-3M □□□080C11	668
	23	1.0	28	1.0			302	120.784	GKS05-3M □□□080C11	668
	21	0.9	26	0.9			312	126.933	GKS05-4M □□□080C11	676

50 Hz: P_N=0.75 kW
60 Hz: P_N=0.92 kW

n_N	2720 r/min		3320 r/min				M_2 [Nm]	i		
f_N	50 Hz		60 Hz							
P_N	0.75 kW		0.92 kW							
	n_2 [r/min]	c	n_2 [r/min]	c						
	21	1.0	26	1.0			325	130.097	GKS05-3M □□□080C11	668
	21	2.0	26	1.9			319	127.392	GKS06-3M □□□080C11	668
	21	2.2	26	2.1			312	127.059	GKS06-4M □□□080C11	676
	20	3.1	24	3.0			339	137.748	GKS07-4M □□□080C11	676
	19	0.9	23	0.8			367	146.588	GKS05-3M □□□080C11	668
	19	1.6	24	1.5			346	140.816	GKS06-4M □□□080C11	676
	19	2.0	23	1.9			358	142.941	GKS06-3M □□□080C11	668
	18	1.8	21	1.7			383	155.647	GKS06-4M □□□080C11	676
	17	1.6	21	1.5			403	161.029	GKS06-3M □□□080C11	668
	16	1.3	19	1.2			429	174.336	GKS06-4M □□□080C11	676
	15	2.4	19	2.3			441	179.201	GKS07-4M □□□080C11	676
	15	2.9	18	2.8			462	184.600	GKS07-3M □□□080C11	668
	14	1.5	18	1.4			475	190.080	GKS06-3M □□□080C11	668
	14	2.7	17	2.6			495	201.254	GKS07-4M □□□080C11	676
	13	1.2	16	1.2			536	214.133	GKS06-3M □□□080C11	668
	13	1.4	16	1.4			498	202.588	GKS06-4M □□□080C11	676
	13	2.3	16	2.3			520	208.000	GKS07-3M □□□080C11	668
	12	1.0	15	0.9			552	224.524	GKS06-4M □□□080C11	676
	12	1.2	14	1.2			577	230.688	GKS06-3M □□□080C11	668
	12	1.9	15	1.9			548	222.909	GKS07-4M □□□080C11	676
	12	2.4	15	2.3			560	224.037	GKS07-3M □□□080C11	668
	11	1.0	13	0.9			650	259.880	GKS06-3M □□□080C11	668
	11	1.1	13	1.1			620	252.000	GKS06-4M □□□080C11	676
	11	1.9	13	1.9			631	252.436	GKS07-3M □□□080C11	668
	11	2.2	14	2.1			606	246.659	GKS07-4M □□□080C11	676
	10	1.6	12	1.5			672	273.199	GKS07-4M □□□080C11	676
	9.6	1.9	12	1.8			708	283.193	GKS07-3M □□□080C11	668
	9.3	1.0	11	0.9			729	291.600	GKS06-3M □□□080C11	668
	8.6	0.9	11	0.9			779	316.800	GKS06-4M □□□080C11	676
	8.5	1.5	10	1.5			798	319.091	GKS07-3M □□□080C11	668
	8.5	1.7	10	1.6			789	321.049	GKS07-4M □□□080C11	676
	7.6	1.2	9.3	1.2			882	358.829	GKS07-4M □□□080C11	676
	6.8	1.3	8.3	1.3			982	399.353	GKS07-4M □□□080C11	676
	6.8	3.1	8.3	3.0			989	402.234	GKS09-4M □□□080C11	676
	6	2.8	7.3	2.7			1115	453.311	GKS09-4M □□□080C11	676
	5.9	0.9	7.2	0.9			1142	464.367	GKS07-4M □□□080C11	676
	5.3	1.0	6.4	1.0			1271	516.810	GKS07-4M □□□080C11	676
	5.2	2.4	6.4	2.3			1280	520.538	GKS09-4M □□□080C11	676
	4.6	2.1	5.7	2.1			1442	586.638	GKS09-4M □□□080C11	676
	4.3	0.9	5.2	0.8			1565	636.581	GKS07-4M □□□080C11	676
	4.3	2.0	5.3	1.9			1553	631.744	GKS09-4M □□□080C11	676

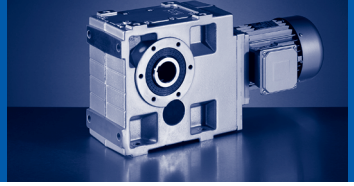

50 Hz: P_N=0.75 kW
60 Hz: P_N=0.92 kW

n_N	2720 r/min		3320 r/min				M_2 [Nm]	i		
f_N	50 Hz		60 Hz							
P_N	0.75 kW		0.92 kW							
	n_2 [r/min]	c	n_2 [r/min]	c						
	3.8	1.8	4.7	1.7			1750	711.965	GKS09-4M □□□080C11	676
	3.3	1.5	4.1	1.5			2010	817.551	GKS09-4M □□□080C11	676
	3.3	3.0	4.1	2.9			2007	816.455	GKS11-4M □□□080C11	676
	3	1.4	3.6	1.3			2265	921.367	GKS09-4M □□□080C11	676
	3	2.7	3.6	2.6			2262	919.949	GKS11-4M □□□080C11	676
	2.8	2.5	3.4	2.4			2436	990.879	GKS11-4M □□□080C11	676
	2.7	1.2	3.4	1.2			2439	992.209	GKS09-4M □□□080C11	676
	2.4	1.1	3	1.1			2749	1118.204	GKS09-4M □□□080C11	676
	2.4	2.2	3	2.1			2745	1116.484	GKS11-4M □□□080C11	676
	2.2	1.0	2.7	1.0			3084	1254.197	GKS09-4M □□□080C11	676
	2.2	1.9	2.7	1.9			3079	1252.516	GKS11-4M □□□080C11	676
	1.9	0.9	2.4	0.9			3475	1413.461	GKS09-4M □□□080C11	676
	1.9	1.8	2.4	1.7			3470	1411.286	GKS11-4M □□□080C11	676

50 Hz: P_N=0.75 kW
60 Hz: P_N=0.92 kW
87 Hz: P_N=1.35 kW

n_N	1410 r/min		1710 r/min		2520 r/min		M_2 [Nm]	i		
f_N	50 Hz		60 Hz		87 Hz					
P_N	0.75 kW		0.92 kW		1.35 kW					
	n_2 [r/min]	c	n_2 [r/min]	c	n_2 [r/min]	c				
	275	3.3	334	3.1	492	2.7	25	5.123	GKS04-3M □□□080C32	668
	201	2.7	243	2.6	359	2.3	34	7.025	GKS04-3M □□□080C32	668
	173	3.3	209	3.1	309	2.7	39	8.167	GKS04-3M □□□080C32	668
	157	2.4	190	2.3	280	2.0	43	8.991	GKS04-3M □□□080C32	668
	143	2.2	174	2.1	256	1.9	48	9.836	GKS04-3M □□□080C32	668
	120	3.2	146	3.0	215	2.7	57	11.730	GKS04-3M □□□080C32	668
	108	2.6	131	2.5	193	2.2	63	13.067	GKS04-3M □□□080C32	668
	107	2.6	130	2.5	191	2.2	64	13.176	GKS05-3M □□□080C32	668
	98	2.4	119	2.3	176	2.0	69	14.333	GKS04-3M □□□080C32	668
	88	2.3	106	2.2	157	2.0	78	16.087	GKS04-3M □□□080C32	668
	79	1.9	95	1.8	141	1.6	87	17.920	GKS04-3M □□□080C32	668
	69	1.8	83	1.8	122	1.5	99	20.588	GKS04-3M □□□080C32	668
	63	1.7	76	1.6	112	1.4	109	22.522	GKS04-3M □□□080C32	668
	56	1.4	68	1.3	100	1.2	121	25.088	GKS04-3M □□□080C32	668
	49	1.3	60	1.3	88	1.1	139	28.727	GKS04-3M □□□080C32	668
	47	2.3	57	2.2	84	1.9	144	29.931	GKS05-3M □□□080C32	668
	44	1.1	53	1.0	79	0.9	154	32.000	GKS04-3M □□□080C32	668
	43	2.1	52	2.0	77	1.8	158	32.744	GKS05-3M □□□080C32	668
	40	1.1	49	1.0	72	0.9	170	35.191	GKS04-3M □□□080C32	668
	38	1.7	46	1.6	68	1.4	178	36.894	GKS05-3M □□□080C32	668
	36	0.9	44	0.9			189	39.200	GKS04-3M □□□080C32	668
	34	1.6	41	1.6	60	1.4	202	41.765	GKS05-3M □□□080C32	668
	32	0.9	39	0.9	57	0.8	213	44.240	GKS04-3M □□□080C32	668
	30	1.3	36	1.3	54	1.3	227	47.059	GKS05-3M □□□080C32	668
	28	1.3	33	1.3	49	1.3	247	51.162	GKS05-3M □□□080C32	668
	25	1.1	30	1.1	44	1.1	278	57.647	GKS05-3M □□□080C32	668
	24	2.5	30	2.5	44	2.4	279	57.882	GKS06-3M □□□080C32	668
	22	2.0	26	2.0	39	1.9	315	65.207	GKS06-3M □□□080C32	668
	21	1.0	26	1.0	38	1.0	321	66.592	GKS05-3M □□□080C32	668
	20	2.0	24	2.0	35	1.9	347	72.000	GKS06-3M □□□080C32	668
	19	0.9	23	0.9	34	0.8	362	75.033	GKS05-3M □□□080C32	668
	17	0.8	21	0.8			400	82.833	GKS05-3M □□□080C32	668
	17	1.6	21	1.6	31	1.5	391	81.111	GKS06-3M □□□080C32	668
	15	1.6	18	1.6	27	1.5	450	93.176	GKS06-3M □□□080C32	668
	15	2.9	19	2.9	27	2.8	447	92.563	GKS07-3M □□□080C32	668
	14	1.4	17	1.4	24	1.3	492	103.721	GKS06-4M □□□080C32	676
	14	2.4	16	2.4	24	2.3	503	104.296	GKS07-3M □□□080C32	668
	14	2.6	17	2.6	25	2.5	489	103.039	GKS07-4M □□□080C32	676
	13	1.0	15	1.0	22	1.0	537	113.205	GKS06-4M □□□080C32	676
	13	1.3	16	1.3	24	1.2	506	104.967	GKS06-3M □□□080C32	668
	13	1.3	15	1.3	22	1.3	546	113.082	GKS06-3M □□□080C32	668

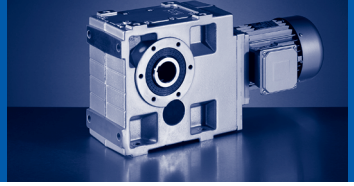

50 Hz: P_N=0.75 kW
60 Hz: P_N=0.92 kW
87 Hz: P_N=1.35 kW

n_N	1410 r/min		1710 r/min		2520 r/min		M_2 [Nm]	i		
f_N	50 Hz		60 Hz		87 Hz					
P_N	0.75 kW		0.92 kW		1.35 kW					
	n_2 [r/min]	c	n_2 [r/min]	c	n_2 [r/min]	c				
	13	2.0	15	2.0	22	2.0	533	112.391	GKS07-4M □□□080C32	676
	13	2.5	15	2.5	22	2.5	542	112.338	GKS07-3M □□□080C32	668
	11	1.0	13	1.0	20	1.0	615	127.392	GKS06-3M □□□080C32	668
	11	1.1	14	1.1	20	1.1	603	127.059	GKS06-4M □□□080C32	676
	11	2.0	14	2.0	20	2.0	611	126.578	GKS07-3M □□□080C32	668
	11	2.2	14	2.2	20	2.2	599	126.222	GKS07-4M □□□080C32	676
	10	0.8	12	0.8	18	0.8	668	140.816	GKS06-4M □□□080C32	676
	10	1.6	12	1.6	18	1.6	653	137.748	GKS07-4M □□□080C32	676
	9.9	1.0	12	1.0	18	1.0	690	142.941	GKS06-3M □□□080C32	668
	9.1	0.9	11	0.9	16	0.9	738	155.647	GKS06-4M □□□080C32	676
	9.1	1.8	11	1.8	16	1.8	733	154.622	GKS07-4M □□□080C32	676
	8.8	0.8	11	0.8	16	0.8	777	161.029	GKS06-3M □□□080C32	668
	7.9	1.2	9.5	1.2	14	1.2	850	179.201	GKS07-4M □□□080C32	676
	7.6	1.5	9.3	1.5	14	1.5	891	184.600	GKS07-3M □□□080C32	668
	7	1.4	8.5	1.4	13	1.4	955	201.254	GKS07-4M □□□080C32	676
	6.8	1.2	8.2	1.2	12	1.2	1004	208.000	GKS07-3M □□□080C32	668
	6.3	1.0	7.7	1.0	11	1.0	1057	222.909	GKS07-4M □□□080C32	676
	6.3	1.2	7.6	1.2	11	1.2	1081	224.037	GKS07-3M □□□080C32	668
	5.7	1.1	6.9	1.1	10	1.1	1170	246.659	GKS07-4M □□□080C32	676
	5.6	1.0	6.8	1.0	10	1.0	1218	252.436	GKS07-3M □□□080C32	668
	5.2	0.8	6.3	0.8	9.2	0.8	1296	273.199	GKS07-4M □□□080C32	676
	5	1.0	6	1.0	8.9	1.0	1366	283.193	GKS07-3M □□□080C32	668
	4.4	0.9	5.3	0.9	7.9	0.9	1523	321.049	GKS07-4M □□□080C32	676
	4.4	2.0	5.3	2.0	7.8	2.0	1534	323.365	GKS09-4M □□□080C32	676
	3.9	1.8	4.7	1.8	6.9	1.8	1728	364.427	GKS09-4M □□□080C32	676
	3.5	1.6	4.3	1.6	6.3	1.6	1908	402.234	GKS09-4M □□□080C32	676
	3.1	1.4	3.8	1.4	5.6	1.4	2150	453.311	GKS09-4M □□□080C32	676
	2.7	1.2	3.3	1.2	4.8	1.2	2469	520.538	GKS09-4M □□□080C32	676
	2.4	1.1	2.9	1.1	4.3	1.1	2782	586.638	GKS09-4M □□□080C32	676
	2.2	1.0	2.7	1.0	4	1.0	2996	631.744	GKS09-4M □□□080C32	676
	2	0.9	2.4	0.9	3.5	0.9	3377	711.965	GKS09-4M □□□080C32	676
	1.7	1.5	2.1	1.5	3.1	1.5	3872	816.455	GKS11-4M □□□080C32	676
	1.5	1.4	1.9	1.4	2.7	1.4	4363	919.949	GKS11-4M □□□080C32	676
	1.4	1.3	1.7	1.3	2.5	1.3	4700	990.879	GKS11-4M □□□080C32	676
	1.3	1.2	1.5	1.2	2.3	1.2	5295	1116.484	GKS11-4M □□□080C32	676
	1.1	1.0	1.4	1.0	2	1.0	5940	1252.516	GKS11-4M □□□080C32	676
	1	0.9	1.2	0.9	1.8	0.9	6693	1411.286	GKS11-4M □□□080C32	676

50 Hz: P_N=1.1 kW
60 Hz: P_N=1.3 kW

n_N	2720 r/min		3320 r/min				M_2 [Nm]	i		
f_N	50 Hz		60 Hz							
P_N	1.1 kW		1.3 kW							
	n_2 [r/min]	c	n_2 [r/min]	c						
	531	3.5	648	3.3			19	5.123	GKS04-3M □□□080C31	668
	387	2.9	473	2.8			26	7.025	GKS04-3M □□□080C31	668
	333	3.5	407	3.3			30	8.167	GKS04-3M □□□080C31	668
	303	2.6	369	2.4			33	8.991	GKS04-3M □□□080C31	668
	277	2.4	338	2.3			36	9.836	GKS04-3M □□□080C31	668
	232	3.4	283	3.2			43	11.730	GKS04-3M □□□080C31	668
	208	2.8	254	2.6			48	13.067	GKS04-3M □□□080C31	668
	206	2.8	252	2.6			48	13.176	GKS05-3M □□□080C31	668
	190	2.6	232	2.4			53	14.333	GKS04-3M □□□080C31	668
	169	2.5	206	2.4			59	16.087	GKS04-3M □□□080C31	668
	152	2.1	185	1.9			66	17.920	GKS04-3M □□□080C31	668
	132	2.0	161	1.9			76	20.588	GKS04-3M □□□080C31	668
	121	1.8	147	1.7			83	22.522	GKS04-3M □□□080C31	668
	108	1.5	132	1.4			92	25.088	GKS04-3M □□□080C31	668
	95	1.4	116	1.3			105	28.727	GKS04-3M □□□080C31	668
	91	2.5	111	2.3			110	29.931	GKS05-3M □□□080C31	668
	85	1.2	104	1.1			117	32.000	GKS04-3M □□□080C31	668
	83	2.3	101	2.1			120	32.744	GKS05-3M □□□080C31	668
	77	1.2	94	1.1			129	35.191	GKS04-3M □□□080C31	668
	74	1.8	90	1.7			135	36.894	GKS05-3M □□□080C31	668
	69	1.0	85	0.9			144	39.200	GKS04-3M □□□080C31	668
	65	1.8	80	1.7			153	41.765	GKS05-3M □□□080C31	668
	62	1.1	75	1.0			162	44.240	GKS04-3M □□□080C31	668
	58	1.6	71	1.5			173	47.059	GKS05-3M □□□080C31	668
	53	0.9	65	0.9			187	50.943	GKS04-3M □□□080C31	668
	53	1.6	65	1.5			188	51.162	GKS05-3M □□□080C31	668
	48	0.8					209	56.976	GKS04-3M □□□080C31	668
	47	1.4	58	1.3			212	57.647	GKS05-3M □□□080C31	668
	47	3.1	57	2.9			212	57.882	GKS06-3M □□□080C31	668
	42	2.4	51	2.3			239	65.207	GKS06-3M □□□080C31	668
	41	1.3	50	1.2			244	66.592	GKS05-3M □□□080C31	668
	38	2.5	46	2.3			264	72.000	GKS06-3M □□□080C31	668
	36	1.1	44	1.0			275	75.033	GKS05-3M □□□080C31	668
	34	2.0	41	1.9			298	81.111	GKS06-3M □□□080C31	668
	33	1.0	40	1.0			304	82.833	GKS05-3M □□□080C31	668
	29	0.9	36	0.8			342	93.333	GKS05-3M □□□080C31	668
	29	1.9	36	1.8			342	93.176	GKS06-3M □□□080C31	668
	26	1.5	32	1.4			385	104.967	GKS06-3M □□□080C31	668
	26	1.7	32	1.6			374	103.721	GKS06-4M □□□080C31	676
	26	3.0	32	2.8			383	104.296	GKS07-3M □□□080C31	668
	26	3.2	32	3.0			372	103.039	GKS07-4M □□□080C31	676

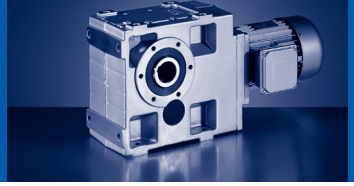

50 Hz: P_N=1.1 kW
60 Hz: P_N=1.3 kW

n_N	2720 r/min		3320 r/min				M_2 [Nm]	i		
f_N	50 Hz		60 Hz							
P_N	1.1 kW		1.3 kW							
	n_2 [r/min]	c	n_2 [r/min]	c						
	24	1.3	29	1.3			408	113.205	GKS06-4M □□□080C31	676
	24	1.7	29	1.6			415	113.082	GKS06-3M □□□080C31	668
	24	2.6	30	2.5			405	112.391	GKS07-4M □□□080C31	676
	24	3.2	30	3.1			412	112.338	GKS07-3M □□□080C31	668
	22	2.6	26	2.5			464	126.578	GKS07-3M □□□080C31	668
	22	2.9	26	2.8			455	126.222	GKS07-4M □□□080C31	676
	21	1.4	26	1.3			467	127.392	GKS06-3M □□□080C31	668
	21	1.5	26	1.5			458	127.059	GKS06-4M □□□080C31	676
	20	2.1	24	2.1			497	137.748	GKS07-4M □□□080C31	676
	19	1.1	24	1.0			508	140.816	GKS06-4M □□□080C31	676
	19	1.3	23	1.3			524	142.941	GKS06-3M □□□080C31	668
	18	1.2	21	1.2			561	155.647	GKS06-4M □□□080C31	676
	18	2.3	22	2.3			558	154.622	GKS07-4M □□□080C31	676
	17	1.1	21	1.0			591	161.029	GKS06-3M □□□080C31	668
	16	0.9	19	0.8			629	174.336	GKS06-4M □□□080C31	676
	15	1.6	19	1.6			646	179.201	GKS07-4M □□□080C31	676
	15	2.0	18	1.9			677	184.600	GKS07-3M □□□080C31	668
	14	1.0	18	1.0			697	190.080	GKS06-3M □□□080C31	668
	14	1.8	17	1.8			726	201.254	GKS07-4M □□□080C31	676
	13	0.8					786	214.133	GKS06-3M □□□080C31	668
	13	1.0	16	0.9			731	202.588	GKS06-4M □□□080C31	676
	13	1.6	16	1.5			763	208.000	GKS07-3M □□□080C31	668
	12	0.8	14	0.8			846	230.688	GKS06-3M □□□080C31	668
	12	1.3	15	1.3			804	222.909	GKS07-4M □□□080C31	676
	12	1.6	15	1.6			822	224.037	GKS07-3M □□□080C31	668
	11	1.3	13	1.3			926	252.436	GKS07-3M □□□080C31	668
	11	1.5	14	1.4			889	246.659	GKS07-4M □□□080C31	676
	10	1.1	12	1.0			985	273.199	GKS07-4M □□□080C31	676
	9.6	1.3	12	1.2			1039	283.193	GKS07-3M □□□080C31	668
	8.5	1.0	10	1.0			1171	319.091	GKS07-3M □□□080C31	668
	8.5	1.1	10	1.1			1158	321.049	GKS07-4M □□□080C31	676
	8.4	2.6	10	2.5			1166	323.365	GKS09-4M □□□080C31	676
	7.6	0.8					1294	358.829	GKS07-4M □□□080C31	676
	7.5	2.3	9.1	2.3			1314	364.427	GKS09-4M □□□080C31	676
	6.8	0.9	8.3	0.9			1440	399.353	GKS07-4M □□□080C31	676
	6.8	2.1	8.3	2.0			1450	402.234	GKS09-4M □□□080C31	676
	6	1.9	7.3	1.8			1635	453.311	GKS09-4M □□□080C31	676
	5.2	1.6	6.4	1.6			1877	520.538	GKS09-4M □□□080C31	676
	4.6	1.5	5.7	1.4			2115	586.638	GKS09-4M □□□080C31	676
	4.3	1.3	5.3	1.3			2278	631.744	GKS09-4M □□□080C31	676
	3.8	1.2	4.7	1.2			2567	711.965	GKS09-4M □□□080C31	676

50 Hz: P_N=1.1 kW
60 Hz: P_N=1.3 kW

n_N	2720 r/min		3320 r/min				M_2 [Nm]	i		
f_N	50 Hz		60 Hz							
P_N	1.1 kW		1.3 kW							
	n_2 [r/min]	c	n_2 [r/min]	c						
	3.3	1.0	4.1	1.0			2948	817.551	GKS09-4M □□□080C31	676
	3.3	2.0	4.1	2.0			2944	816.455	GKS11-4M □□□080C31	676
	3	0.9	3.6	0.9			3322	921.367	GKS09-4M □□□080C31	676
	3	1.8	3.6	1.8			3317	919.949	GKS11-4M □□□080C31	676
	2.8	1.7	3.4	1.6			3573	990.879	GKS11-4M □□□080C31	676
	2.7	0.9	3.4	0.8			3578	992.209	GKS09-4M □□□080C31	676
	2.4	1.5	3	1.5			4026	1116.484	GKS11-4M □□□080C31	676
	2.2	1.3	2.7	1.3			4516	1252.516	GKS11-4M □□□080C31	676
	1.9	1.2	2.4	1.2			5089	1411.286	GKS11-4M □□□080C31	676

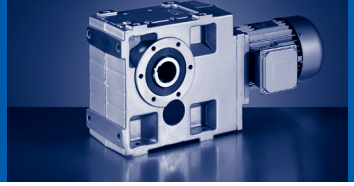

50 Hz: P_N=1.1 kW
60 Hz: P_N=1.3 kW
87 Hz: P_N=2.0 kW

n_N	1390 r/min		1690 r/min		2500 r/min		M_2 [Nm]	i		
f_N	50 Hz		60 Hz		87 Hz					
P_N	1.1 kW		1.3 kW		2.0 kW					
	n_2 [r/min]	c	n_2 [r/min]	c	n_2 [r/min]	c				
	271	2.2	330	2.1	488	1.9	37	5.123	GKS04-3M □□□080C42	668
	203	3.0	246	2.9	364	2.5	49	6.863	GKS05-3M □□□080C42	668
	198	1.8	241	1.8	356	1.6	50	7.025	GKS04-3M □□□080C42	668
	170	2.2	207	2.1	306	1.9	59	8.167	GKS04-3M □□□080C42	668
	155	1.6	188	1.5	278	1.3	65	8.991	GKS04-3M □□□080C42	668
	148	2.4	180	2.3	266	2.1	68	9.412	GKS05-3M □□□080C42	668
	141	1.5	172	1.5	254	1.3	71	9.836	GKS04-3M □□□080C42	668
	132	3.0	160	2.9	237	2.5	76	10.569	GKS05-3M □□□080C42	668
	119	2.1	144	2.1	213	1.8	84	11.730	GKS04-3M □□□080C42	668
	119	3.0	145	2.9	214	2.5	84	11.667	GKS05-3M □□□080C42	668
	106	1.8	129	1.7	191	1.5	94	13.067	GKS04-3M □□□080C42	668
	106	1.8	128	1.7	190	1.5	95	13.176	GKS05-3M □□□080C42	668
	97	1.6	118	1.5	174	1.3	103	14.333	GKS04-3M □□□080C42	668
	96	2.4	117	2.3	173	2.1	104	14.494	GKS05-3M □□□080C42	668
	87	2.4	106	2.3	156	2.1	115	16.000	GKS05-3M □□□080C42	668
	86	1.6	105	1.5	155	1.3	116	16.087	GKS04-3M □□□080C42	668
	82	2.6	99	2.5	147	2.2	122	17.054	GKS05-3M □□□080C42	668
	78	1.3	94	1.2	140	1.1	129	17.920	GKS04-3M □□□080C42	668
	72	2.2	88	2.1	130	1.8	138	19.216	GKS05-3M □□□080C42	668
	68	1.2	82	1.2	121	1.0	148	20.588	GKS04-3M □□□080C42	668
	62	1.1	75	1.1	111	1.0	162	22.522	GKS04-3M □□□080C42	668
	59	2.0	72	1.9	107	1.7	168	23.388	GKS05-3M □□□080C42	668
	55	0.9	67	0.9			180	25.088	GKS04-3M □□□080C42	668
	53	1.6	64	1.5	95	1.3	189	26.353	GKS05-3M □□□080C42	668
	48	0.9	59	0.9			206	28.727	GKS04-3M □□□080C42	668
	46	1.5	57	1.5	84	1.3	215	29.931	GKS05-3M □□□080C42	668
	43	1.4	52	1.4	76	1.2	235	32.744	GKS05-3M □□□080C42	668
	43	2.7	53	2.6	78	2.2	230	32.063	GKS06-3M □□□080C42	668
	38	1.1	46	1.1	68	1.0	265	36.894	GKS05-3M □□□080C42	668
	38	2.6	47	2.5	69	2.2	261	36.303	GKS06-3M □□□080C42	668
	33	1.1	41	1.1	60	0.9	300	41.765	GKS05-3M □□□080C42	668
	31	2.2	38	2.2	56	2.1	319	44.471	GKS06-3M □□□080C42	668
	30	0.9	36	0.9	53	0.9	338	47.059	GKS05-3M □□□080C42	668
	27	0.9	33	0.9	49	0.9	367	51.162	GKS05-3M □□□080C42	668
	26	1.8	32	1.8	47	1.8	381	53.074	GKS06-3M □□□080C42	668
	24	1.7	29	1.7	43	1.6	416	57.882	GKS06-3M □□□080C42	668
	24	3.2	29	3.2	44	3.0	413	57.501	GKS07-3M □□□080C42	668
	22	2.6	26	2.6	39	2.5	465	64.790	GKS07-3M □□□080C42	668
	21	1.3	26	1.3	38	1.3	468	65.207	GKS06-3M □□□080C42	668
	20	2.6	24	2.6	36	2.5	506	70.474	GKS07-3M □□□080C42	668
	19	1.4	24	1.4	35	1.3	517	72.000	GKS06-3M □□□080C42	668

50 Hz: P_N=1.1 kW
60 Hz: P_N=1.3 kW
87 Hz: P_N=2.0 kW

n_N	1390 r/min		1690 r/min		2500 r/min		M_2 [Nm]	i		
f_N	50 Hz		60 Hz		87 Hz					
P_N	1.1 kW		1.3 kW		2.0 kW					
	n_2 [r/min]	c	n_2 [r/min]	c	n_2 [r/min]	c				
	18	2.1	21	2.1	32	2.0	570	79.407	GKS07-3M □□□080C42	668
	17	1.1	21	1.1	31	1.0	582	81.111	GKS06-3M □□□080C42	668
	15	1.1	18	1.1	27	1.0	669	93.176	GKS06-3M □□□080C42	668
	15	2.0	18	2.0	27	1.9	664	92.563	GKS07-3M □□□080C42	668
	14	1.8	16	1.8	24	1.7	727	103.039	GKS07-4M □□□080C42	676
	13	0.8	16	0.8	24	0.8	754	104.967	GKS06-3M □□□080C42	668
	13	0.9	16	0.9	24	0.9	732	103.721	GKS06-4M □□□080C42	676
	13	1.6	16	1.6	24	1.6	749	104.296	GKS07-3M □□□080C42	668
	12	0.9	15	0.9	22	0.9	812	113.082	GKS06-3M □□□080C42	668
	12	1.3	15	1.3	22	1.3	793	112.391	GKS07-4M □□□080C42	676
	12	1.7	15	1.7	22	1.7	806	112.338	GKS07-3M □□□080C42	668
	11	1.3	13	1.3	20	1.3	909	126.578	GKS07-3M □□□080C42	668
	11	1.5	13	1.5	20	1.5	891	126.222	GKS07-4M □□□080C42	676
	10	1.1	12	1.1	18	1.1	972	137.748	GKS07-4M □□□080C42	676
	10	3.1	12	3.1	18	3.1	980	138.929	GKS09-4M □□□080C42	676
	9.9	1.3	12	1.3	18	1.3	1009	140.548	GKS07-3M □□□080C42	668
	9.2	2.8	11	2.8	17	2.8	1066	151.012	GKS09-4M □□□080C42	676
	9	1.2	11	1.2	16	1.2	1091	154.622	GKS07-4M □□□080C42	676
	8.8	1.1	11	1.1	16	1.1	1137	158.364	GKS07-3M □□□080C42	668
	8.2	2.5	9.9	2.5	15	2.5	1201	170.188	GKS09-4M □□□080C42	676
	7.8	0.8	9.4	0.8	14	0.8	1265	179.201	GKS07-4M □□□080C42	676
	7.5	1.0	9.2	1.0	14	1.0	1325	184.600	GKS07-3M □□□080C42	668
	6.9	0.9	8.4	0.9	12	0.9	1420	201.254	GKS07-4M □□□080C42	676
	6.8	2.1	8.3	2.1	12	2.1	1444	204.596	GKS09-4M □□□080C42	676
	6.7	0.8	8.1	0.8	12	0.8	1493	208.000	GKS07-3M □□□080C42	668
	6.2	0.8	7.5	0.8	11	0.8	1608	224.037	GKS07-3M □□□080C42	668
	6	1.9	7.3	1.9	11	1.9	1627	230.577	GKS09-4M □□□080C42	676
	5.6	1.7	6.8	1.7	10	1.7	1753	248.439	GKS09-4M □□□080C42	676
	5	1.6	6	1.6	8.9	1.6	1976	279.986	GKS09-4M □□□080C42	676
	4.3	1.3	5.2	1.3	7.7	1.3	2282	323.365	GKS09-4M □□□080C42	676
	4.3	2.6	5.2	2.6	7.7	2.6	2279	322.931	GKS11-4M □□□080C42	676
	3.8	1.2	4.6	1.2	6.9	1.2	2571	364.427	GKS09-4M □□□080C42	676
	3.8	2.4	4.6	2.4	6.9	2.4	2568	363.866	GKS11-4M □□□080C42	676
	3.5	1.1	4.2	1.1	6.2	1.1	2838	402.234	GKS09-4M □□□080C42	676
	3.5	2.1	4.3	2.1	6.3	2.1	2793	395.787	GKS11-4M □□□080C42	676
	3.1	1.0	3.7	1.0	5.5	1.0	3199	453.311	GKS09-4M □□□080C42	676
	3.1	1.9	3.8	1.9	5.6	1.9	3147	445.958	GKS11-4M □□□080C42	676
	2.7	0.8	3.3	0.8	4.8	0.8	3673	520.538	GKS09-4M □□□080C42	676
	2.7	1.7	3.3	1.7	4.9	1.7	3614	512.196	GKS11-4M □□□080C42	676
	2.4	1.5	2.9	1.5	4.3	1.5	4072	577.122	GKS11-4M □□□080C42	676
	2.2	1.4	2.7	1.4	4	1.4	4386	621.619	GKS11-4M □□□080C42	676

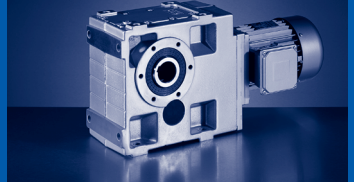

50 Hz: P_N=1.1 kW
60 Hz: P_N=1.3 kW
87 Hz: P_N=2.0 kW

n_N	1390 r/min		1690 r/min		2500 r/min		M_2 [Nm]	i		
f_N	50 Hz		60 Hz		87 Hz					
P_N	1.1 kW		1.3 kW		2.0 kW					
	n_2 [r/min]	c	n_2 [r/min]	c	n_2 [r/min]	c				
	2	1.2	2.4	1.2	3.6	1.2	4942	700.416	GKS11-4M □□□080C42	676
	1.7	1.0	2.1	1.0	3.1	1.0	5761	816.455	GKS11-4M □□□080C42	676
	1.5	0.9	1.8	0.9	2.7	0.9	6491	919.949	GKS11-4M □□□080C42	676
	1.4	0.9	1.7	0.9	2.5	0.9	6992	990.879	GKS11-4M □□□080C42	676

50 Hz: P_N=1.5 kW
60 Hz: P_N=1.8 kW

n_N	2710 r/min		3310 r/min				M_2 [Nm]	i		
f_N	50 Hz		60 Hz							
P_N	1.5 kW		1.8 kW							
	n_2 [r/min]	c	n_2 [r/min]	c						
	529	2.6	646	2.4			26	5.123	GKS04-3M □□□090C11	668
	386	2.2	471	2.0			35	7.025	GKS04-3M □□□090C11	668
	332	2.6	405	2.4			41	8.167	GKS04-3M □□□090C11	668
	301	1.9	368	1.8			45	8.991	GKS04-3M □□□090C11	668
	288	2.9	352	2.7			47	9.412	GKS05-3M □□□090C11	668
	276	1.8	337	1.7			49	9.836	GKS04-3M □□□090C11	668
	231	2.5	282	2.4			59	11.730	GKS04-3M □□□090C11	668
	207	2.1	253	1.9			66	13.067	GKS04-3M □□□090C11	668
	206	2.1	251	1.9			66	13.176	GKS05-3M □□□090C11	668
	189	1.9	231	1.8			72	14.333	GKS04-3M □□□090C11	668
	187	2.9	228	2.7			73	14.494	GKS05-3M □□□090C11	668
	169	1.8	206	1.7			81	16.087	GKS04-3M □□□090C11	668
	169	2.9	207	2.7			80	16.000	GKS05-3M □□□090C11	668
	159	3.0	194	2.8			86	17.054	GKS05-3M □□□090C11	668
	151	1.5	185	1.4			90	17.920	GKS04-3M □□□090C11	668
	141	2.5	172	2.4			97	19.216	GKS05-3M □□□090C11	668
	132	1.5	161	1.4			103	20.588	GKS04-3M □□□090C11	668
	120	1.3	147	1.2			113	22.522	GKS04-3M □□□090C11	668
	116	2.3	142	2.2			117	23.388	GKS05-3M □□□090C11	668
	108	1.1	132	1.0			126	25.088	GKS04-3M □□□090C11	668
	103	1.9	126	1.7			132	26.353	GKS05-3M □□□090C11	668
	94	1.0	115	1.0			144	28.727	GKS04-3M □□□090C11	668
	91	1.8	111	1.7			150	29.931	GKS05-3M □□□090C11	668
	85	0.9					161	32.000	GKS04-3M □□□090C11	668
	85	3.1	103	2.9			161	32.063	GKS06-3M □□□090C11	668
	83	1.7	101	1.6			164	32.744	GKS05-3M □□□090C11	668
	77	0.9					177	35.191	GKS04-3M □□□090C11	668
	75	3.1	91	2.9			182	36.303	GKS06-3M □□□090C11	668
	74	1.3	90	1.3			185	36.894	GKS05-3M □□□090C11	668
	65	1.3	79	1.2			210	41.765	GKS05-3M □□□090C11	668
	61	2.9	74	2.7			223	44.471	GKS06-3M □□□090C11	668
	58	1.2	70	1.1			236	47.059	GKS05-3M □□□090C11	668
	53	1.2	65	1.1			257	51.162	GKS05-3M □□□090C11	668
	51	2.4	62	2.3			267	53.074	GKS06-3M □□□090C11	668
	47	1.0	57	0.9			289	57.647	GKS05-3M □□□090C11	668
	47	2.2	57	2.1			291	57.882	GKS06-3M □□□090C11	668
	42	1.8	51	1.7			327	65.207	GKS06-3M □□□090C11	668
	41	0.9	50	0.9			334	66.592	GKS05-3M □□□090C11	668
	38	1.8	46	1.7			362	72.000	GKS06-3M □□□090C11	668
	34	2.8	42	2.6			399	79.407	GKS07-3M □□□090C11	668
	33	1.4	41	1.4			407	81.111	GKS06-3M □□□090C11	668

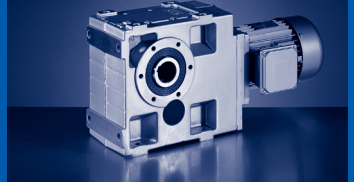

50 Hz: P_N=1.5 kW
60 Hz: P_N=1.8 kW

n_N	2710 r/min		3310 r/min				M_2 [Nm]	i		
f_N	50 Hz		60 Hz							
P_N	1.5 kW		1.8 kW							
	n_2 [r/min]	c	n_2 [r/min]	c						
	29	1.4	36	1.3			468	93.176	GKS06-3M □□□090C11	668
	29	2.7	36	2.5			465	92.563	GKS07-3M □□□090C11	668
	26	1.1	32	1.1			527	104.967	GKS06-3M □□□090C11	668
	26	1.3	32	1.2			512	103.721	GKS06-4M □□□090C11	676
	26	2.2	32	2.0			524	104.296	GKS07-3M □□□090C11	668
	26	2.4	32	2.2			509	103.039	GKS07-4M □□□090C11	676
	24	1.0	29	0.9			559	113.205	GKS06-4M □□□090C11	676
	24	1.2	29	1.2			568	113.082	GKS06-3M □□□090C11	668
	24	1.9	30	1.8			555	112.391	GKS07-4M □□□090C11	676
	24	2.4	30	2.3			564	112.338	GKS07-3M □□□090C11	668
	22	2.1	26	2.0			623	126.222	GKS07-4M □□□090C11	676
	21	1.0	26	1.0			640	127.392	GKS06-3M □□□090C11	668
	21	1.1	26	1.1			627	127.059	GKS06-4M □□□090C11	676
	21	1.9	26	1.9			636	126.578	GKS07-3M □□□090C11	668
	20	1.6	24	1.5			680	137.748	GKS07-4M □□□090C11	676
	19	1.9	24	1.8			706	140.548	GKS07-3M □□□090C11	668
	18	1.7	21	1.7			763	154.622	GKS07-4M □□□090C11	676
	17	0.9	21	0.9			768	155.647	GKS06-4M □□□090C11	676
	17	1.5	21	1.5			795	158.364	GKS07-3M □□□090C11	668
	15	1.2	19	1.2			884	179.201	GKS07-4M □□□090C11	676
	15	1.4	18	1.4			927	184.600	GKS07-3M □□□090C11	668
	14	1.3	16	1.3			993	201.254	GKS07-4M □□□090C11	676
	13	1.2	16	1.1			1044	208.000	GKS07-3M □□□090C11	668
	13	3.0	16	2.9			1010	204.596	GKS09-4M □□□090C11	676
	13	3.0	16	2.9			1030	205.111	GKS09-3M □□□090C11	668
	12	1.0	15	0.9			1100	222.909	GKS07-4M □□□090C11	676
	12	1.2	15	1.1			1125	224.037	GKS07-3M □□□090C11	668
	12	2.7	14	2.6			1138	230.577	GKS09-4M □□□090C11	676
	12	2.7	15	2.7			1109	220.882	GKS09-3M □□□090C11	668
	11	1.0	13	0.9			1267	252.436	GKS07-3M □□□090C11	668
	11	1.1	13	1.1			1217	246.659	GKS07-4M □□□090C11	676
	11	2.5	13	2.4			1226	248.439	GKS09-4M □□□090C11	676
	11	2.5	13	2.4			1250	248.930	GKS09-3M □□□090C11	668
	9.7	2.2	12	2.2			1382	279.986	GKS09-4M □□□090C11	676
	9.7	2.2	12	2.1			1402	279.205	GKS09-3M □□□090C11	668
	9.6	0.9	12	0.9			1422	283.193	GKS07-3M □□□090C11	668
	8.6	2.0	11	1.9			1580	314.659	GKS09-3M □□□090C11	668
	8.4	0.8	10	0.8			1584	321.049	GKS07-4M □□□090C11	676
	8.4	1.9	10	1.8			1596	323.365	GKS09-4M □□□090C11	676
	7.4	1.7	9.1	1.7			1799	364.427	GKS09-4M □□□090C11	676
	6.9	3.1	8.4	3.0			1953	395.787	GKS11-4M □□□090C11	676

50 Hz: P_N=1.5 kW
60 Hz: P_N=1.8 kW

n_N	2710 r/min		3310 r/min				M_2 [Nm]	i		
f_N	50 Hz		60 Hz							
P_N	1.5 kW		1.8 kW							
	n_2 [r/min]	c	n_2 [r/min]	c						
	6.7	1.5	8.2	1.5			1985	402.234	GKS09-4M □□□090C11	676
	6.1	2.7	7.4	2.7			2201	445.958	GKS11-4M □□□090C11	676
	6	1.4	7.3	1.3			2237	453.311	GKS09-4M □□□090C11	676
	5.3	2.4	6.5	2.3			2528	512.196	GKS11-4M □□□090C11	676
	5.2	1.2	6.4	1.1			2569	520.538	GKS09-4M □□□090C11	676
	4.7	2.1	5.7	2.1			2848	577.122	GKS11-4M □□□090C11	676
	4.6	1.1	5.6	1.0			2895	586.638	GKS09-4M □□□090C11	676
	4.4	2.0	5.3	1.9			3068	621.619	GKS11-4M □□□090C11	676
	4.3	1.0	5.2	0.9			3118	631.744	GKS09-4M □□□090C11	676
	3.9	1.8	4.7	1.7			3457	700.416	GKS11-4M □□□090C11	676
	3.8	0.9	4.7	0.9			3514	711.965	GKS09-4M □□□090C11	676
	3.4	2.9	4.1	2.8			3977	805.901	GKS14-4M □□□090C11	676
	3.3	1.5	4.1	1.4			4029	816.455	GKS11-4M □□□090C11	676
	3	1.3	3.6	1.3			4540	919.949	GKS11-4M □□□090C11	676
	3	2.6	3.7	2.5			4482	908.058	GKS14-4M □□□090C11	676
	2.8	2.4	3.4	2.3			4827	978.071	GKS14-4M □□□090C11	676
	2.7	1.2	3.3	1.2			4890	990.879	GKS11-4M □□□090C11	676
	2.5	2.1	3	2.1			5439	1102.052	GKS14-4M □□□090C11	676
	2.4	1.1	3	1.1			5510	1116.484	GKS11-4M □□□090C11	676
	2.2	1.0	2.6	0.9			6182	1252.516	GKS11-4M □□□090C11	676
	2.2	1.9	2.7	1.8			6102	1236.326	GKS14-4M □□□090C11	676
	2	1.7	2.4	1.6			6875	1393.043	GKS14-4M □□□090C11	676
	1.9	0.9	2.4	0.8			6965	1411.286	GKS11-4M □□□090C11	676

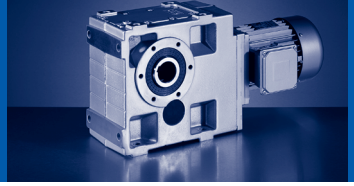

50 Hz: P_N=1.5 kW
60 Hz: P_N=1.8 kW
87 Hz: P_N=2.7 kW

n_N	1410 r/min		1710 r/min		2520 r/min		M_2 [Nm]	i		
f_N	50 Hz		60 Hz		87 Hz					
P_N	1.5 kW		1.8 kW		2.7 kW					
	n_2 [r/min]	c	n_2 [r/min]	c	n_2 [r/min]	c				
	272	1.6	331	1.6	489	1.4	50	5.123	GKS04-3M □□□090C32	668
	203	2.2	247	2.1	365	1.9	67	6.863	GKS05-3M □□□090C32	668
	199	1.4	241	1.3	357	1.1	69	7.025	GKS04-3M □□□090C32	668
	171	1.6	208	1.6	307	1.4	80	8.167	GKS04-3M □□□090C32	668
	155	1.2	189	1.1	279	1.0	88	8.991	GKS04-3M □□□090C32	668
	148	1.8	180	1.7	266	1.5	92	9.412	GKS05-3M □□□090C32	668
	142	1.1	172	1.1	255	0.9	96	9.836	GKS04-3M □□□090C32	668
	132	2.2	160	2.1	237	1.9	103	10.569	GKS05-3M □□□090C32	668
	123	3.0	149	2.9	220	2.5	111	11.382	GKS06-3M □□□090C32	668
	120	2.2	145	2.1	215	1.9	114	11.667	GKS05-3M □□□090C32	668
	119	1.6	145	1.5	214	1.3	114	11.730	GKS04-3M □□□090C32	668
	107	1.3	130	1.2	192	1.1	127	13.067	GKS04-3M □□□090C32	668
	106	1.3	129	1.2	190	1.1	129	13.176	GKS05-3M □□□090C32	668
	97	1.2	118	1.1	175	1.0	140	14.333	GKS04-3M □□□090C32	668
	96	1.8	117	1.7	173	1.5	141	14.494	GKS05-3M □□□090C32	668
	87	1.2	105	1.1	156	1.0	157	16.087	GKS04-3M □□□090C32	668
	87	1.8	106	1.7	157	1.5	156	16.000	GKS05-3M □□□090C32	668
	82	1.9	99	1.8	147	1.6	166	17.054	GKS05-3M □□□090C32	668
	78	1.0	95	0.9	140	0.8	175	17.920	GKS04-3M □□□090C32	668
	78	3.0	95	2.9	141	2.5	174	17.809	GKS06-3M □□□090C32	668
	73	1.6	88	1.5	130	1.3	187	19.216	GKS05-3M □□□090C32	668
	68	0.9	82	0.9			201	20.588	GKS04-3M □□□090C32	668
	62	0.8					220	22.522	GKS04-3M □□□090C32	668
	60	1.4	73	1.4	107	1.2	228	23.388	GKS05-3M □□□090C32	668
	54	2.7	65	2.6	96	2.3	254	26.017	GKS06-3M □□□090C32	668
	53	1.2	64	1.1	95	1.0	257	26.353	GKS05-3M □□□090C32	668
	49	2.5	60	2.4	88	2.1	278	28.461	GKS06-3M □□□090C32	668
	47	1.1	57	1.1	84	1.0	292	29.931	GKS05-3M □□□090C32	668
	44	2.0	53	1.9	78	1.6	313	32.063	GKS06-3M □□□090C32	668
	43	1.0	52	1.0	77	0.9	319	32.744	GKS05-3M □□□090C32	668
	38	0.8	46	0.8			360	36.894	GKS05-3M □□□090C32	668
	38	1.9	47	1.9	69	1.6	354	36.303	GKS06-3M □□□090C32	668
	33	0.8					407	41.765	GKS05-3M □□□090C32	668
	31	1.6	38	1.6	56	1.5	434	44.471	GKS06-3M □□□090C32	668
	26	1.3	32	1.3	47	1.3	518	53.074	GKS06-3M □□□090C32	668
	24	1.2	29	1.2	43	1.2	565	57.882	GKS06-3M □□□090C32	668
	24	2.3	30	2.3	44	2.2	561	57.501	GKS07-3M □□□090C32	668
	22	1.9	26	1.9	39	1.8	632	64.790	GKS07-3M □□□090C32	668
	21	1.0	26	1.0	38	0.9	636	65.207	GKS06-3M □□□090C32	668
	20	1.9	24	1.9	36	1.8	687	70.474	GKS07-3M □□□090C32	668
	19	1.0	24	1.0	35	1.0	702	72.000	GKS06-3M □□□090C32	668

50 Hz: P_N=1.5 kW
60 Hz: P_N=1.8 kW
87 Hz: P_N=2.7 kW

n_N	1410 r/min		1710 r/min		2520 r/min		M_2 [Nm]	i		
f_N	50 Hz		60 Hz		87 Hz					
P_N	1.5 kW		1.8 kW		2.7 kW					
	n_2 [r/min]	c	n_2 [r/min]	c	n_2 [r/min]	c				
	18	1.6	21	1.6	32	1.5	775	79.407	GKS07-3M □□□090C32	668
	15	1.5	18	1.5	27	1.4	903	92.563	GKS07-3M □□□090C32	668
	15	2.8	19	2.8	27	2.7	896	91.860	GKS09-3M □□□090C32	668
	14	1.3	17	1.3	24	1.3	988	103.039	GKS07-4M □□□090C32	676
	14	2.8	16	2.8	24	2.7	1010	103.524	GKS09-3M □□□090C32	668
	14	3.1	17	3.1	25	3.0	964	100.551	GKS09-4M □□□090C32	676
	13	1.2	16	1.2	24	1.1	1017	104.296	GKS07-3M □□□090C32	668
	13	2.5	15	2.5	23	2.5	1087	111.484	GKS09-3M □□□090C32	668
	12	1.0	15	1.0	22	1.0	1078	112.391	GKS07-4M □□□090C32	676
	12	1.2	15	1.2	22	1.2	1096	112.338	GKS07-3M □□□090C32	668
	12	2.8	15	2.8	22	2.8	1086	113.320	GKS09-4M □□□090C32	676
	11	1.0	13	1.0	20	1.0	1235	126.578	GKS07-3M □□□090C32	668
	11	1.1	13	1.1	20	1.1	1210	126.222	GKS07-4M □□□090C32	676
	11	2.5	14	2.5	20	2.5	1225	125.641	GKS09-3M □□□090C32	668
	11	2.6	14	2.6	20	2.6	1182	123.275	GKS09-4M □□□090C32	676
	10	2.3	12	2.3	18	2.3	1332	138.929	GKS09-4M □□□090C32	676
	9.9	1.0	12	1.0	18	1.0	1371	140.548	GKS07-3M □□□090C32	668
	9.9	1.9	12	1.9	18	1.9	1374	140.921	GKS09-3M □□□090C32	668
	9.2	2.1	11	2.1	17	2.1	1448	151.012	GKS09-4M □□□090C32	676
	9	0.9	11	0.9	16	0.9	1482	154.622	GKS07-4M □□□090C32	676
	8.8	1.9	11	1.9	16	1.9	1549	158.816	GKS09-3M □□□090C32	668
	8.2	1.9	10	1.9	15	1.9	1632	170.188	GKS09-4M □□□090C32	676
	7.7	1.7	9.3	1.7	14	1.7	1775	182.000	GKS09-3M □□□090C32	668
	6.8	1.5	8.3	1.5	12	1.5	2001	205.111	GKS09-3M □□□090C32	668
	6.8	1.6	8.3	1.6	12	1.6	1962	204.596	GKS09-4M □□□090C32	676
	6.3	1.4	7.7	1.4	11	1.4	2154	220.882	GKS09-3M □□□090C32	668
	6.1	1.4	7.4	1.4	11	1.4	2211	230.577	GKS09-4M □□□090C32	676
	5.6	1.3	6.8	1.3	10	1.3	2428	248.930	GKS09-3M □□□090C32	668
	5.6	1.3	6.8	1.3	10	1.3	2382	248.439	GKS09-4M □□□090C32	676
	5	1.1	6.1	1.1	9	1.1	2723	279.205	GKS09-3M □□□090C32	668
	5	1.1	6.1	1.1	9	1.1	2684	279.986	GKS09-4M □□□090C32	676
	4.4	1.0	5.4	1.0	8	1.0	3069	314.659	GKS09-3M □□□090C32	668
	4.3	1.0	5.2	1.0	7.8	1.0	3100	323.365	GKS09-4M □□□090C32	676
	4.3	1.9	5.3	1.9	7.8	1.9	3096	322.931	GKS11-4M □□□090C32	676
	3.8	0.9	4.7	0.9	6.9	0.9	3494	364.427	GKS09-4M □□□090C32	676
	3.8	1.7	4.7	1.7	6.9	1.7	3489	363.866	GKS11-4M □□□090C32	676
	3.5	1.6	4.3	1.6	6.3	1.6	3795	395.787	GKS11-4M □□□090C32	676
	3.1	1.4	3.8	1.4	5.6	1.4	4276	445.958	GKS11-4M □□□090C32	676
	2.7	1.2	3.3	1.2	4.9	1.2	4911	512.196	GKS11-4M □□□090C32	676
	2.4	1.1	2.9	1.1	4.3	1.1	5533	577.122	GKS11-4M □□□090C32	676
	2.2	1.0	2.7	1.0	4	1.0	5960	621.619	GKS11-4M □□□090C32	676

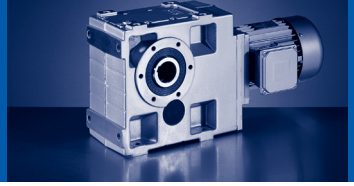

50 Hz: P_N=1.5 kW
60 Hz: P_N=1.8 kW
87 Hz: P_N=2.7 kW

n_N	1410 r/min		1710 r/min		2520 r/min		M_2 [Nm]	i		
f_N	50 Hz		60 Hz		87 Hz					
P_N	1.5 kW		1.8 kW		2.7 kW					
	n_2 [r/min]	c	n_2 [r/min]	c	n_2 [r/min]	c				
	2	0.9	2.4	0.9	3.6	0.9	6715	700.416	GKS11-4M □□□090C32	676
	1.7	1.5	2.1	1.5	3.1	1.5	7727	805.901	GKS14-4M □□□090C32	676
	1.5	1.3	1.9	1.3	2.8	1.3	8706	908.058	GKS14-4M □□□090C32	676
	1.4	1.2	1.7	1.2	2.6	1.2	9377	978.071	GKS14-4M □□□090C32	676
	1.3	1.1	1.5	1.1	2.3	1.1	10566	1102.052	GKS14-4M □□□090C32	676
	1.1	1.0	1.4	1.0	2	1.0	11853	1236.326	GKS14-4M □□□090C32	676
	1	0.9	1.2	0.9	1.8	0.9	13356	1393.043	GKS14-4M □□□090C32	676

50 Hz: P_N=2.2 kW
60 Hz: P_N=2.6 kW

n_N	2730 r/min		3330 r/min				M_2 [Nm]	i		
f_N	50 Hz		60 Hz							
P_N	2.2 kW		2.6 kW							
	n_2 [r/min]	c	n_2 [r/min]	c						
	533	1.8	650	1.7			37	5.123	GKS04-3M □□□090C31	668
	398	2.4	485	2.3			50	6.863	GKS05-3M □□□090C31	668
	389	1.5	474	1.4			51	7.025	GKS04-3M □□□090C31	668
	334	1.8	408	1.7			60	8.167	GKS04-3M □□□090C31	668
	304	1.3	370	1.2			66	8.991	GKS04-3M □□□090C31	668
	290	2.0	354	1.8			69	9.412	GKS05-3M □□□090C31	668
	278	1.2	339	1.1			72	9.836	GKS04-3M □□□090C31	668
	258	2.4	315	2.3			77	10.569	GKS05-3M □□□090C31	668
	234	2.4	285	2.3			85	11.667	GKS05-3M □□□090C31	668
	233	1.7	284	1.6			86	11.730	GKS04-3M □□□090C31	668
	209	1.4	255	1.3			96	13.067	GKS04-3M □□□090C31	668
	207	1.4	253	1.3			96	13.176	GKS05-3M □□□090C31	668
	191	1.3	232	1.2			105	14.333	GKS04-3M □□□090C31	668
	188	2.0	230	1.8			106	14.494	GKS05-3M □□□090C31	668
	171	2.0	208	1.8			117	16.000	GKS05-3M □□□090C31	668
	170	1.3	207	1.2			118	16.087	GKS04-3M □□□090C31	668
	160	2.1	195	1.9			125	17.054	GKS05-3M □□□090C31	668
	152	1.0	186	1.0			131	17.920	GKS04-3M □□□090C31	668
	142	1.7	173	1.6			141	19.216	GKS05-3M □□□090C31	668
	133	1.0	162	0.9			151	20.588	GKS04-3M □□□090C31	668
	121	0.9	148	0.9			165	22.522	GKS04-3M □□□090C31	668
	117	1.6	142	1.5			171	23.388	GKS05-3M □□□090C31	668
	105	2.9	128	2.7			190	26.017	GKS06-3M □□□090C31	668
	104	1.3	126	1.2			193	26.353	GKS05-3M □□□090C31	668
	96	2.7	117	2.5			208	28.461	GKS06-3M □□□090C31	668
	91	1.2	111	1.2			219	29.931	GKS05-3M □□□090C31	668
	85	2.1	104	2.0			234	32.063	GKS06-3M □□□090C31	668
	83	1.1	102	1.1			239	32.744	GKS05-3M □□□090C31	668
	75	2.1	92	2.0			265	36.303	GKS06-3M □□□090C31	668
	74	0.9	90	0.9			270	36.894	GKS05-3M □□□090C31	668
	65	0.9	80	0.8			305	41.765	GKS05-3M □□□090C31	668
	61	2.0	75	1.9			325	44.471	GKS06-3M □□□090C31	668
	58	0.8					344	47.059	GKS05-3M □□□090C31	668
	53	0.8					374	51.162	GKS05-3M □□□090C31	668
	51	1.7	63	1.6			388	53.074	GKS06-3M □□□090C31	668
	48	2.9	58	2.7			420	57.501	GKS07-3M □□□090C31	668
	47	1.5	58	1.4			423	57.882	GKS06-3M □□□090C31	668
	42	1.2	51	1.1			477	65.207	GKS06-3M □□□090C31	668
	42	2.4	51	2.2			474	64.790	GKS07-3M □□□090C31	668
	39	2.4	47	2.2			515	70.474	GKS07-3M □□□090C31	668
	38	1.2	46	1.2			526	72.000	GKS06-3M □□□090C31	668

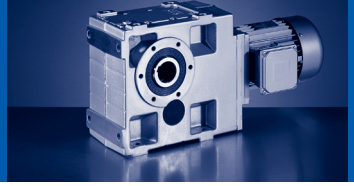

50 Hz: P_N=2.2 kW
60 Hz: P_N=2.6 kW

n_N	2730 r/min		3330 r/min				M_2 [Nm]	i		
f_N	50 Hz		60 Hz							
P_N	2.2 kW		2.6 kW							
	n_2 [r/min]	c	n_2 [r/min]	c						
	34	1.0	41	0.9			593	81.111	GKS06-3M □□□090C31	668
	34	1.9	42	1.8			580	79.407	GKS07-3M □□□090C31	668
	30	1.8	36	1.7			677	92.563	GKS07-3M □□□090C31	668
	29	1.0	36	0.9			681	93.176	GKS06-3M □□□090C31	668
	27	1.6	32	1.5			740	103.039	GKS07-4M □□□090C31	676
	26	0.9	32	0.8			745	103.721	GKS06-4M □□□090C31	676
	26	1.5	32	1.4			762	104.296	GKS07-3M □□□090C31	668
	24	0.9	29	0.8			827	113.082	GKS06-3M □□□090C31	668
	24	1.3	30	1.3			808	112.391	GKS07-4M □□□090C31	676
	24	1.6	30	1.6			821	112.338	GKS07-3M □□□090C31	668
	22	1.3	26	1.3			925	126.578	GKS07-3M □□□090C31	668
	22	1.4	26	1.4			907	126.222	GKS07-4M □□□090C31	676
	20	1.1	24	1.0			990	137.748	GKS07-4M □□□090C31	676
	20	3.0	24	2.9			998	138.929	GKS09-4M □□□090C31	676
	19	1.3	24	1.3			1027	140.548	GKS07-3M □□□090C31	668
	19	2.6	24	2.5			1030	140.921	GKS09-3M □□□090C31	668
	18	1.2	22	1.1			1111	154.622	GKS07-4M □□□090C31	676
	18	2.8	22	2.7			1085	151.012	GKS09-4M □□□090C31	676
	17	1.1	21	1.0			1158	158.364	GKS07-3M □□□090C31	668
	17	2.6	21	2.5			1161	158.816	GKS09-3M □□□090C31	668
	16	2.5	20	2.4			1223	170.188	GKS09-4M □□□090C31	676
	15	0.8					1288	179.201	GKS07-4M □□□090C31	676
	15	1.0	18	1.0			1349	184.600	GKS07-3M □□□090C31	668
	15	2.3	18	2.2			1330	182.000	GKS09-3M □□□090C31	668
	14	0.9	17	0.9			1446	201.254	GKS07-4M □□□090C31	676
	13	2.1	16	2.0			1470	204.596	GKS09-4M □□□090C31	676
	13	2.1	16	2.0			1499	205.111	GKS09-3M □□□090C31	668
	12	0.8					1638	224.037	GKS07-3M □□□090C31	668
	12	1.8	14	1.8			1657	230.577	GKS09-4M □□□090C31	676
	12	1.9	15	1.8			1615	220.882	GKS09-3M □□□090C31	668
	11	1.7	13	1.6			1785	248.439	GKS09-4M □□□090C31	676
	11	1.7	13	1.6			1820	248.930	GKS09-3M □□□090C31	668
	9.8	1.5	12	1.5			2012	279.986	GKS09-4M □□□090C31	676
	9.8	1.5	12	1.4			2041	279.205	GKS09-3M □□□090C31	668
	8.7	1.3	11	1.3			2300	314.659	GKS09-3M □□□090C31	668
	8.5	2.6	10	2.5			2320	322.931	GKS11-4M □□□090C31	676
	8.4	1.3	10	1.3			2324	323.365	GKS09-4M □□□090C31	676
	7.5	1.2	9.1	1.1			2619	364.427	GKS09-4M □□□090C31	676
	7.5	2.3	9.2	2.2			2615	363.866	GKS11-4M □□□090C31	676
	6.9	2.1	8.4	2.0			2844	395.787	GKS11-4M □□□090C31	676
	6.8	1.1	8.3	1.0			2890	402.234	GKS09-4M □□□090C31	676

50 Hz: P_N=2.2 kW
60 Hz: P_N=2.6 kW

n_N	2730 r/min		3330 r/min				M_2 [Nm]	i		
f_N	50 Hz		60 Hz							
P_N	2.2 kW		2.6 kW							
	n_2 [r/min]	c	n_2 [r/min]	c						
	6.1	1.9	7.5	1.8			3204	445.958	GKS11-4M □□□090C31	676
	6	0.9	7.4	0.9			3257	453.311	GKS09-4M □□□090C31	676
	5.3	1.6	6.5	1.6			3680	512.196	GKS11-4M □□□090C31	676
	5.2	0.8					3740	520.538	GKS09-4M □□□090C31	676
	4.7	1.5	5.8	1.4			4147	577.122	GKS11-4M □□□090C31	676
	4.4	1.3	5.4	1.3			4467	621.619	GKS11-4M □□□090C31	676
	3.9	1.2	4.8	1.2			5033	700.416	GKS11-4M □□□090C31	676
	3.4	2.0	4.1	1.9			5791	805.901	GKS14-4M □□□090C31	676
	3.3	1.0	4.1	1.0			5867	816.455	GKS11-4M □□□090C31	676
	3	0.9	3.6	0.9			6610	919.949	GKS11-4M □□□090C31	676
	3	1.8	3.7	1.7			6525	908.058	GKS14-4M □□□090C31	676
	2.8	0.8	3.4	0.8			7120	990.879	GKS11-4M □□□090C31	676
	2.8	1.6	3.4	1.6			7028	978.071	GKS14-4M □□□090C31	676
	2.5	1.5	3	1.4			7919	1102.052	GKS14-4M □□□090C31	676
	2.2	1.3	2.7	1.3			8883	1236.326	GKS14-4M □□□090C31	676
	2	1.2	2.4	1.1			10009	1393.043	GKS14-4M □□□090C31	676

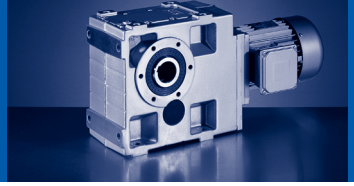

50 Hz: P_N=2.2 kW
60 Hz: P_N=2.6 kW
87 Hz: P_N=3.9 kW

n_N	1440 r/min		1740 r/min		2550 r/min		M_2 [Nm]	i		
f_N	50 Hz		60 Hz		87 Hz					
P_N	2.2 kW		2.6 kW		3.9 kW					
	n_2 [r/min]	c	n_2 [r/min]	c	n_2 [r/min]	c				
	222	2.9	268	2.8	393	2.5	90	6.485	GKS06-3M □□□100C12	668
	210	1.6	254	1.5	372	1.3	95	6.863	GKS05-3M □□□100C12	668
	157	2.9	189	2.8	277	2.5	127	9.196	GKS06-3M □□□100C12	668
	153	1.3	185	1.2	271	1.1	130	9.412	GKS05-3M □□□100C12	668
	142	2.9	172	2.8	251	2.5	141	10.147	GKS06-3M □□□100C12	668
	136	1.6	165	1.5	241	1.3	147	10.569	GKS05-3M □□□100C12	668
	127	2.1	153	2.0	224	1.8	158	11.382	GKS06-3M □□□100C12	668
	123	1.6	149	1.5	219	1.3	162	11.667	GKS05-3M □□□100C12	668
	114	2.4	138	2.3	202	2.0	175	12.612	GKS06-3M □□□100C12	668
	109	0.9	132	0.9			183	13.176	GKS05-3M □□□100C12	668
	99	1.3	120	1.2	176	1.1	201	14.494	GKS05-3M □□□100C12	668
	97	2.9	117	2.8	172	2.5	205	14.824	GKS06-3M □□□100C12	668
	90	1.3	109	1.2	159	1.1	222	16.000	GKS05-3M □□□100C12	668
	86	2.6	104	2.5	153	2.2	231	16.699	GKS06-3M □□□100C12	668
	84	1.3	102	1.3	150	1.1	236	17.054	GKS05-3M □□□100C12	668
	81	2.1	98	2.0	143	1.8	247	17.809	GKS06-3M □□□100C12	668
	75	1.1	91	1.1	133	0.9	266	19.216	GKS05-3M □□□100C12	668
	71	2.4	86	2.3	125	2.0	282	20.329	GKS06-3M □□□100C12	668
	63	1.9	76	1.8	111	1.6	317	22.902	GKS06-3M □□□100C12	668
	62	1.0	74	1.0	109	0.9	324	23.388	GKS05-3M □□□100C12	668
	55	0.8					365	26.353	GKS05-3M □□□100C12	668
	55	1.9	67	1.8	98	1.6	361	26.017	GKS06-3M □□□100C12	668
	51	1.7	61	1.7	90	1.5	394	28.461	GKS06-3M □□□100C12	668
	51	3.1	62	2.9	90	2.6	392	28.274	GKS07-3M □□□100C12	668
	45	1.4	54	1.3	80	1.2	444	32.063	GKS06-3M □□□100C12	668
	45	2.7	55	2.5	80	2.2	442	31.858	GKS07-3M □□□100C12	668
	40	1.4	48	1.3	70	1.1	503	36.303	GKS06-3M □□□100C12	668
	40	2.6	48	2.5	71	2.2	500	36.063	GKS07-3M □□□100C12	668
	35	1.2	42	1.1	62	1.0	575	41.472	GKS06-3M □□□100C12	668
	33	2.1	39	2.1	58	2.0	612	44.178	GKS07-3M □□□100C12	668
	32	1.1	39	1.1	57	1.1	616	44.471	GKS06-3M □□□100C12	668
	29	1.9	35	1.9	51	1.8	698	50.345	GKS07-3M □□□100C12	668
	27	0.9	33	0.9	48	0.9	736	53.074	GKS06-3M □□□100C12	668
	25	0.9	30	0.9	44	0.8	802	57.882	GKS06-3M □□□100C12	668
	25	1.6	30	1.6	44	1.6	797	57.501	GKS07-3M □□□100C12	668
	22	1.3	27	1.3	39	1.3	898	64.790	GKS07-3M □□□100C12	668
	20	1.4	25	1.4	36	1.3	977	70.474	GKS07-3M □□□100C12	668
	20	3.1	25	3.1	36	2.9	984	70.982	GKS09-3M □□□100C12	668
	18	1.1	22	1.1	32	1.0	1100	79.407	GKS07-3M □□□100C12	668
	18	2.8	22	2.8	32	2.6	1109	79.996	GKS09-3M □□□100C12	668
	16	1.0	19	1.0	28	1.0	1283	92.563	GKS07-3M □□□100C12	668

50 Hz: P_N=2.2 kW
60 Hz: P_N=2.6 kW
87 Hz: P_N=3.9 kW

n_N	1440 r/min		1740 r/min		2550 r/min		M_2 [Nm]	i		
f_N	50 Hz		60 Hz		87 Hz					
P_N	2.2 kW		2.6 kW		3.9 kW					
	n_2 [r/min]	c	n_2 [r/min]	c	n_2 [r/min]	c				
	16	2.4	19	2.4	28	2.3	1273	91.860	GKS09-3M □□□100C12	668
	14	0.8	17	0.8	24	0.8	1445	104.296	GKS07-3M □□□100C12	668
	14	0.9	17	0.9	25	0.9	1404	103.039	GKS07-4M □□□100C12	676
	14	2.2	17	2.2	25	2.0	1435	103.524	GKS09-3M □□□100C12	668
	14	2.2	17	2.2	25	2.1	1370	100.551	GKS09-4M □□□100C12	676
	13	0.9	16	0.9	23	0.9	1557	112.338	GKS07-3M □□□100C12	668
	13	1.9	15	1.9	23	1.9	1544	113.320	GKS09-4M □□□100C12	676
	13	2.0	16	2.0	23	2.0	1545	111.484	GKS09-3M □□□100C12	668
	13	2.9	16	2.9	23	2.9	1543	111.335	GKS11-3M □□□100C12	668
	12	1.8	14	1.8	20	1.8	1741	125.641	GKS09-3M □□□100C12	668
	12	1.8	14	1.8	21	1.8	1679	123.275	GKS09-4M □□□100C12	676
	12	2.9	14	2.9	20	2.9	1738	125.448	GKS11-3M □□□100C12	668
	10	1.5	12	1.5	18	1.5	1953	140.921	GKS09-3M □□□100C12	668
	10	1.6	13	1.6	18	1.6	1893	138.929	GKS09-4M □□□100C12	676
	10	2.3	12	2.3	18	2.3	1950	140.732	GKS11-3M □□□100C12	668
	10	3.1	12	3.1	18	3.1	1920	140.952	GKS11-4M □□□100C12	676
	9.5	1.5	12	1.5	17	1.5	2057	151.012	GKS09-4M □□□100C12	676
	9.4	2.8	11	2.8	17	2.8	2088	153.242	GKS11-4M □□□100C12	676
	9.1	1.4	11	1.4	16	1.4	2201	158.816	GKS09-3M □□□100C12	668
	9.1	2.3	11	2.3	16	2.3	2197	158.571	GKS11-3M □□□100C12	668
	8.5	1.3	10	1.3	15	1.3	2318	170.188	GKS09-4M □□□100C12	676
	8.3	2.5	10	2.5	15	2.5	2352	172.667	GKS11-4M □□□100C12	676
	7.9	1.2	9.6	1.2	14	1.2	2522	182.000	GKS09-3M □□□100C12	668
	7.7	2.3	9.3	2.3	14	2.3	2586	186.572	GKS11-3M □□□100C12	668
	7.1	2.2	8.6	2.2	13	2.2	2750	201.890	GKS11-4M □□□100C12	676
	7	1.1	8.5	1.1	12	1.1	2842	205.111	GKS09-3M □□□100C12	668
	7	1.1	8.5	1.1	13	1.1	2787	204.596	GKS09-4M □□□100C12	676
	6.9	2.0	8.3	2.0	12	2.0	2913	210.222	GKS11-3M □□□100C12	668
	6.5	1.0	7.9	1.0	12	1.0	3061	220.882	GKS09-3M □□□100C12	668
	6.4	1.9	7.7	1.9	11	1.9	3138	226.431	GKS11-3M □□□100C12	668
	6.3	1.0	7.6	1.0	11	1.0	3141	230.577	GKS09-4M □□□100C12	676
	6.3	1.9	7.7	1.9	11	1.9	3099	227.481	GKS11-4M □□□100C12	676
	5.8	0.9	7	0.9	10	0.9	3450	248.930	GKS09-3M □□□100C12	668
	5.8	0.9	7	0.9	10	0.9	3384	248.439	GKS09-4M □□□100C12	676
	5.8	1.8	7	1.8	10	1.8	3380	248.106	GKS11-4M □□□100C12	676
	5.6	1.7	6.8	1.7	10	1.7	3536	255.133	GKS11-3M □□□100C12	668
	5.2	1.6	6.2	1.6	9.1	1.6	3808	279.556	GKS11-4M □□□100C12	676
	5.1	0.8	6.2	0.8	9.1	0.8	3814	279.986	GKS09-4M □□□100C12	676
	5	1.5	6.1	1.5	8.9	1.5	3966	286.219	GKS11-3M □□□100C12	668
	4.5	1.3	5.4	1.3	7.9	1.3	4469	322.500	GKS11-3M □□□100C12	668
	4.5	1.4	5.4	1.4	7.9	1.4	4399	322.931	GKS11-4M □□□100C12	676

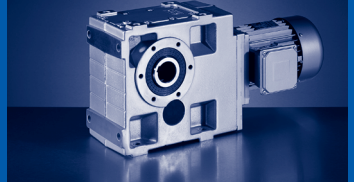

50 Hz: P_N=2.2 kW
60 Hz: P_N=2.6 kW
87 Hz: P_N=3.9 kW

n_N	1440 r/min		1740 r/min		2550 r/min		M_2 [Nm]	i		
f_N	50 Hz		60 Hz		87 Hz					
P_N	2.2 kW		2.6 kW		3.9 kW					
	n_2 [r/min]	c	n_2 [r/min]	c	n_2 [r/min]	c				
	4.5	2.6	5.4	2.6	7.9	2.6	4383	321.729	GKS14-4M □□□100C12	676
	4	1.2	4.8	1.2	7	1.2	4957	363.866	GKS11-4M □□□100C12	676
	4	2.3	4.8	2.3	7	2.3	4938	362.512	GKS14-4M □□□100C12	676
	3.7	2.2	4.5	2.2	6.5	2.2	5322	390.671	GKS14-4M □□□100C12	676
	3.6	1.1	4.4	1.1	6.4	1.1	5392	395.787	GKS11-4M □□□100C12	676
	3.3	1.9	4	1.9	5.8	1.9	5996	440.193	GKS14-4M □□□100C12	676
	3.2	1.0	3.9	1.0	5.7	1.0	6075	445.958	GKS11-4M □□□100C12	676
	2.8	0.9	3.4	0.9	5	0.9	6977	512.196	GKS11-4M □□□100C12	676
	2.8	1.6	3.4	1.6	5	1.6	6990	513.121	GKS14-4M □□□100C12	676
	2.5	1.5	3	1.5	4.4	1.5	7876	578.164	GKS14-4M □□□100C12	676
	2.3	1.4	2.8	1.4	4.1	1.4	8483	622.742	GKS14-4M □□□100C12	676
	2.1	1.2	2.5	1.2	3.6	1.2	9558	701.681	GKS14-4M □□□100C12	676
	1.8	1.1	2.2	1.1	3.2	1.1	10978	805.901	GKS14-4M □□□100C12	676
	1.6	0.9	1.9	0.9	2.8	0.9	12370	908.058	GKS14-4M □□□100C12	676
	1.5	0.9	1.8	0.9	2.6	0.9	13323	978.071	GKS14-4M □□□100C12	676

50 Hz: P_N=3.0 kW
60 Hz: P_N=3.6 kW

n_N	2890 r/min		3490 r/min				M_2 [Nm]	i		
f_N	50 Hz		60 Hz							
P_N	3.0 kW		3.6 kW							
	n_2 [r/min]	c	n_2 [r/min]	c						
	446	3.5	538	3.3			61	6.485	GKS06-3M □□□100C31	668
	421	1.8	509	1.7			65	6.863	GKS05-3M □□□100C31	668
	307	1.5	371	1.4			89	9.412	GKS05-3M □□□100C31	668
	274	1.8	330	1.7			100	10.569	GKS05-3M □□□100C31	668
	254	2.5	307	2.3			107	11.382	GKS06-3M □□□100C31	668
	248	1.8	299	1.7			110	11.667	GKS05-3M □□□100C31	668
	229	2.9	277	2.7			119	12.612	GKS06-3M □□□100C31	668
	219	1.1	265	1.0			124	13.176	GKS05-3M □□□100C31	668
	199	1.5	241	1.4			137	14.494	GKS05-3M □□□100C31	668
	181	1.5	218	1.4			151	16.000	GKS05-3M □□□100C31	668
	173	3.1	209	2.9			157	16.699	GKS06-3M □□□100C31	668
	170	1.6	205	1.5			161	17.054	GKS05-3M □□□100C31	668
	162	2.5	196	2.3			168	17.809	GKS06-3M □□□100C31	668
	150	1.3	182	1.2			181	19.216	GKS05-3M □□□100C31	668
	142	2.8	172	2.6			191	20.329	GKS06-3M □□□100C31	668
	126	2.3	152	2.1			216	22.902	GKS06-3M □□□100C31	668
	124	1.2	149	1.1			220	23.388	GKS05-3M □□□100C31	668
	111	2.2	134	2.1			245	26.017	GKS06-3M □□□100C31	668
	110	1.0	132	0.9			248	26.353	GKS05-3M □□□100C31	668
	102	2.1	123	1.9			268	28.461	GKS06-3M □□□100C31	668
	97	0.9	117	0.9			282	29.931	GKS05-3M □□□100C31	668
	91	3.1	110	3.0			300	31.858	GKS07-3M □□□100C31	668
	90	1.6	109	1.5			302	32.063	GKS06-3M □□□100C31	668
	88	0.9	107	0.8			308	32.744	GKS05-3M □□□100C31	668
	80	1.6	96	1.5			342	36.303	GKS06-3M □□□100C31	668
	80	3.1	97	2.9			340	36.063	GKS07-3M □□□100C31	668
	70	1.4	84	1.3			391	41.472	GKS06-3M □□□100C31	668
	65	1.5	79	1.4			419	44.471	GKS06-3M □□□100C31	668
	65	2.9	79	2.7			416	44.178	GKS07-3M □□□100C31	668
	57	2.5	69	2.4			474	50.345	GKS07-3M □□□100C31	668
	55	1.3	66	1.2			500	53.074	GKS06-3M □□□100C31	668
	50	1.2	60	1.1			545	57.882	GKS06-3M □□□100C31	668
	50	2.2	61	2.1			541	57.501	GKS07-3M □□□100C31	668
	45	1.8	54	1.7			610	64.790	GKS07-3M □□□100C31	668
	44	0.9	54	0.9			614	65.207	GKS06-3M □□□100C31	668
	41	1.8	50	1.7			664	70.474	GKS07-3M □□□100C31	668
	40	1.0	49	0.9			678	72.000	GKS06-3M □□□100C31	668
	36	1.5	44	1.4			748	79.407	GKS07-3M □□□100C31	668
	32	3.2	38	3.0			865	91.860	GKS09-3M □□□100C31	668
	31	1.4	38	1.3			872	92.563	GKS07-3M □□□100C31	668
	29	3.0	35	2.8			931	100.551	GKS09-4M □□□100C31	676

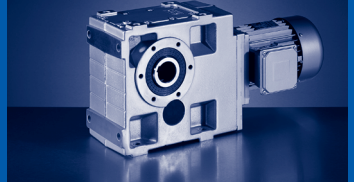

50 Hz: P_N=3.0 kW
60 Hz: P_N=3.6 kW

n_N	2890 r/min		3490 r/min				M_2 [Nm]	i		
f_N	50 Hz		60 Hz							
P_N	3.0 kW		3.6 kW							
	n_2 [r/min]	c	n_2 [r/min]	c						
	28	1.1	34	1.1			982	104.296	GKS07-3M □□□100C31	668
	28	1.2	34	1.2			954	103.039	GKS07-4M □□□100C31	676
	28	2.9	34	2.7			975	103.524	GKS09-3M □□□100C31	668
	26	1.0	31	1.0			1040	112.391	GKS07-4M □□□100C31	676
	26	1.3	31	1.2			1058	112.338	GKS07-3M □□□100C31	668
	26	2.9	31	2.7			1049	113.320	GKS09-4M □□□100C31	676
	26	2.9	31	2.8			1050	111.484	GKS09-3M □□□100C31	668
	23	1.0	28	1.0			1192	126.578	GKS07-3M □□□100C31	668
	23	1.1	28	1.1			1168	126.222	GKS07-4M □□□100C31	676
	23	2.6	28	2.5			1183	125.641	GKS09-3M □□□100C31	668
	23	2.7	28	2.5			1141	123.275	GKS09-4M □□□100C31	676
	21	0.8					1275	137.748	GKS07-4M □□□100C31	676
	21	1.0	25	1.0			1323	140.548	GKS07-3M □□□100C31	668
	21	2.2	25	2.1			1327	140.921	GKS09-3M □□□100C31	668
	21	2.4	25	2.2			1286	138.929	GKS09-4M □□□100C31	676
	19	0.9	23	0.9			1431	154.622	GKS07-4M □□□100C31	676
	19	2.2	23	2.1			1398	151.012	GKS09-4M □□□100C31	676
	18	0.8					1491	158.364	GKS07-3M □□□100C31	668
	18	2.1	22	2.0			1495	158.816	GKS09-3M □□□100C31	668
	17	1.9	21	1.8			1575	170.188	GKS09-4M □□□100C31	676
	16	1.8	19	1.7			1714	182.000	GKS09-3M □□□100C31	668
	14	1.6	17	1.5			1894	204.596	GKS09-4M □□□100C31	676
	14	1.6	17	1.5			1931	205.111	GKS09-3M □□□100C31	668
	14	3.0	17	2.8			1979	210.222	GKS11-3M □□□100C31	668
	14	3.2	17	3.0			1869	201.890	GKS11-4M □□□100C31	676
	13	1.4	15	1.4			2134	230.577	GKS09-4M □□□100C31	676
	13	1.5	16	1.4			2080	220.882	GKS09-3M □□□100C31	668
	13	2.8	15	2.7			2132	226.431	GKS11-3M □□□100C31	668
	13	2.9	15	2.7			2106	227.481	GKS11-4M □□□100C31	676
	12	1.3	14	1.3			2300	248.439	GKS09-4M □□□100C31	676
	12	1.3	14	1.3			2344	248.930	GKS09-3M □□□100C31	668
	12	2.6	14	2.5			2296	248.106	GKS11-4M □□□100C31	676
	11	2.5	14	2.3			2402	255.133	GKS11-3M □□□100C31	668
	10	1.2	13	1.1			2592	279.986	GKS09-4M □□□100C31	676
	10	1.2	13	1.1			2629	279.205	GKS09-3M □□□100C31	668
	10	2.2	12	2.1			2695	286.219	GKS11-3M □□□100C31	668
	10	2.3	13	2.2			2588	279.556	GKS11-4M □□□100C31	676
	9.2	1.0	11	1.0			2963	314.659	GKS09-3M □□□100C31	668
	9	1.9	11	1.8			3037	322.500	GKS11-3M □□□100C31	668
	9	2.0	11	1.9			2989	322.931	GKS11-4M □□□100C31	676
	8.9	1.0	11	1.0			2993	323.365	GKS09-4M □□□100C31	676

50 Hz: P_N=3.0 kW
60 Hz: P_N=3.6 kW

n_N	2890 r/min		3490 r/min				M_2 [Nm]	i		
f_N	50 Hz		60 Hz							
P_N	3.0 kW		3.6 kW							
	n_2 [r/min]	c	n_2 [r/min]	c						
	7.9	0.9	9.6	0.9			3373	364.427	GKS09-4M □□□100C31	676
	7.9	1.8	9.6	1.7			3368	363.866	GKS11-4M □□□100C31	676
	7.4	3.2	8.9	3.0			3616	390.671	GKS14-4M □□□100C31	676
	7.3	1.6	8.8	1.6			3663	395.787	GKS11-4M □□□100C31	676
	7.2	0.8					3723	402.234	GKS09-4M □□□100C31	676
	6.6	2.8	7.9	2.7			4074	440.193	GKS14-4M □□□100C31	676
	6.5	1.5	7.8	1.4			4128	445.958	GKS11-4M □□□100C31	676
	5.6	1.3	6.8	1.2			4741	512.196	GKS11-4M □□□100C31	676
	5.6	2.4	6.8	2.3			4749	513.121	GKS14-4M □□□100C31	676
	5	1.1	6.1	1.1			5342	577.122	GKS11-4M □□□100C31	676
	5	2.2	6	2.1			5351	578.164	GKS14-4M □□□100C31	676
	4.7	1.0	5.6	1.0			5754	621.619	GKS11-4M □□□100C31	676
	4.6	2.0	5.6	1.9			5764	622.742	GKS14-4M □□□100C31	676
	4.1	0.9	5	0.9			6483	700.416	GKS11-4M □□□100C31	676
	4.1	1.8	5	1.7			6495	701.681	GKS14-4M □□□100C31	676
	3.6	1.5	4.3	1.5			7459	805.901	GKS14-4M □□□100C31	676
	3.2	1.4	3.8	1.3			8405	908.058	GKS14-4M □□□100C31	676
	3	1.3	3.6	1.2			9053	978.071	GKS14-4M □□□100C31	676
	2.6	1.1	3.2	1.1			10200	1102.052	GKS14-4M □□□100C31	676
	2.3	1.0	2.8	1.0			11443	1236.326	GKS14-4M □□□100C31	676
	2.1	0.9	2.5	0.9			12894	1393.043	GKS14-4M □□□100C31	676

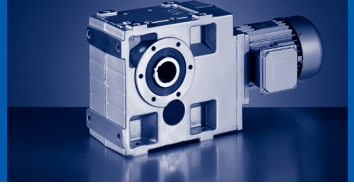

50 Hz: P_N=3.0 kW
60 Hz: P_N=3.6 kW
87 Hz: P_N=5.4 kW

n_N	1430 r/min		1730 r/min		2540 r/min		M_2 [Nm]	i		
f_N	50 Hz		60 Hz		87 Hz					
P_N	3.0 kW		3.6 kW		5.4 kW					
	n_2 [r/min]	c	n_2 [r/min]	c	n_2 [r/min]	c				
	221	2.1	267	2.0	392	1.8	123	6.485	GKS06-3M □□□100C32	668
	208	1.1	252	1.1	370	1.0	131	6.863	GKS05-3M □□□100C32	668
	156	2.1	188	2.0	276	1.8	175	9.196	GKS06-3M □□□100C32	668
	152	0.9	184	0.9			179	9.412	GKS05-3M □□□100C32	668
	141	2.1	171	2.0	250	1.8	193	10.147	GKS06-3M □□□100C32	668
	135	1.1	164	1.1	240	1.0	201	10.569	GKS05-3M □□□100C32	668
	126	1.5	152	1.5	223	1.3	217	11.382	GKS06-3M □□□100C32	668
	126	2.8	152	2.7	223	2.4	217	11.378	GKS07-3M □□□100C32	668
	123	1.1	148	1.1	218	1.0	222	11.667	GKS05-3M □□□100C32	668
	113	1.8	137	1.7	201	1.5	240	12.612	GKS06-3M □□□100C32	668
	99	0.9	119	0.9			276	14.494	GKS05-3M □□□100C32	668
	97	2.1	117	2.0	171	1.8	282	14.824	GKS06-3M □□□100C32	668
	89	0.9	108	0.9			305	16.000	GKS05-3M □□□100C32	668
	86	1.9	104	1.8	152	1.6	318	16.699	GKS06-3M □□□100C32	668
	84	1.0	101	0.9	149	0.8	325	17.054	GKS05-3M □□□100C32	668
	83	3.0	100	2.9	147	2.6	329	17.270	GKS07-3M □□□100C32	668
	80	1.5	97	1.5	143	1.3	339	17.809	GKS06-3M □□□100C32	668
	74	0.8					366	19.216	GKS05-3M □□□100C32	668
	70	1.7	85	1.6	125	1.4	387	20.329	GKS06-3M □□□100C32	668
	62	1.4	76	1.3	111	1.2	436	22.902	GKS06-3M □□□100C32	668
	57	2.5	69	2.3	101	2.1	480	25.244	GKS07-3M □□□100C32	668
	55	1.4	67	1.3	98	1.2	495	26.017	GKS06-3M □□□100C32	668
	51	2.2	61	2.1	90	1.9	538	28.274	GKS07-3M □□□100C32	668
	50	1.3	61	1.2	89	1.1	542	28.461	GKS06-3M □□□100C32	668
	45	1.0	54	1.0	79	0.8	610	32.063	GKS06-3M □□□100C32	668
	45	1.9	54	1.8	80	1.6	606	31.858	GKS07-3M □□□100C32	668
	40	1.9	48	1.8	70	1.6	686	36.063	GKS07-3M □□□100C32	668
	39	1.0	48	1.0	70	0.8	691	36.303	GKS06-3M □□□100C32	668
	35	0.9	42	0.8			789	41.472	GKS06-3M □□□100C32	668
	32	0.8	39	0.8			846	44.471	GKS06-3M □□□100C32	668
	32	1.6	39	1.6	58	1.5	841	44.178	GKS07-3M □□□100C32	668
	28	1.4	34	1.4	51	1.3	958	50.345	GKS07-3M □□□100C32	668
	25	1.2	30	1.2	44	1.1	1094	57.501	GKS07-3M □□□100C32	668
	25	2.7	30	2.7	44	2.6	1112	58.456	GKS09-3M □□□100C32	668
	22	1.0	27	1.0	39	0.9	1233	64.790	GKS07-3M □□□100C32	668
	22	2.4	26	2.4	39	2.3	1254	65.879	GKS09-3M □□□100C32	668
	20	1.0	25	1.0	36	0.9	1341	70.474	GKS07-3M □□□100C32	668
	20	2.2	24	2.2	36	2.1	1351	70.982	GKS09-3M □□□100C32	668
	18	2.0	22	2.0	32	1.9	1522	79.996	GKS09-3M □□□100C32	668
	16	1.7	19	1.7	28	1.7	1748	91.860	GKS09-3M □□□100C32	668
	16	2.5	19	2.5	28	2.4	1746	91.737	GKS11-3M □□□100C32	668

50 Hz: P_N=3.0 kW
60 Hz: P_N=3.6 kW
87 Hz: P_N=5.4 kW

n_N	1430 r/min		1730 r/min		2540 r/min		M_2 [Nm]	i		
f_N	50 Hz		60 Hz		87 Hz					
P_N	3.0 kW		3.6 kW		5.4 kW					
	n_2 [r/min]	c	n_2 [r/min]	c	n_2 [r/min]	c				
	14	1.6	17	1.6	25	1.5	1881	100.551	GKS09-4M □□□100C32	676
	14	1.6	17	1.6	25	1.5	1970	103.524	GKS09-3M □□□100C32	668
	14	2.5	17	2.5	25	2.4	1967	103.365	GKS11-3M □□□100C32	668
	14	3.0	17	3.0	25	2.8	1910	102.119	GKS11-4M □□□100C32	676
	13	1.4	15	1.4	22	1.4	2120	113.320	GKS09-4M □□□100C32	676
	13	1.4	16	1.4	23	1.4	2121	111.484	GKS09-3M □□□100C32	668
	13	2.1	16	2.1	23	2.1	2119	111.335	GKS11-3M □□□100C32	668
	12	1.3	14	1.3	21	1.3	2306	123.275	GKS09-4M □□□100C32	676
	12	2.7	15	2.7	22	2.7	2152	115.063	GKS11-4M □□□100C32	676
	11	1.3	14	1.3	20	1.3	2391	125.641	GKS09-3M □□□100C32	668
	11	2.1	14	2.1	20	2.1	2387	125.448	GKS11-3M □□□100C32	668
	11	2.5	14	2.5	20	2.5	2340	125.095	GKS11-4M □□□100C32	676
	10	1.1	12	1.1	18	1.1	2682	140.921	GKS09-3M □□□100C32	668
	10	1.2	13	1.2	18	1.2	2599	138.929	GKS09-4M □□□100C32	676
	10	1.7	12	1.7	18	1.7	2678	140.732	GKS11-3M □□□100C32	668
	10	2.3	12	2.3	18	2.3	2637	140.952	GKS11-4M □□□100C32	676
	9.5	1.1	12	1.1	17	1.1	2825	151.012	GKS09-4M □□□100C32	676
	9.3	2.0	11	2.0	17	2.0	2867	153.242	GKS11-4M □□□100C32	676
	9	1.0	11	1.0	16	1.0	3022	158.816	GKS09-3M □□□100C32	668
	9	1.7	11	1.7	16	1.7	3018	158.571	GKS11-3M □□□100C32	668
	8.4	1.0	10	1.0	15	1.0	3184	170.188	GKS09-4M □□□100C32	676
	8.3	1.8	10	1.8	15	1.8	3230	172.667	GKS11-4M □□□100C32	676
	7.9	0.9	9.5	0.9	14	0.9	3463	182.000	GKS09-3M □□□100C32	668
	7.7	1.7	9.3	1.7	14	1.7	3550	186.572	GKS11-3M □□□100C32	668
	7.1	1.6	8.6	1.6	13	1.6	3777	201.890	GKS11-4M □□□100C32	676
	6.8	1.5	8.2	1.5	12	1.5	4000	210.222	GKS11-3M □□□100C32	668
	6.3	1.4	7.6	1.4	11	1.4	4309	226.431	GKS11-3M □□□100C32	668
	6.3	1.4	7.6	1.4	11	1.4	4255	227.481	GKS11-4M □□□100C32	676
	5.8	1.3	7	1.3	10	1.3	4641	248.106	GKS11-4M □□□100C32	676
	5.6	1.2	6.8	1.2	10	1.2	4855	255.133	GKS11-3M □□□100C32	668
	5.1	1.2	6.2	1.2	9.1	1.2	5229	279.556	GKS11-4M □□□100C32	676
	5	1.1	6	1.1	8.9	1.1	5447	286.219	GKS11-3M □□□100C32	668
	4.4	1.0	5.4	1.0	7.9	1.0	6137	322.500	GKS11-3M □□□100C32	668
	4.4	1.0	5.4	1.0	7.9	1.0	6041	322.931	GKS11-4M □□□100C32	676
	4.4	1.9	5.4	1.9	7.9	1.9	6018	321.729	GKS14-4M □□□100C32	676
	3.9	0.9	4.8	0.9	7	0.9	6806	363.866	GKS11-4M □□□100C32	676
	3.9	1.7	4.8	1.7	7	1.7	6781	362.512	GKS14-4M □□□100C32	676
	3.7	1.6	4.4	1.6	6.5	1.6	7308	390.671	GKS14-4M □□□100C32	676
	3.6	0.8	4.4	0.8	6.4	0.8	7403	395.787	GKS11-4M □□□100C32	676
	3.3	1.4	3.9	1.4	5.8	1.4	8234	440.193	GKS14-4M □□□100C32	676
	2.8	1.2	3.4	1.2	5	1.2	9598	513.121	GKS14-4M □□□100C32	676

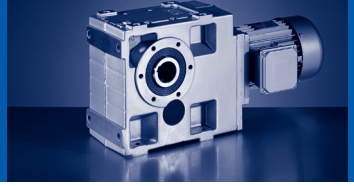

50 Hz: P_N=3.0 kW
60 Hz: P_N=3.6 kW
87 Hz: P_N=5.4 kW

n_N	1430 r/min		1730 r/min		2540 r/min		M_2 [Nm]	i		
f_N	50 Hz		60 Hz		87 Hz					
P_N	3.0 kW		3.6 kW		5.4 kW					
	n_2 [r/min]	c	n_2 [r/min]	c	n_2 [r/min]	c				
	2.5	1.1	3	1.1	4.4	1.1	10815	578.164	GKS14-4M □□□100C32	676
	2.3	1.0	2.8	1.0	4.1	1.0	11649	622.742	GKS14-4M □□□100C32	676
	2	0.9	2.5	0.9	3.6	0.9	13125	701.681	GKS14-4M □□□100C32	676

50 Hz: P_N=4.0 kW
60 Hz: P_N=4.8 kW

n_N	2840 r/min		3440 r/min				M_2 [Nm]	i		
f_N	50 Hz		60 Hz							
P_N	4.0 kW		4.8 kW							
	n_2 [r/min]	c	n_2 [r/min]	c						
	438	2.6	530	2.4			83	6.485	GKS06-3M □□□100C41	668
	414	1.4	501	1.3			88	6.863	GKS05-3M □□□100C41	668
	309	2.6	374	2.4			118	9.196	GKS06-3M □□□100C41	668
	302	1.1	366	1.0			120	9.412	GKS05-3M □□□100C41	668
	280	2.6	339	2.4			130	10.147	GKS06-3M □□□100C41	668
	269	1.4	326	1.3			135	10.569	GKS05-3M □□□100C41	668
	250	1.8	302	1.7			145	11.382	GKS06-3M □□□100C41	668
	243	1.4	295	1.3			149	11.667	GKS05-3M □□□100C41	668
	225	2.1	273	2.0			161	12.612	GKS06-3M □□□100C41	668
	196	1.1	237	1.0			185	14.494	GKS05-3M □□□100C41	668
	192	2.6	232	2.4			189	14.824	GKS06-3M □□□100C41	668
	178	1.1	215	1.0			204	16.000	GKS05-3M □□□100C41	668
	170	2.3	206	2.2			213	16.699	GKS06-3M □□□100C41	668
	167	1.2	202	1.1			218	17.054	GKS05-3M □□□100C41	668
	160	1.8	193	1.7			228	17.809	GKS06-3M □□□100C41	668
	148	1.0	179	0.9			246	19.216	GKS05-3M □□□100C41	668
	140	2.1	169	1.9			260	20.329	GKS06-3M □□□100C41	668
	124	1.7	150	1.6			293	22.902	GKS06-3M □□□100C41	668
	121	0.9	147	0.8			299	23.388	GKS05-3M □□□100C41	668
	113	3.0	136	2.8			323	25.244	GKS07-3M □□□100C41	668
	109	1.7	132	1.6			332	26.017	GKS06-3M □□□100C41	668
	100	1.5	121	1.4			364	28.461	GKS06-3M □□□100C41	668
	100	2.7	122	2.5			361	28.274	GKS07-3M □□□100C41	668
	89	1.2	107	1.1			410	32.063	GKS06-3M □□□100C41	668
	89	2.3	108	2.2			407	31.858	GKS07-3M □□□100C41	668
	79	2.3	95	2.1			461	36.063	GKS07-3M □□□100C41	668
	78	1.2	95	1.1			464	36.303	GKS06-3M □□□100C41	668
	69	1.1	83	1.0			530	41.472	GKS06-3M □□□100C41	668
	64	1.1	77	1.0			568	44.471	GKS06-3M □□□100C41	668
	64	2.1	78	2.0			564	44.178	GKS07-3M □□□100C41	668
	56	1.9	68	1.7			643	50.345	GKS07-3M □□□100C41	668
	54	0.9	65	0.9			678	53.074	GKS06-3M □□□100C41	668
	49	0.9	59	0.8			740	57.882	GKS06-3M □□□100C41	668
	49	1.6	60	1.5			735	57.501	GKS07-3M □□□100C41	668
	44	1.3	53	1.2			828	64.790	GKS07-3M □□□100C41	668
	40	1.4	49	1.3			900	70.474	GKS07-3M □□□100C41	668
	40	3.1	49	2.9			907	70.982	GKS09-3M □□□100C41	668
	36	1.1	43	1.0			1015	79.407	GKS07-3M □□□100C41	668
	36	2.8	43	2.6			1022	79.996	GKS09-3M □□□100C41	668
	31	1.0	37	1.0			1183	92.563	GKS07-3M □□□100C41	668
	31	2.4	37	2.2			1174	91.860	GKS09-3M □□□100C41	668

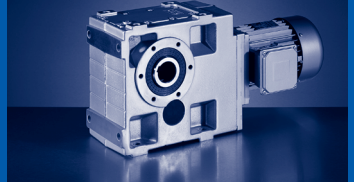

50 Hz: P_N=4.0 kW
60 Hz: P_N=4.8 kW

n_N	2840 r/min		3440 r/min				M_2 [Nm]	i		
f_N	50 Hz		60 Hz							
P_N	4.0 kW		4.8 kW							
	n_2 [r/min]	c	n_2 [r/min]	c						
	28	0.9	33	0.9			1294	103.039	GKS07-4M □□□100C41	676
	28	2.2	34	2.1			1263	100.551	GKS09-4M □□□100C41	676
	27	0.8					1332	104.296	GKS07-3M □□□100C41	668
	27	2.1	33	2.0			1323	103.524	GKS09-3M □□□100C41	668
	26	2.1	31	2.0			1424	111.484	GKS09-3M □□□100C41	668
	26	3.1	31	3.0			1422	111.335	GKS11-3M □□□100C41	668
	25	0.9	31	0.9			1435	112.338	GKS07-3M □□□100C41	668
	25	2.1	30	2.0			1423	113.320	GKS09-4M □□□100C41	676
	23	0.8					1585	126.222	GKS07-4M □□□100C41	676
	23	1.9	27	1.8			1605	125.641	GKS09-3M □□□100C41	668
	23	2.0	28	1.9			1548	123.275	GKS09-4M □□□100C41	676
	23	3.1	27	3.0			1603	125.448	GKS11-3M □□□100C41	668
	20	1.7	24	1.6			1800	140.921	GKS09-3M □□□100C41	668
	20	1.7	25	1.7			1745	138.929	GKS09-4M □□□100C41	676
	20	2.5	24	2.4			1798	140.732	GKS11-3M □□□100C41	668
	19	1.6	23	1.5			1896	151.012	GKS09-4M □□□100C41	676
	19	3.0	22	2.9			1924	153.242	GKS11-4M □□□100C41	676
	18	1.5	22	1.5			2029	158.816	GKS09-3M □□□100C41	668
	18	2.5	22	2.4			2026	158.571	GKS11-3M □□□100C41	668
	17	1.4	20	1.4			2137	170.188	GKS09-4M □□□100C41	676
	16	1.3	19	1.3			2325	182.000	GKS09-3M □□□100C41	668
	16	2.7	20	2.6			2168	172.667	GKS11-4M □□□100C41	676
	15	2.5	18	2.4			2384	186.572	GKS11-3M □□□100C41	668
	14	1.2	17	1.1			2620	205.111	GKS09-3M □□□100C41	668
	14	1.2	17	1.1			2569	204.596	GKS09-4M □□□100C41	676
	14	2.2	16	2.1			2686	210.222	GKS11-3M □□□100C41	668
	14	2.4	17	2.3			2535	201.890	GKS11-4M □□□100C41	676
	13	1.1	16	1.0			2822	220.882	GKS09-3M □□□100C41	668
	13	2.1	15	2.0			2893	226.431	GKS11-3M □□□100C41	668
	13	2.1	15	2.0			2857	227.481	GKS11-4M □□□100C41	676
	12	1.1	15	1.0			2896	230.577	GKS09-4M □□□100C41	676
	11	1.0	14	0.9			3180	248.930	GKS09-3M □□□100C41	668
	11	1.0	14	0.9			3120	248.439	GKS09-4M □□□100C41	676
	11	1.8	14	1.7			3259	255.133	GKS11-3M □□□100C41	668
	11	1.9	14	1.8			3116	248.106	GKS11-4M □□□100C41	676
	10	0.9	12	0.8			3567	279.205	GKS09-3M □□□100C41	668
	10	0.9	12	0.8			3516	279.986	GKS09-4M □□□100C41	676
	10	1.7	12	1.6			3511	279.556	GKS11-4M □□□100C41	676
	9.9	1.6	12	1.6			3657	286.219	GKS11-3M □□□100C41	668
	8.8	1.4	11	1.4			4120	322.500	GKS11-3M □□□100C41	668
	8.8	1.5	11	1.4			4055	322.931	GKS11-4M □□□100C41	676

50 Hz: P_N=4.0 kW
60 Hz: P_N=4.8 kW

n_N	2840 r/min		3440 r/min				M_2 [Nm]	i		
f_N	50 Hz		60 Hz							
P_N	4.0 kW		4.8 kW							
	n_2 [r/min]	c	n_2 [r/min]	c						
	8.8	2.8	11	2.7			4040	321.729	GKS14-4M □□□100C41	676
	7.8	1.3	9.5	1.3			4570	363.866	GKS11-4M □□□100C41	676
	7.8	2.5	9.5	2.4			4553	362.512	GKS14-4M □□□100C41	676
	7.3	2.3	8.8	2.2			4906	390.671	GKS14-4M □□□100C41	676
	7.2	1.2	8.7	1.2			4970	395.787	GKS11-4M □□□100C41	676
	6.5	2.1	7.8	2.0			5528	440.193	GKS14-4M □□□100C41	676
	6.4	1.1	7.7	1.0			5600	445.958	GKS11-4M □□□100C41	676
	5.5	0.9	6.7	0.9			6432	512.196	GKS11-4M □□□100C41	676
	5.5	1.8	6.7	1.7			6444	513.121	GKS14-4M □□□100C41	676
	4.9	0.8	6	0.8			7248	577.122	GKS11-4M □□□100C41	676
	4.9	1.6	6	1.5			7261	578.164	GKS14-4M □□□100C41	676
	4.6	1.5	5.5	1.4			7821	622.742	GKS14-4M □□□100C41	676
	4.1	1.3	4.9	1.3			8812	701.681	GKS14-4M □□□100C41	676
	3.5	1.1	4.3	1.1			10121	805.901	GKS14-4M □□□100C41	676
	3.1	1.0	3.8	1.0			11404	908.058	GKS14-4M □□□100C41	676
	2.9	0.9	3.5	0.9			12283	978.071	GKS14-4M □□□100C41	676
	2.6	0.8	3.1	0.8			13840	1102.052	GKS14-4M □□□100C41	676

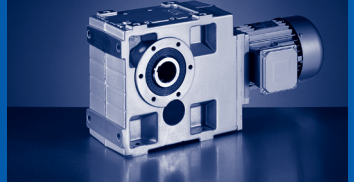

50 Hz: P_N=4.0 kW
60 Hz: P_N=4.8 kW
87 Hz: P_N=7.1 kW

n_N	1450 r/min		1750 r/min		2560 r/min		M_2 [Nm]	i		
f_N	50 Hz		60 Hz		87 Hz					
P_N	4.0 kW		4.8 kW		7.1 kW					
	n_2 [r/min]	c	n_2 [r/min]	c	n_2 [r/min]	c				
	244	3.2	294	3.0	430	2.6	149	5.955	GKS07-3M □□□112C22	668
	224	1.6	270	1.5	395	1.4	162	6.485	GKS06-3M □□□112C22	668
	176	2.6	212	2.5	310	2.2	207	8.254	GKS07-3M □□□112C22	668
	158	1.6	190	1.5	278	1.4	230	9.196	GKS06-3M □□□112C22	668
	158	3.2	191	3.0	279	2.6	230	9.171	GKS07-3M □□□112C22	668
	143	1.6	173	1.5	252	1.4	254	10.147	GKS06-3M □□□112C22	668
	143	3.2	173	3.0	253	2.6	253	10.124	GKS07-3M □□□112C22	668
	127	1.2	154	1.1	225	1.0	285	11.382	GKS06-3M □□□112C22	668
	127	2.2	154	2.1	225	1.8	285	11.378	GKS07-3M □□□112C22	668
	115	1.4	139	1.3	203	1.1	316	12.612	GKS06-3M □□□112C22	668
	114	2.6	138	2.5	201	2.2	318	12.711	GKS07-3M □□□112C22	668
	98	1.6	118	1.5	173	1.4	371	14.824	GKS06-3M □□□112C22	668
	98	2.8	118	2.7	173	2.4	370	14.798	GKS07-3M □□□112C22	668
	87	1.5	105	1.4	153	1.2	418	16.699	GKS06-3M □□□112C22	668
	87	2.6	105	2.4	154	2.2	417	16.674	GKS07-3M □□□112C22	668
	84	2.3	101	2.2	148	1.9	432	17.270	GKS07-3M □□□112C22	668
	81	1.2	98	1.1	144	1.0	446	17.809	GKS06-3M □□□112C22	668
	71	1.3	86	1.2	126	1.1	509	20.329	GKS06-3M □□□112C22	668
	71	2.2	85	2.1	125	1.8	513	20.511	GKS07-3M □□□112C22	668
	63	1.1	76	1.0	112	0.9	573	22.902	GKS06-3M □□□112C22	668
	63	2.0	76	1.9	111	1.7	578	23.111	GKS07-3M □□□112C22	668
	57	1.9	69	1.8	101	1.6	632	25.244	GKS07-3M □□□112C22	668
	56	1.0	67	1.0	98	0.9	651	26.017	GKS06-3M □□□112C22	668
	51	1.0	62	0.9	90	0.8	712	28.461	GKS06-3M □□□112C22	668
	51	1.7	62	1.6	91	1.4	708	28.274	GKS07-3M □□□112C22	668
	46	1.5	55	1.4	80	1.2	797	31.858	GKS07-3M □□□112C22	668
	40	1.4	49	1.4	71	1.2	902	36.063	GKS07-3M □□□112C22	668
	37	3.0	44	2.9	65	2.5	992	39.662	GKS09-3M □□□112C22	668
	35	1.3	43	1.2	63	1.1	1024	40.906	GKS07-3M □□□112C22	668
	34	2.8	41	2.8	59	2.7	1080	43.146	GKS09-3M □□□112C22	668
	33	1.2	40	1.2	58	1.1	1105	44.178	GKS07-3M □□□112C22	668
	30	2.5	36	2.5	53	2.4	1217	48.625	GKS09-3M □□□112C22	668
	29	1.0	35	1.0	51	1.0	1260	50.345	GKS07-3M □□□112C22	668
	25	0.9	30	0.9	45	0.9	1439	57.501	GKS07-3M □□□112C22	668
	25	2.1	30	2.1	44	2.0	1463	58.456	GKS09-3M □□□112C22	668
	25	3.2	30	3.2	44	3.1	1443	57.683	GKS11-3M □□□112C22	668
	22	1.9	27	1.9	39	1.8	1648	65.879	GKS09-3M □□□112C22	668
	22	3.2	27	3.2	39	3.1	1626	64.995	GKS11-3M □□□112C22	668
	21	2.7	25	2.7	36	2.6	1774	70.887	GKS11-3M □□□112C22	668
	20	1.7	25	1.7	36	1.6	1776	70.982	GKS09-3M □□□112C22	668
	18	1.5	22	1.5	32	1.5	2002	79.996	GKS09-3M □□□112C22	668

50 Hz: P_N=4.0 kW
60 Hz: P_N=4.8 kW
87 Hz: P_N=7.1 kW

n_N	1450 r/min		1750 r/min		2560 r/min		M_2 [Nm]	i		
f_N	50 Hz		60 Hz		87 Hz					
P_N	4.0 kW		4.8 kW		7.1 kW					
	n_2 [r/min]	c	n_2 [r/min]	c	n_2 [r/min]	c				
	18	2.7	22	2.7	32	2.6	1999	79.873	GKS11-3M □□□112C22	668
	16	1.3	19	1.3	28	1.3	2299	91.860	GKS09-3M □□□112C22	668
	16	2.2	19	2.2	28	2.1	2295	91.737	GKS11-3M □□□112C22	668
	16	2.7	19	2.7	28	2.6	2266	90.551	GKS14-3M □□□112C22	668
	14	1.2	17	1.2	25	1.1	2590	103.524	GKS09-3M □□□112C22	668
	14	1.2	17	1.2	26	1.2	2473	100.551	GKS09-4M □□□112C22	676
	14	2.2	17	2.2	25	2.1	2586	103.365	GKS11-3M □□□112C22	668
	14	2.3	17	2.3	25	2.1	2512	102.119	GKS11-4M □□□112C22	676
	14	2.7	17	2.7	25	2.6	2553	102.029	GKS14-3M □□□112C22	668
	13	1.1	16	1.1	23	1.1	2790	111.484	GKS09-3M □□□112C22	668
	13	1.1	15	1.1	23	1.1	2787	113.320	GKS09-4M □□□112C22	676
	13	1.8	16	1.8	23	1.8	2786	111.335	GKS11-3M □□□112C22	668
	13	2.1	15	2.1	22	2.1	2830	115.063	GKS11-4M □□□112C22	676
	13	2.3	16	2.3	23	2.2	2750	109.896	GKS14-3M □□□112C22	668
	12	1.0	14	1.0	20	1.0	3144	125.641	GKS09-3M □□□112C22	668
	12	1.0	14	1.0	21	1.0	3032	123.275	GKS09-4M □□□112C22	676
	12	1.8	14	1.8	20	1.8	3139	125.448	GKS11-3M □□□112C22	668
	12	1.9	14	1.9	21	1.9	3077	125.095	GKS11-4M □□□112C22	676
	12	2.3	14	2.3	21	2.3	3098	123.826	GKS14-3M □□□112C22	668
	10	0.9	13	0.9	18	0.9	3417	138.929	GKS09-4M □□□112C22	676
	10	1.5	12	1.5	18	1.5	3521	140.732	GKS11-3M □□□112C22	668
	10	1.7	12	1.7	18	1.7	3467	140.952	GKS11-4M □□□112C22	676
	10	1.8	13	1.8	18	1.8	3476	138.913	GKS14-3M □□□112C22	668
	9.6	0.8	12	0.8	17	0.8	3714	151.012	GKS09-4M □□□112C22	676
	9.5	1.5	11	1.5	17	1.5	3769	153.242	GKS11-4M □□□112C22	676
	9.3	1.8	11	1.8	16	1.8	3917	156.522	GKS14-3M □□□112C22	668
	9.2	3.0	11	3.0	16	3.0	3887	158.039	GKS14-4M □□□112C22	676
	9.1	1.5	11	1.5	16	1.5	3968	158.571	GKS11-3M □□□112C22	668
	8.4	1.4	10	1.4	15	1.4	4247	172.667	GKS11-4M □□□112C22	676
	8.1	2.6	9.8	2.6	14	2.6	4380	178.072	GKS14-4M □□□112C22	676
	7.8	1.3	9.4	1.3	14	1.3	4668	186.572	GKS11-3M □□□112C22	668
	7.8	2.5	9.4	2.5	14	2.5	4668	186.572	GKS14-3M □□□112C22	668
	7.5	2.4	9	2.4	13	2.4	4766	193.754	GKS14-4M □□□112C22	676
	7.2	1.2	8.7	1.2	13	1.2	4966	201.890	GKS11-4M □□□112C22	676
	6.9	1.1	8.3	1.1	12	1.1	5260	210.222	GKS11-3M □□□112C22	668
	6.9	2.2	8.3	2.2	12	2.2	5260	210.222	GKS14-3M □□□112C22	668
	6.6	2.1	8	2.1	12	2.1	5370	218.315	GKS14-4M □□□112C22	676
	6.4	1.1	7.7	1.1	11	1.1	5666	226.431	GKS11-3M □□□112C22	668
	6.4	1.1	7.7	1.1	11	1.1	5595	227.481	GKS11-4M □□□112C22	676
	6.4	2.1	7.7	2.1	11	2.1	5666	226.431	GKS14-3M □□□112C22	668
	6.1	2.0	7.4	2.0	11	2.0	5841	237.467	GKS14-4M □□□112C22	676

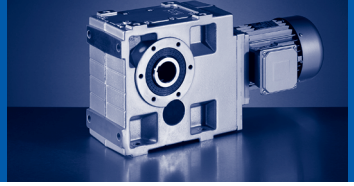

50 Hz: P_N=4.0 kW
60 Hz: P_N=4.8 kW
87 Hz: P_N=7.1 kW

n_N	1450 r/min		1750 r/min		2560 r/min		M_2 [Nm]	i		
f_N	50 Hz		60 Hz		87 Hz					
P_N	4.0 kW		4.8 kW		7.1 kW					
	n_2 [r/min]	c	n_2 [r/min]	c	n_2 [r/min]	c				
	5.8	1.0	7.1	1.0	10	1.0	6103	248.106	GKS11-4M □□□112C22	676
	5.7	0.9	6.9	0.9	10	0.9	6384	255.133	GKS11-3M □□□112C22	668
	5.7	1.8	6.9	1.8	10	1.8	6384	255.133	GKS14-3M □□□112C22	668
	5.4	1.8	6.5	1.8	9.6	1.8	6581	267.568	GKS14-4M □□□112C22	676
	5.2	0.9	6.3	0.9	9.2	0.9	6876	279.556	GKS11-4M □□□112C22	676
	5.1	0.8	6.1	0.8	8.9	0.8	7162	286.219	GKS11-3M □□□112C22	668
	5.1	1.6	6.1	1.6	8.9	1.6	7162	286.219	GKS14-3M □□□112C22	668
	4.5	1.4	5.4	1.4	7.9	1.4	8070	322.500	GKS14-3M □□□112C22	668
	4.5	1.5	5.4	1.5	8	1.5	7914	321.729	GKS14-4M □□□112C22	676
	4	1.3	4.8	1.3	7.1	1.3	8917	362.512	GKS14-4M □□□112C22	676
	3.7	1.2	4.5	1.2	6.6	1.2	9609	390.671	GKS14-4M □□□112C22	676
	3.3	1.1	4	1.1	5.8	1.1	10827	440.193	GKS14-4M □□□112C22	676
	2.8	0.9	3.4	0.9	5	0.9	12621	513.121	GKS14-4M □□□112C22	676
	2.5	0.8	3	0.8	4.4	0.8	14221	578.164	GKS14-4M □□□112C22	676

50 Hz: P_N=5.5 kW
60 Hz: P_N=6.6 kW

n_N	2900 r/min		3500 r/min				M_2 [Nm]	i		
f_N	50 Hz		60 Hz							
P_N	5.5 kW		6.6 kW							
	n_2 [r/min]	c	n_2 [r/min]	c						
	447	1.9	540	1.8			112	6.485	GKS06-3M □□□112C31	668
	351	3.1	424	2.9			142	8.254	GKS07-3M □□□112C31	668
	315	1.9	381	1.8			158	9.196	GKS06-3M □□□112C31	668
	286	1.9	345	1.8			175	10.147	GKS06-3M □□□112C31	668
	255	1.4	308	1.3			196	11.382	GKS06-3M □□□112C31	668
	255	2.5	308	2.4			196	11.378	GKS07-3M □□□112C31	668
	230	1.6	278	1.5			217	12.612	GKS06-3M □□□112C31	668
	228	3.1	275	2.9			219	12.711	GKS07-3M □□□112C31	668
	196	1.9	236	1.8			255	14.824	GKS06-3M □□□112C31	668
	174	1.7	210	1.6			287	16.699	GKS06-3M □□□112C31	668
	174	3.0	210	2.8			287	16.674	GKS07-3M □□□112C31	668
	168	2.7	203	2.5			297	17.270	GKS07-3M □□□112C31	668
	163	1.4	197	1.3			306	17.809	GKS06-3M □□□112C31	668
	143	1.5	172	1.4			350	20.329	GKS06-3M □□□112C31	668
	141	2.5	171	2.4			353	20.511	GKS07-3M □□□112C31	668
	127	1.2	153	1.2			394	22.902	GKS06-3M □□□112C31	668
	126	2.4	151	2.2			398	23.111	GKS07-3M □□□112C31	668
	115	2.2	139	2.0			434	25.244	GKS07-3M □□□112C31	668
	112	1.2	135	1.1			448	26.017	GKS06-3M □□□112C31	668
	103	2.0	124	1.9			486	28.274	GKS07-3M □□□112C31	668
	102	1.1	123	1.1			490	28.461	GKS06-3M □□□112C31	668
	91	1.7	110	1.6			548	31.858	GKS07-3M □□□112C31	668
	90	0.9	109	0.8			552	32.063	GKS06-3M □□□112C31	668
	80	0.9	96	0.8			625	36.303	GKS06-3M □□□112C31	668
	80	1.7	97	1.6			620	36.063	GKS07-3M □□□112C31	668
	71	1.5	86	1.4			704	40.906	GKS07-3M □□□112C31	668
	66	1.6	79	1.5			760	44.178	GKS07-3M □□□112C31	668
	65	0.8					765	44.471	GKS06-3M □□□112C31	668
	58	1.4	70	1.3			866	50.345	GKS07-3M □□□112C31	668
	50	1.2	61	1.1			989	57.501	GKS07-3M □□□112C31	668
	50	2.8	60	2.6			1006	58.456	GKS09-3M □□□112C31	668
	45	1.0	54	0.9			1115	64.790	GKS07-3M □□□112C31	668
	44	2.5	53	2.3			1133	65.879	GKS09-3M □□□112C31	668
	41	1.0	50	0.9			1212	70.474	GKS07-3M □□□112C31	668
	41	2.3	49	2.1			1221	70.982	GKS09-3M □□□112C31	668
	37	0.8					1366	79.407	GKS07-3M □□□112C31	668
	36	2.0	44	1.9			1376	79.996	GKS09-3M □□□112C31	668
	32	1.8	38	1.6			1580	91.860	GKS09-3M □□□112C31	668
	32	2.9	38	2.7			1578	91.737	GKS11-3M □□□112C31	668
	29	1.6	35	1.5			1700	100.551	GKS09-4M □□□112C31	676
	28	1.6	34	1.5			1781	103.524	GKS09-3M □□□112C31	668

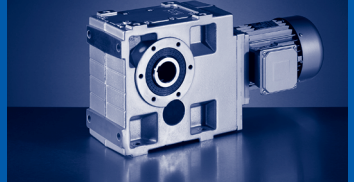

50 Hz: P_N=5.5 kW
60 Hz: P_N=6.6 kW

n_N	2900 r/min		3500 r/min				M_2 [Nm]	i		
f_N	50 Hz		60 Hz							
P_N	5.5 kW		6.6 kW							
	n_2 [r/min]	c	n_2 [r/min]	c						
	28	2.9	34	2.7			1778	103.365	GKS11-3M □□□112C31	668
	28	3.0	34	2.8			1727	102.119	GKS11-4M □□□112C31	676
	26	1.6	31	1.5			1918	111.484	GKS09-3M □□□112C31	668
	26	1.6	31	1.5			1916	113.320	GKS09-4M □□□112C31	676
	26	2.7	31	2.5			1915	111.335	GKS11-3M □□□112C31	668
	26	3.0	32	2.8			1891	109.896	GKS14-3M □□□112C31	668
	25	3.0	30	2.9			1946	115.063	GKS11-4M □□□112C31	676
	24	1.5	28	1.4			2085	123.275	GKS09-4M □□□112C31	676
	23	1.4	28	1.4			2161	125.641	GKS09-3M □□□112C31	668
	23	2.7	28	2.6			2115	125.095	GKS11-4M □□□112C31	676
	23	2.7	28	2.5			2158	125.448	GKS11-3M □□□112C31	668
	21	1.3	25	1.2			2349	138.929	GKS09-4M □□□112C31	676
	21	2.1	25	2.0			2421	140.732	GKS11-3M □□□112C31	668
	21	2.5	25	2.4			2384	140.952	GKS11-4M □□□112C31	676
	21	2.6	25	2.5			2390	138.913	GKS14-3M □□□112C31	668
	19	1.2	23	1.1			2554	151.012	GKS09-4M □□□112C31	676
	19	2.2	23	2.1			2591	153.242	GKS11-4M □□□112C31	676
	19	2.6	22	2.5			2693	156.522	GKS14-3M □□□112C31	668
	18	2.1	22	2.0			2728	158.571	GKS11-3M □□□112C31	668
	17	1.1	21	1.0			2878	170.188	GKS09-4M □□□112C31	676
	17	2.0	20	1.9			2920	172.667	GKS11-4M □□□112C31	676
	16	1.0	19	0.9			3131	182.000	GKS09-3M □□□112C31	668
	16	1.9	19	1.8			3210	186.572	GKS11-3M □□□112C31	668
	14	0.9	17	0.8			3529	205.111	GKS09-3M □□□112C31	668
	14	0.9	17	0.8			3460	204.596	GKS09-4M □□□112C31	676
	14	1.6	17	1.6			3616	210.222	GKS11-3M □□□112C31	668
	14	1.8	17	1.7			3414	201.890	GKS11-4M □□□112C31	676
	14	3.2	17	3.0			3616	210.222	GKS14-3M □□□112C31	668
	13	1.5	16	1.5			3895	226.431	GKS11-3M □□□112C31	668
	13	1.6	15	1.5			3847	227.481	GKS11-4M □□□112C31	676
	13	3.0	16	2.8			3895	226.431	GKS14-3M □□□112C31	668
	13	3.1	16	3.0			3692	218.315	GKS14-4M □□□112C31	676
	12	1.4	14	1.4			4196	248.106	GKS11-4M □□□112C31	676
	12	2.9	15	2.7			4016	237.467	GKS14-4M □□□112C31	676
	11	1.3	14	1.3			4389	255.133	GKS11-3M □□□112C31	668
	11	2.6	13	2.4			4525	267.568	GKS14-4M □□□112C31	676
	11	2.6	14	2.5			4389	255.133	GKS14-3M □□□112C31	668
	10	1.2	12	1.2			4924	286.219	GKS11-3M □□□112C31	668
	10	1.3	13	1.2			4727	279.556	GKS11-4M □□□112C31	676
	10	2.4	12	2.2			4924	286.219	GKS14-3M □□□112C31	668
	9	1.1	11	1.0			5461	322.931	GKS11-4M □□□112C31	676

50 Hz: P_N=5.5 kW
60 Hz: P_N=6.6 kW

n_N	2900 r/min		3500 r/min				M_2 [Nm]	i		
f_N	50 Hz		60 Hz							
P_N	5.5 kW		6.6 kW							
	n_2 [r/min]	c	n_2 [r/min]	c						
	9	1.1	11	1.0			5548	322.500	GKS11-3M □□□112C31	668
	9	2.1	11	2.0			5441	321.729	GKS14-4M □□□112C31	676
	9	2.1	11	2.0			5548	322.500	GKS14-3M □□□112C31	668
	8	1.0	9.6	0.9			6153	363.866	GKS11-4M □□□112C31	676
	8	1.9	9.7	1.8			6130	362.512	GKS14-4M □□□112C31	676
	7.4	1.7	9	1.7			6606	390.671	GKS14-4M □□□112C31	676
	7.3	0.9	8.8	0.9			6693	395.787	GKS11-4M □□□112C31	676
	6.6	1.6	8	1.5			7444	440.193	GKS14-4M □□□112C31	676
	5.7	1.3	6.8	1.3			8677	513.121	GKS14-4M □□□112C31	676
	5	1.2	6.1	1.1			9777	578.164	GKS14-4M □□□112C31	676
	4.7	1.1	5.6	1.0			10531	622.742	GKS14-4M □□□112C31	676
	4.1	1.0	5	0.9			11866	701.681	GKS14-4M □□□112C31	676
	3.6	0.8	4.3	0.8			13628	805.901	GKS14-4M □□□112C31	676

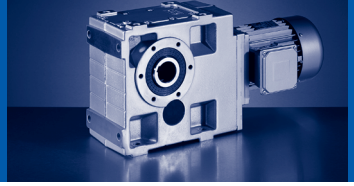

50 Hz: P_N=5.5 kW
60 Hz: P_N=6.6 kW
87 Hz: P_N=9.7 kW

n_N	1445 r/min		1745 r/min		2555 r/min		M_2 [Nm]	i		
f_N	50 Hz		60 Hz		87 Hz					
P_N	5.5 kW		6.6 kW		9.7 kW					
	n_2 [r/min]	c	n_2 [r/min]	c	n_2 [r/min]	c				
	243	2.3	293	2.2	429	1.9	206	5.955	GKS07-3M □□□112C32	668
	223	1.2	269	1.1	394	1.0	224	6.485	GKS06-3M □□□112C32	668
	175	1.9	211	1.8	310	1.6	285	8.254	GKS07-3M □□□112C32	668
	158	2.3	190	2.2	279	1.9	317	9.171	GKS07-3M □□□112C32	668
	157	1.2	190	1.1	278	1.0	318	9.196	GKS06-3M □□□112C32	668
	143	2.3	172	2.2	252	1.9	350	10.124	GKS07-3M □□□112C32	668
	142	1.2	172	1.1	252	1.0	350	10.147	GKS06-3M □□□112C32	668
	127	0.8	153	0.8			393	11.382	GKS06-3M □□□112C32	668
	127	1.6	153	1.5	225	1.3	393	11.378	GKS07-3M □□□112C32	668
	115	1.0	138	0.9	203	0.8	435	12.612	GKS06-3M □□□112C32	668
	114	1.9	137	1.8	201	1.6	439	12.711	GKS07-3M □□□112C32	668
	98	1.2	118	1.1	172	1.0	512	14.824	GKS06-3M □□□112C32	668
	98	2.0	118	1.9	173	1.7	511	14.798	GKS07-3M □□□112C32	668
	90	3.2	108	3.1	159	2.7	557	16.122	GKS09-3M □□□112C32	668
	87	1.1	105	1.0	153	0.9	577	16.699	GKS06-3M □□□112C32	668
	87	1.9	105	1.8	153	1.6	576	16.674	GKS07-3M □□□112C32	668
	84	1.7	101	1.6	148	1.4	596	17.270	GKS07-3M □□□112C32	668
	82	3.2	100	3.1	146	2.7	605	17.536	GKS09-3M □□□112C32	668
	81	0.8	98	0.8			615	17.809	GKS06-3M □□□112C32	668
	71	1.0	86	0.9			702	20.329	GKS06-3M □□□112C32	668
	70	1.6	85	1.5	125	1.3	708	20.511	GKS07-3M □□□112C32	668
	63	1.5	76	1.4	111	1.2	798	23.111	GKS07-3M □□□112C32	668
	57	1.4	69	1.3	101	1.1	872	25.244	GKS07-3M □□□112C32	668
	56	3.2	68	3.1	100	2.7	886	25.649	GKS09-3M □□□112C32	668
	51	1.2	62	1.2	90	1.0	976	28.274	GKS07-3M □□□112C32	668
	49	2.9	60	2.8	87	2.4	1009	29.228	GKS09-3M □□□112C32	668
	45	1.1	55	1.0	80	0.9	1100	31.858	GKS07-3M □□□112C32	668
	44	2.6	53	2.5	78	2.2	1137	32.940	GKS09-3M □□□112C32	668
	41	2.5	50	2.4	73	2.1	1215	35.193	GKS09-3M □□□112C32	668
	40	1.0	48	1.0	71	0.9	1245	36.063	GKS07-3M □□□112C32	668
	36	2.2	44	2.1	64	1.8	1369	39.662	GKS09-3M □□□112C32	668
	35	0.9	43	0.9			1412	40.906	GKS07-3M □□□112C32	668
	34	2.0	40	2.0	59	1.9	1490	43.146	GKS09-3M □□□112C32	668
	33	0.9	40	0.9	58	0.8	1525	44.178	GKS07-3M □□□112C32	668
	30	1.8	36	1.8	53	1.7	1679	48.625	GKS09-3M □□□112C32	668
	25	1.5	30	1.5	44	1.4	2018	58.456	GKS09-3M □□□112C32	668
	25	2.4	30	2.4	44	2.2	1992	57.683	GKS11-3M □□□112C32	668
	22	1.3	27	1.3	39	1.3	2274	65.879	GKS09-3M □□□112C32	668
	22	2.4	27	2.4	39	2.2	2244	64.995	GKS11-3M □□□112C32	668
	20	1.2	25	1.2	36	1.2	2451	70.982	GKS09-3M □□□112C32	668
	20	2.0	25	2.0	36	1.9	2447	70.887	GKS11-3M □□□112C32	668

50 Hz: P_N=5.5 kW
60 Hz: P_N=6.6 kW
87 Hz: P_N=9.7 kW

n_N	1445 r/min		1745 r/min		2555 r/min		M_2 [Nm]	i		
f_N	50 Hz		60 Hz		87 Hz					
P_N	5.5 kW		6.6 kW		9.7 kW					
	n_2 [r/min]	c	n_2 [r/min]	c	n_2 [r/min]	c				
	18	1.1	22	1.1	32	1.1	2762	79.996	GKS09-3M □□□112C32	668
	18	2.0	22	2.0	32	1.9	2758	79.873	GKS11-3M □□□112C32	668
	16	1.0	19	1.0	28	0.9	3171	91.860	GKS09-3M □□□112C32	668
	16	1.6	19	1.6	28	1.5	3167	91.737	GKS11-3M □□□112C32	668
	16	2.0	19	2.0	28	1.9	3126	90.551	GKS14-3M □□□112C32	668
	15	2.8	18	2.8	26	2.6	3308	97.467	GKS14-4M □□□112C32	676
	14	0.9	17	0.9	25	0.8	3413	100.551	GKS09-4M □□□112C32	676
	14	0.9	17	0.9	25	0.8	3574	103.524	GKS09-3M □□□112C32	668
	14	1.6	17	1.6	25	1.6	3466	102.119	GKS11-4M □□□112C32	676
	14	1.6	17	1.6	25	1.5	3569	103.365	GKS11-3M □□□112C32	668
	14	2.0	17	2.0	25	1.9	3523	102.029	GKS14-3M □□□112C32	668
	13	1.3	16	1.3	23	1.3	3844	111.335	GKS11-3M □□□112C32	668
	13	1.5	15	1.5	22	1.5	3905	115.063	GKS11-4M □□□112C32	676
	13	1.6	16	1.6	23	1.6	3794	109.896	GKS14-3M □□□112C32	668
	13	2.8	16	2.8	23	2.6	3727	109.822	GKS14-4M □□□112C32	676
	12	1.3	14	1.3	20	1.3	4331	125.448	GKS11-3M □□□112C32	668
	12	1.4	14	1.4	20	1.4	4245	125.095	GKS11-4M □□□112C32	676
	12	1.6	14	1.6	21	1.6	4275	123.826	GKS14-3M □□□112C32	668
	12	2.7	15	2.7	21	2.7	4055	119.493	GKS14-4M □□□112C32	676
	11	2.5	13	2.5	19	2.5	4569	134.640	GKS14-4M □□□112C32	676
	10	1.1	12	1.1	18	1.1	4859	140.732	GKS11-3M □□□112C32	668
	10	1.2	12	1.2	18	1.2	4784	140.952	GKS11-4M □□□112C32	676
	10	1.3	13	1.3	18	1.3	4796	138.913	GKS14-3M □□□112C32	668
	9.4	1.1	11	1.1	17	1.1	5201	153.242	GKS11-4M □□□112C32	676
	9.2	1.3	11	1.3	16	1.3	5404	156.522	GKS14-3M □□□112C32	668
	9.1	1.1	11	1.1	16	1.1	5475	158.571	GKS11-3M □□□112C32	668
	9.1	2.2	11	2.2	16	2.2	5364	158.039	GKS14-4M □□□112C32	676
	8.4	1.0	10	1.0	15	1.0	5860	172.667	GKS11-4M □□□112C32	676
	8.1	1.9	9.8	1.9	14	1.9	6043	178.072	GKS14-4M □□□112C32	676
	7.7	0.9	9.4	0.9	14	0.9	6441	186.572	GKS11-3M □□□112C32	668
	7.7	1.8	9.4	1.8	14	1.8	6441	186.572	GKS14-3M □□□112C32	668
	7.5	1.8	9	1.8	13	1.8	6576	193.754	GKS14-4M □□□112C32	676
	7.2	0.9	8.6	0.9	13	0.9	6852	201.890	GKS11-4M □□□112C32	676
	6.9	0.8	8.3	0.8	12	0.8	7258	210.222	GKS11-3M □□□112C32	668
	6.9	1.6	8.3	1.6	12	1.6	7258	210.222	GKS14-3M □□□112C32	668
	6.6	1.6	8	1.6	12	1.6	7409	218.315	GKS14-4M □□□112C32	676
	6.4	1.5	7.7	1.5	11	1.5	7817	226.431	GKS14-3M □□□112C32	668
	6.1	1.4	7.4	1.4	11	1.4	8059	237.467	GKS14-4M □□□112C32	676
	5.7	1.3	6.8	1.3	10	1.3	8808	255.133	GKS14-3M □□□112C32	668
	5.4	1.3	6.5	1.3	9.6	1.3	9081	267.568	GKS14-4M □□□112C32	676
	5.1	1.2	6.1	1.2	8.9	1.2	9882	286.219	GKS14-3M □□□112C32	668

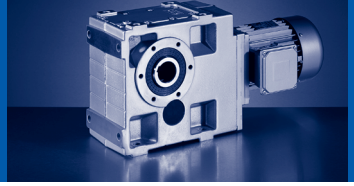

50 Hz: P_N=5.5 kW
60 Hz: P_N=6.6 kW
87 Hz: P_N=9.7 kW

n_N	1445 r/min		1745 r/min		2555 r/min		M_2 [Nm]	i		
f_N	50 Hz		60 Hz		87 Hz					
P_N	5.5 kW		6.6 kW		9.7 kW					
	n_2 [r/min]	c	n_2 [r/min]	c	n_2 [r/min]	c				
	4.5	1.0	5.4	1.0	7.9	1.0	11134	322.500	GKS14-3M □□□112C32	668
	4.5	1.1	5.4	1.1	7.9	1.1	10919	321.729	GKS14-4M □□□112C32	676
	4	0.9	4.8	0.9	7.1	0.9	12303	362.512	GKS14-4M □□□112C32	676
	3.7	0.9	4.5	0.9	6.5	0.9	13258	390.671	GKS14-4M □□□112C32	676

50 Hz: P_N=7.5 kW
60 Hz: P_N=9.0 kW

n_N	2890 r/min		3490 r/min				M_2 [Nm]	i		
f_N	50 Hz		60 Hz							
P_N	7.5 kW		9.0 kW							
	n_2 [r/min]	c	n_2 [r/min]	c						
	485	2.7	586	2.5			140	5.955	GKS07-3M □□□112C41	668
	446	1.4	538	1.3			153	6.485	GKS06-3M □□□112C41	668
	350	2.2	423	2.1			194	8.254	GKS07-3M □□□112C41	668
	315	2.7	381	2.5			216	9.171	GKS07-3M □□□112C41	668
	314	1.4	380	1.3			217	9.196	GKS06-3M □□□112C41	668
	286	2.7	345	2.5			238	10.124	GKS07-3M □□□112C41	668
	285	1.4	344	1.3			239	10.147	GKS06-3M □□□112C41	668
	254	1.0	307	0.9			268	11.382	GKS06-3M □□□112C41	668
	254	1.8	307	1.7			268	11.378	GKS07-3M □□□112C41	668
	229	1.2	277	1.1			297	12.612	GKS06-3M □□□112C41	668
	227	2.2	275	2.1			299	12.711	GKS07-3M □□□112C41	668
	195	1.4	235	1.3			349	14.824	GKS06-3M □□□112C41	668
	195	2.4	236	2.3			348	14.798	GKS07-3M □□□112C41	668
	173	1.2	209	1.2			393	16.699	GKS06-3M □□□112C41	668
	173	2.2	209	2.1			393	16.674	GKS07-3M □□□112C41	668
	167	2.0	202	1.9			407	17.270	GKS07-3M □□□112C41	668
	162	1.0	196	0.9			419	17.809	GKS06-3M □□□112C41	668
	142	1.1	172	1.1			479	20.329	GKS06-3M □□□112C41	668
	141	1.9	170	1.7			483	20.511	GKS07-3M □□□112C41	668
	126	0.9	152	0.9			539	22.902	GKS06-3M □□□112C41	668
	125	1.7	151	1.6			544	23.111	GKS07-3M □□□112C41	668
	115	1.6	138	1.5			594	25.244	GKS07-3M □□□112C41	668
	111	0.9	134	0.8			612	26.017	GKS06-3M □□□112C41	668
	102	0.8					670	28.461	GKS06-3M □□□112C41	668
	102	1.5	123	1.4			666	28.274	GKS07-3M □□□112C41	668
	91	1.3	110	1.2			750	31.858	GKS07-3M □□□112C41	668
	88	3.1	106	2.9			775	32.940	GKS09-3M □□□112C41	668
	82	2.9	99	2.8			828	35.193	GKS09-3M □□□112C41	668
	80	1.2	97	1.2			849	36.063	GKS07-3M □□□112C41	668
	73	2.6	88	2.4			934	39.662	GKS09-3M □□□112C41	668
	71	1.1	85	1.0			963	40.906	GKS07-3M □□□112C41	668
	67	2.7	81	2.6			1016	43.146	GKS09-3M □□□112C41	668
	65	1.1	79	1.1			1040	44.178	GKS07-3M □□□112C41	668
	59	2.4	72	2.3			1145	48.625	GKS09-3M □□□112C41	668
	57	1.0	69	0.9			1185	50.345	GKS07-3M □□□112C41	668
	50	0.9	61	0.8			1354	57.501	GKS07-3M □□□112C41	668
	50	3.2	61	3.0			1358	57.683	GKS11-3M □□□112C41	668
	49	2.0	60	1.9			1376	58.456	GKS09-3M □□□112C41	668
	45	3.2	54	3.0			1530	64.995	GKS11-3M □□□112C41	668
	44	1.8	53	1.7			1551	65.879	GKS09-3M □□□112C41	668
	41	1.7	49	1.6			1671	70.982	GKS09-3M □□□112C41	668

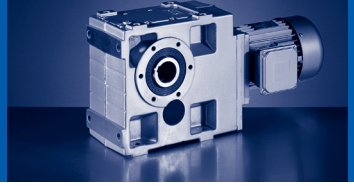

50 Hz: P_N=7.5 kW
60 Hz: P_N=9.0 kW

n_N	2890 r/min		3490 r/min				M_2 [Nm]	i		
f_N	50 Hz		60 Hz							
P_N	7.5 kW		9.0 kW							
	n_2 [r/min]	c	n_2 [r/min]	c						
	41	2.6	49	2.5			1669	70.887	GKS11-3M □□□112C41	668
	36	1.5	44	1.4			1883	79.996	GKS09-3M □□□112C41	668
	36	2.6	44	2.5			1880	79.873	GKS11-3M □□□112C41	668
	32	1.3	38	1.2			2162	91.860	GKS09-3M □□□112C41	668
	32	2.1	38	2.0			2159	91.737	GKS11-3M □□□112C41	668
	32	2.6	39	2.5			2132	90.551	GKS14-3M □□□112C41	668
	29	1.2	35	1.1			2327	100.551	GKS09-4M □□□112C41	676
	28	1.2	34	1.1			2437	103.524	GKS09-3M □□□112C41	668
	28	2.1	34	2.0			2433	103.365	GKS11-3M □□□112C41	668
	28	2.2	34	2.1			2363	102.119	GKS11-4M □□□112C41	676
	28	2.6	34	2.5			2402	102.029	GKS14-3M □□□112C41	668
	26	1.1	31	1.1			2622	113.320	GKS09-4M □□□112C41	676
	26	1.2	31	1.1			2624	111.484	GKS09-3M □□□112C41	668
	26	1.9	31	1.8			2621	111.335	GKS11-3M □□□112C41	668
	26	2.2	32	2.1			2587	109.896	GKS14-3M □□□112C41	668
	25	2.2	30	2.1			2663	115.063	GKS11-4M □□□112C41	676
	23	1.0	28	1.0			2958	125.641	GKS09-3M □□□112C41	668
	23	1.1	28	1.0			2853	123.275	GKS09-4M □□□112C41	676
	23	1.9	28	1.8			2953	125.448	GKS11-3M □□□112C41	668
	23	2.0	28	1.9			2895	125.095	GKS11-4M □□□112C41	676
	23	2.4	28	2.3			2915	123.826	GKS14-3M □□□112C41	668
	21	0.9	25	0.9			3215	138.929	GKS09-4M □□□112C41	676
	21	1.6	25	1.5			3313	140.732	GKS11-3M □□□112C41	668
	21	1.8	25	1.7			3262	140.952	GKS11-4M □□□112C41	676
	21	1.9	25	1.8			3270	138.913	GKS14-3M □□□112C41	668
	19	0.9	23	0.8			3494	151.012	GKS09-4M □□□112C41	676
	19	1.6	23	1.6			3546	153.242	GKS11-4M □□□112C41	676
	19	1.9	22	1.8			3684	156.522	GKS14-3M □□□112C41	668
	18	1.6	22	1.5			3733	158.571	GKS11-3M □□□112C41	668
	18	3.2	22	3.0			3657	158.039	GKS14-4M □□□112C41	676
	17	1.5	20	1.4			3995	172.667	GKS11-4M □□□112C41	676
	16	1.4	19	1.3			4392	186.572	GKS11-3M □□□112C41	668
	16	2.6	19	2.5			4392	186.572	GKS14-3M □□□112C41	668
	16	2.8	20	2.7			4121	178.072	GKS14-4M □□□112C41	676
	15	2.6	18	2.4			4483	193.754	GKS14-4M □□□112C41	676
	14	1.2	17	1.1			4949	210.222	GKS11-3M □□□112C41	668
	14	1.3	17	1.2			4672	201.890	GKS11-4M □□□112C41	676
	14	2.3	17	2.2			4949	210.222	GKS14-3M □□□112C41	668
	13	1.1	15	1.1			5330	226.431	GKS11-3M □□□112C41	668
	13	1.1	15	1.1			5264	227.481	GKS11-4M □□□112C41	676
	13	2.2	15	2.1			5330	226.431	GKS14-3M □□□112C41	668

50 Hz: P_N=7.5 kW
60 Hz: P_N=9.0 kW

n_N	2890 r/min		3490 r/min				M_2 [Nm]	i		
f_N	50 Hz		60 Hz							
P_N	7.5 kW		9.0 kW							
	n_2 [r/min]	c	n_2 [r/min]	c						
	13	2.3	16	2.2			5052	218.315	GKS14-4M □□□112C41	676
	12	1.0	14	1.0			5741	248.106	GKS11-4M □□□112C41	676
	12	2.1	15	2.0			5495	237.467	GKS14-4M □□□112C41	676
	11	1.0	14	0.9			6006	255.133	GKS11-3M □□□112C41	668
	11	1.9	14	1.8			6006	255.133	GKS14-3M □□□112C41	668
	11	1.9	13	1.8			6191	267.568	GKS14-4M □□□112C41	676
	10	0.9	12	0.8			6737	286.219	GKS11-3M □□□112C41	668
	10	0.9	13	0.9			6469	279.556	GKS11-4M □□□112C41	676
	10	1.7	12	1.6			6737	286.219	GKS14-3M □□□112C41	668
	9	1.5	11	1.5			7592	322.500	GKS14-3M □□□112C41	668
	9	1.5	11	1.5			7445	321.729	GKS14-4M □□□112C41	676
	8	1.4	9.6	1.3			8388	362.512	GKS14-4M □□□112C41	676
	7.4	1.3	8.9	1.2			9040	390.671	GKS14-4M □□□112C41	676
	6.6	1.1	7.9	1.1			10186	440.193	GKS14-4M □□□112C41	676
	5.6	1.0	6.8	0.9			11873	513.121	GKS14-4M □□□112C41	676
	5	0.9	6	0.8			13378	578.164	GKS14-4M □□□112C41	676

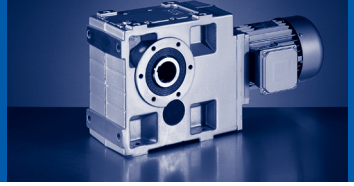

50 Hz: P_N=7.5 kW
60 Hz: P_N=9.0 kW
87 Hz: P_N=13.2 kW

n_N	1455 r/min		1755 r/min		2565 r/min		M_2 [Nm]	i		
f_N	50 Hz		60 Hz		87 Hz					
P_N	7.5 kW		9.0 kW		13.2 kW					
	n_2 [r/min]	c	n_2 [r/min]	c	n_2 [r/min]	c				
	244	1.7	295	1.6	431	1.4	278	5.955	GKS07-3M □□□132C22	668
	176	1.4	213	1.3	311	1.2	386	8.254	GKS07-3M □□□132C22	668
	159	1.7	191	1.6	280	1.4	429	9.171	GKS07-3M □□□132C22	668
	144	1.7	173	1.6	253	1.4	473	10.124	GKS07-3M □□□132C22	668
	128	1.2	154	1.1	225	1.0	532	11.378	GKS07-3M □□□132C22	668
	119	2.8	143	2.7	209	2.4	574	12.283	GKS09-3M □□□132C22	668
	115	1.4	138	1.3	202	1.2	594	12.711	GKS07-3M □□□132C22	668
	109	2.8	131	2.7	192	2.4	625	13.360	GKS09-3M □□□132C22	668
	98	1.5	119	1.4	173	1.3	692	14.798	GKS07-3M □□□132C22	668
	90	2.4	109	2.3	159	2.0	754	16.122	GKS09-3M □□□132C22	668
	87	1.4	105	1.3	154	1.2	780	16.674	GKS07-3M □□□132C22	668
	84	1.2	102	1.2	149	1.0	808	17.270	GKS07-3M □□□132C22	668
	83	2.4	100	2.3	146	2.0	820	17.536	GKS09-3M □□□132C22	668
	75	2.8	90	2.7	131	2.4	914	19.541	GKS09-3M □□□132C22	668
	71	1.2	86	1.1	125	1.0	959	20.511	GKS07-3M □□□132C22	668
	66	2.6	80	2.5	117	2.2	1030	22.022	GKS09-3M □□□132C22	668
	63	1.1	76	1.0	111	0.9	1081	23.111	GKS07-3M □□□132C22	668
	58	1.0	70	1.0	102	0.8	1180	25.244	GKS07-3M □□□132C22	668
	57	2.4	68	2.3	100	2.0	1199	25.649	GKS09-3M □□□132C22	668
	52	0.9	62	0.9			1322	28.274	GKS07-3M □□□132C22	668
	50	2.1	60	2.0	88	1.8	1367	29.228	GKS09-3M □□□132C22	668
	44	1.9	53	1.8	78	1.6	1540	32.940	GKS09-3M □□□132C22	668
	41	1.8	50	1.8	73	1.5	1646	35.193	GKS09-3M □□□132C22	668
	37	1.6	44	1.5	65	1.4	1854	39.662	GKS09-3M □□□132C22	668
	36	3.1	44	3.0	64	2.6	1883	40.272	GKS11-3M □□□132C22	668
	34	1.5	41	1.5	59	1.4	2017	43.146	GKS09-3M □□□132C22	668
	33	2.8	40	2.8	59	2.7	2047	43.783	GKS11-3M □□□132C22	668
	30	1.3	36	1.3	53	1.3	2274	48.625	GKS09-3M □□□132C22	668
	30	2.6	36	2.6	52	2.4	2307	49.333	GKS11-3M □□□132C22	668
	25	1.1	30	1.1	44	1.1	2733	58.456	GKS09-3M □□□132C22	668
	25	2.2	30	2.2	45	2.1	2697	57.683	GKS11-3M □□□132C22	668
	22	1.0	27	1.0	39	0.9	3080	65.879	GKS09-3M □□□132C22	668
	22	2.0	27	2.0	40	1.9	3039	64.995	GKS11-3M □□□132C22	668
	21	0.9	25	0.9	36	0.9	3319	70.982	GKS09-3M □□□132C22	668
	21	1.8	25	1.8	36	1.7	3314	70.887	GKS11-3M □□□132C22	668
	19	3.2	23	3.2	33	3.0	3632	77.681	GKS14-3M □□□132C22	668
	18	0.8	22	0.8			3740	79.996	GKS09-3M □□□132C22	668
	18	1.6	22	1.6	32	1.5	3735	79.873	GKS11-3M □□□132C22	668
	16	1.4	19	1.4	28	1.3	4289	91.737	GKS11-3M □□□132C22	668
	16	2.7	19	2.7	28	2.6	4234	90.551	GKS14-3M □□□132C22	668
	15	2.2	18	2.2	26	2.1	4480	97.467	GKS14-4M □□□132C22	676

50 Hz: P_N=7.5 kW
60 Hz: P_N=9.0 kW
87 Hz: P_N=13.2 kW

n_N	1455 r/min		1755 r/min		2565 r/min		M_2 [Nm]	i		
f_N	50 Hz		60 Hz		87 Hz					
P_N	7.5 kW		9.0 kW		13.2 kW					
	n_2 [r/min]	c	n_2 [r/min]	c	n_2 [r/min]	c				
	14	1.2	17	1.2	25	1.1	4693	102.119	GKS11-4M □□□132C22	676
	14	1.3	17	1.3	25	1.2	4833	103.365	GKS11-3M □□□132C22	668
	14	2.4	17	2.4	25	2.3	4770	102.029	GKS14-3M □□□132C22	668
	13	1.1	15	1.1	22	1.1	5288	115.063	GKS11-4M □□□132C22	676
	13	1.2	16	1.2	23	1.2	5206	111.335	GKS11-3M □□□132C22	668
	13	2.2	16	2.2	23	2.1	5047	109.822	GKS14-4M □□□132C22	676
	13	2.3	16	2.3	23	2.2	5138	109.896	GKS14-3M □□□132C22	668
	12	1.0	14	1.0	20	1.0	5865	125.448	GKS11-3M □□□132C22	668
	12	1.0	14	1.0	21	1.0	5749	125.095	GKS11-4M □□□132C22	676
	12	2.0	15	2.0	22	2.0	5492	119.493	GKS14-4M □□□132C22	676
	12	2.0	14	2.0	21	2.0	5790	123.826	GKS14-3M □□□132C22	668
	11	1.8	13	1.8	19	1.8	6188	134.640	GKS14-4M □□□132C22	676
	11	1.8	13	1.8	19	1.8	6495	138.913	GKS14-3M □□□132C22	668
	10	0.9	13	0.9	18	0.9	6478	140.952	GKS11-4M □□□132C22	676
	9.5	0.8	12	0.8	17	0.8	7043	153.242	GKS11-4M □□□132C22	676
	9.3	1.6	11	1.6	16	1.6	7318	156.522	GKS14-3M □□□132C22	668
	9.2	1.6	11	1.6	16	1.6	7264	158.039	GKS14-4M □□□132C22	676
	8.2	1.4	9.9	1.4	14	1.4	8184	178.072	GKS14-4M □□□132C22	676
	7.8	1.3	9.4	1.3	14	1.3	8723	186.572	GKS14-3M □□□132C22	668
	7.5	1.3	9.1	1.3	13	1.3	8905	193.754	GKS14-4M □□□132C22	676
	6.9	1.2	8.4	1.2	12	1.2	9829	210.222	GKS14-3M □□□132C22	668
	6.7	1.1	8	1.1	12	1.1	10034	218.315	GKS14-4M □□□132C22	676
	6.4	1.1	7.8	1.1	11	1.1	10587	226.431	GKS14-3M □□□132C22	668
	6.1	1.1	7.4	1.1	11	1.1	10914	237.467	GKS14-4M □□□132C22	676
	5.7	1.0	6.9	1.0	10	1.0	11929	255.133	GKS14-3M □□□132C22	668
	5.4	0.9	6.6	0.9	9.6	0.9	12298	267.568	GKS14-4M □□□132C22	676
	5.1	0.9	6.1	0.9	9	0.9	13382	286.219	GKS14-3M □□□132C22	668

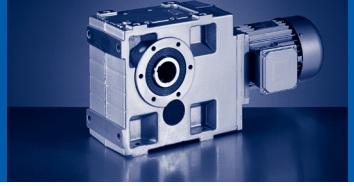

50 Hz: P_N=9.0 kW
60 Hz: P_N=11.0 kW

n_N	2890 r/min		3490 r/min				M_2 [Nm]	i		
f_N	50 Hz		60 Hz							
P_N	9.0 kW		11.0 kW							
	n_2 [r/min]	c	n_2 [r/min]	c						
	485	2.3	586	2.1			168	5.955	GKS07-3M □□□132C21	668
	350	1.9	423	1.8			233	8.254	GKS07-3M □□□132C21	668
	315	2.3	381	2.1			259	9.171	GKS07-3M □□□132C21	668
	286	2.3	345	2.1			286	10.124	GKS07-3M □□□132C21	668
	254	1.5	307	1.4			321	11.378	GKS07-3M □□□132C21	668
	227	1.9	275	1.8			359	12.711	GKS07-3M □□□132C21	668
	195	2.0	236	1.9			418	14.798	GKS07-3M □□□132C21	668
	179	3.2	217	3.0			455	16.122	GKS09-3M □□□132C21	668
	173	1.8	209	1.7			471	16.674	GKS07-3M □□□132C21	668
	167	1.6	202	1.5			488	17.270	GKS07-3M □□□132C21	668
	165	3.2	199	3.0			495	17.536	GKS09-3M □□□132C21	668
	141	1.5	170	1.5			579	20.511	GKS07-3M □□□132C21	668
	125	1.4	151	1.4			653	23.111	GKS07-3M □□□132C21	668
	115	1.3	138	1.3			713	25.244	GKS07-3M □□□132C21	668
	113	3.2	136	3.0			725	25.649	GKS09-3M □□□132C21	668
	102	1.2	123	1.1			799	28.274	GKS07-3M □□□132C21	668
	99	2.8	119	2.7			826	29.228	GKS09-3M □□□132C21	668
	91	1.1	110	1.0			900	31.858	GKS07-3M □□□132C21	668
	88	2.6	106	2.4			931	32.940	GKS09-3M □□□132C21	668
	82	2.5	99	2.3			994	35.193	GKS09-3M □□□132C21	668
	80	1.0	97	1.0			1019	36.063	GKS07-3M □□□132C21	668
	73	2.2	88	2.0			1120	39.662	GKS09-3M □□□132C21	668
	71	0.9	85	0.8			1156	40.906	GKS07-3M □□□132C21	668
	67	2.3	81	2.1			1219	43.146	GKS09-3M □□□132C21	668
	65	1.0	79	0.9			1248	44.178	GKS07-3M □□□132C21	668
	59	2.0	72	1.9			1374	48.625	GKS09-3M □□□132C21	668
	57	0.8					1422	50.345	GKS07-3M □□□132C21	668
	49	1.7	60	1.6			1651	58.456	GKS09-3M □□□132C21	668
	45	3.0	54	2.8			1836	64.995	GKS11-3M □□□132C21	668
	44	1.5	53	1.4			1861	65.879	GKS09-3M □□□132C21	668
	41	1.4	49	1.3			2005	70.982	GKS09-3M □□□132C21	668
	41	2.7	49	2.6			2002	70.887	GKS11-3M □□□132C21	668
	36	1.2	44	1.2			2260	79.996	GKS09-3M □□□132C21	668
	36	2.4	44	2.3			2256	79.873	GKS11-3M □□□132C21	668
	32	2.1	38	2.0			2591	91.737	GKS11-3M □□□132C21	668
	28	1.8	34	1.7			2836	102.119	GKS11-4M □□□132C21	676
	28	1.9	34	1.8			2920	103.365	GKS11-3M □□□132C21	668
	26	1.9	31	1.8			3145	111.335	GKS11-3M □□□132C21	668
	25	1.8	30	1.8			3195	115.063	GKS11-4M □□□132C21	676
	24	3.3	29	3.1			3318	119.493	GKS14-4M □□□132C21	676
	23	1.7	28	1.6			3544	125.448	GKS11-3M □□□132C21	668

50 Hz: P_N=9.0 kW
60 Hz: P_N=11.0 kW

n_N	2890 r/min		3490 r/min				M_2 [Nm]	i		
f_N	50 Hz		60 Hz							
P_N	9.0 kW		11.0 kW							
	n_2 [r/min]	c	n_2 [r/min]	c						
	23	1.7	28	1.6			3474	125.095	GKS11-4M □□□132C21	676
	22	3.0	26	2.9			3739	134.640	GKS14-4M □□□132C21	676
	21	1.5	25	1.4			3914	140.952	GKS11-4M □□□132C21	676
	21	3.0	25	2.9			3924	138.913	GKS14-3M □□□132C21	668
	19	1.4	23	1.3			4255	153.242	GKS11-4M □□□132C21	676
	19	2.6	22	2.5			4421	156.522	GKS14-3M □□□132C21	668
	18	2.6	22	2.5			4388	158.039	GKS14-4M □□□132C21	676
	17	1.2	20	1.2			4794	172.667	GKS11-4M □□□132C21	676
	16	1.1	19	1.1			5270	186.572	GKS11-3M □□□132C21	668
	16	2.2	19	2.1			5270	186.572	GKS14-3M □□□132C21	668
	16	2.3	20	2.2			4945	178.072	GKS14-4M □□□132C21	676
	15	2.1	18	2.0			5380	193.754	GKS14-4M □□□132C21	676
	14	1.0	17	0.9			5938	210.222	GKS11-3M □□□132C21	668
	14	1.1	17	1.0			5606	201.890	GKS11-4M □□□132C21	676
	14	2.0	17	1.9			5938	210.222	GKS14-3M □□□132C21	668
	13	0.9	15	0.9			6396	226.431	GKS11-3M □□□132C21	668
	13	1.0	15	0.9			6317	227.481	GKS11-4M □□□132C21	676
	13	1.8	15	1.7			6396	226.431	GKS14-3M □□□132C21	668
	13	1.9	16	1.8			6062	218.315	GKS14-4M □□□132C21	676
	12	0.9	14	0.8			6889	248.106	GKS11-4M □□□132C21	676
	12	1.7	15	1.7			6594	237.467	GKS14-4M □□□132C21	676
	11	0.8					7207	255.133	GKS11-3M □□□132C21	668
	11	1.6	13	1.5			7430	267.568	GKS14-4M □□□132C21	676
	11	1.6	14	1.5			7207	255.133	GKS14-3M □□□132C21	668
	10	1.4	12	1.4			8085	286.219	GKS14-3M □□□132C21	668
	9	1.3	11	1.2			8934	321.729	GKS14-4M □□□132C21	676
	9	1.3	11	1.2			9110	322.500	GKS14-3M □□□132C21	668
	8	1.1	9.6	1.1			10066	362.512	GKS14-4M □□□132C21	676
	7.4	1.1	8.9	1.0			10848	390.671	GKS14-4M □□□132C21	676
	6.6	0.9	7.9	0.9			12223	440.193	GKS14-4M □□□132C21	676
	5.6	0.8					14248	513.121	GKS14-4M □□□132C21	676

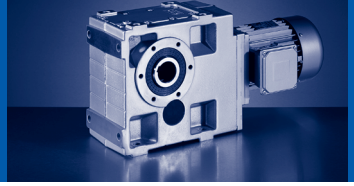

50 Hz: P_N=9.2 kW
60 Hz: P_N=11.0 kW
87 Hz: P_N=16.2 kW

n_N	1450 r/min		1750 r/min		2560 r/min		M_2 [Nm]	i		
f_N	50 Hz		60 Hz		87 Hz					
P_N	9.2 kW		11.0 kW		16.2 kW					
	n_2 [r/min]	c	n_2 [r/min]	c	n_2 [r/min]	c				
	244	1.4	294	1.3	430	1.2	343	5.955	GKS07-3M □□□132C32	668
	176	1.1	212	1.1	310	1.0	475	8.254	GKS07-3M □□□132C32	668
	158	1.4	191	1.3	279	1.2	528	9.171	GKS07-3M □□□132C32	668
	143	1.4	173	1.3	253	1.2	583	10.124	GKS07-3M □□□132C32	668
	127	0.9	154	0.9			655	11.378	GKS07-3M □□□132C32	668
	118	2.3	143	2.2	208	1.9	707	12.283	GKS09-3M □□□132C32	668
	114	1.1	138	1.1	201	1.0	732	12.711	GKS07-3M □□□132C32	668
	109	2.3	131	2.2	192	1.9	769	13.360	GKS09-3M □□□132C32	668
	98	1.2	118	1.2	173	1.0	852	14.798	GKS07-3M □□□132C32	668
	90	1.9	109	1.8	159	1.6	928	16.122	GKS09-3M □□□132C32	668
	87	1.1	105	1.1	154	0.9	960	16.674	GKS07-3M □□□132C32	668
	84	1.0	101	1.0	148	0.8	994	17.270	GKS07-3M □□□132C32	668
	83	1.9	100	1.8	146	1.6	1009	17.536	GKS09-3M □□□132C32	668
	74	2.3	90	2.2	131	1.9	1125	19.541	GKS09-3M □□□132C32	668
	71	0.9	85	0.9			1180	20.511	GKS07-3M □□□132C32	668
	66	2.1	80	2.0	116	1.8	1267	22.022	GKS09-3M □□□132C32	668
	63	0.9	76	0.8			1330	23.111	GKS07-3M □□□132C32	668
	57	0.8					1453	25.244	GKS07-3M □□□132C32	668
	57	1.9	68	1.8	100	1.6	1476	25.649	GKS09-3M □□□132C32	668
	52	3.2	63	3.0	91	2.7	1613	28.021	GKS11-3M □□□132C32	668
	50	1.7	60	1.7	88	1.5	1682	29.228	GKS09-3M □□□132C32	668
	46	3.0	55	2.9	81	2.5	1817	31.573	GKS11-3M □□□132C32	668
	44	1.6	53	1.5	78	1.3	1896	32.940	GKS09-3M □□□132C32	668
	41	1.5	50	1.4	73	1.3	2025	35.193	GKS09-3M □□□132C32	668
	41	2.8	49	2.6	72	2.3	2057	35.741	GKS11-3M □□□132C32	668
	37	1.3	44	1.3	65	1.1	2283	39.662	GKS09-3M □□□132C32	668
	36	2.5	44	2.4	64	2.1	2318	40.272	GKS11-3M □□□132C32	668
	34	1.2	41	1.2	59	1.2	2483	43.146	GKS09-3M □□□132C32	668
	33	2.3	40	2.3	59	2.2	2520	43.783	GKS11-3M □□□132C32	668
	30	1.1	36	1.1	53	1.0	2798	48.625	GKS09-3M □□□132C32	668
	29	2.1	36	2.1	52	2.0	2839	49.333	GKS11-3M □□□132C32	668
	25	0.9	30	0.9	44	0.9	3364	58.456	GKS09-3M □□□132C32	668
	25	1.8	30	1.8	44	1.7	3320	57.683	GKS11-3M □□□132C32	668
	23	3.2	28	3.2	40	3.0	3648	63.382	GKS14-3M □□□132C32	668
	22	0.8	27	0.8			3791	65.879	GKS09-3M □□□132C32	668
	22	1.6	27	1.6	39	1.5	3741	64.995	GKS11-3M □□□132C32	668
	21	1.5	25	1.5	36	1.4	4080	70.887	GKS11-3M □□□132C32	668
	21	2.9	25	2.9	37	2.7	3968	68.942	GKS14-3M □□□132C32	668
	19	2.6	23	2.6	33	2.5	4471	77.681	GKS14-3M □□□132C32	668
	18	1.3	22	1.3	32	1.3	4597	79.873	GKS11-3M □□□132C32	668
	16	1.1	19	1.1	28	1.1	5280	91.737	GKS11-3M □□□132C32	668

50 Hz: P_N=9.2 kW
60 Hz: P_N=11.0 kW
87 Hz: P_N=16.2 kW

n_N	1450 r/min		1750 r/min		2560 r/min		M_2 [Nm]	i		
f_N	50 Hz		60 Hz		87 Hz					
P_N	9.2 kW		11.0 kW		16.2 kW					
	n_2 [r/min]	c	n_2 [r/min]	c	n_2 [r/min]	c				
	16	2.2	19	2.2	28	2.1	5211	90.551	GKS14-3M □□□132C32	668
	15	1.8	18	1.8	26	1.7	5514	97.467	GKS14-4M □□□132C32	676
	14	1.0	17	1.0	25	1.0	5949	103.365	GKS11-3M □□□132C32	668
	14	1.0	17	1.0	25	0.9	5777	102.119	GKS11-4M □□□132C32	676
	14	2.0	17	2.0	25	1.9	5872	102.029	GKS14-3M □□□132C32	668
	13	0.9	16	0.9	23	0.9	6407	111.335	GKS11-3M □□□132C32	668
	13	0.9	15	0.9	22	0.9	6509	115.063	GKS11-4M □□□132C32	676
	13	1.8	16	1.8	23	1.7	6213	109.822	GKS14-4M □□□132C32	676
	13	1.9	16	1.9	23	1.8	6325	109.896	GKS14-3M □□□132C32	668
	12	0.8	14	0.8	20	0.8	7220	125.448	GKS11-3M □□□132C32	668
	12	0.8	14	0.8	21	0.8	7077	125.095	GKS11-4M □□□132C32	676
	12	1.6	15	1.6	21	1.6	6760	119.493	GKS14-4M □□□132C32	676
	12	1.6	14	1.6	21	1.6	7126	123.826	GKS14-3M □□□132C32	668
	11	1.5	13	1.5	19	1.5	7617	134.640	GKS14-4M □□□132C32	676
	10	1.5	13	1.5	18	1.5	7995	138.913	GKS14-3M □□□132C32	668
	9.3	1.3	11	1.3	16	1.3	9008	156.522	GKS14-3M □□□132C32	668
	9.2	1.3	11	1.3	16	1.3	8941	158.039	GKS14-4M □□□132C32	676
	8.1	1.1	9.8	1.1	14	1.1	10074	178.072	GKS14-4M □□□132C32	676
	7.8	1.1	9.4	1.1	14	1.1	10737	186.572	GKS14-3M □□□132C32	668
	7.5	1.1	9	1.1	13	1.1	10961	193.754	GKS14-4M □□□132C32	676
	6.9	1.0	8.3	1.0	12	1.0	12099	210.222	GKS14-3M □□□132C32	668
	6.6	0.9	8	0.9	12	0.9	12351	218.315	GKS14-4M □□□132C32	676
	6.4	0.9	7.7	0.9	11	0.9	13031	226.431	GKS14-3M □□□132C32	668
	6.1	0.9	7.4	0.9	11	0.9	13434	237.467	GKS14-4M □□□132C32	676

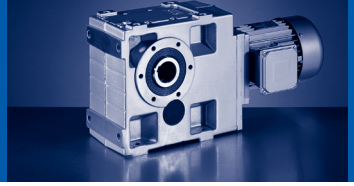

50 Hz: P_N=11.0 kW
60 Hz: P_N=13.2 kW
87 Hz: P_N=19.3 kW

n_N	1460 r/min		1760 r/min		2565 r/min		M_2 [Nm]	i		
f_N	50 Hz		60 Hz		87 Hz					
P_N	11.0 kW		13.2 kW		19.3 kW					
	n_2 [r/min]	c	n_2 [r/min]	c	n_2 [r/min]	c				
	245	1.2	296	1.1	432	1.0	407	5.955	GKS07-3M □□□160C22	668
	177	1.0	213	0.9	311	0.8	564	8.254	GKS07-3M □□□160C22	668
	159	1.2	192	1.1	280	1.0	627	9.171	GKS07-3M □□□160C22	668
	144	1.2	174	1.1	254	1.0	692	10.124	GKS07-3M □□□160C22	668
	119	1.9	143	1.8	209	1.6	839	12.283	GKS09-3M □□□160C22	668
	115	1.0	139	0.9	202	0.8	869	12.711	GKS07-3M □□□160C22	668
	109	1.9	132	1.8	192	1.6	913	13.360	GKS09-3M □□□160C22	668
	99	1.0	119	1.0	174	0.9	1011	14.798	GKS07-3M □□□160C22	668
	92	2.9	111	2.7	162	2.4	1085	15.874	GKS11-3M □□□160C22	668
	91	1.6	109	1.6	159	1.4	1102	16.122	GKS09-3M □□□160C22	668
	88	0.9	106	0.9			1140	16.674	GKS07-3M □□□160C22	668
	85	0.9	102	0.8			1180	17.270	GKS07-3M □□□160C22	668
	85	2.9	102	2.7	149	2.4	1180	17.265	GKS11-3M □□□160C22	668
	83	1.6	100	1.6	147	1.4	1198	17.536	GKS09-3M □□□160C22	668
	75	1.9	90	1.8	132	1.6	1335	19.541	GKS09-3M □□□160C22	668
	66	1.8	80	1.7	117	1.5	1505	22.022	GKS09-3M □□□160C22	668
	66	3.3	80	3.1	117	2.7	1503	21.989	GKS11-3M □□□160C22	668
	57	1.6	69	1.6	100	1.4	1753	25.649	GKS09-3M □□□160C22	668
	57	2.9	69	2.7	100	2.4	1751	25.615	GKS11-3M □□□160C22	668
	52	2.7	63	2.6	92	2.3	1915	28.021	GKS11-3M □□□160C22	668
	50	1.5	60	1.4	88	1.2	1997	29.228	GKS09-3M □□□160C22	668
	46	2.6	56	2.4	81	2.1	2158	31.573	GKS11-3M □□□160C22	668
	44	1.3	53	1.3	78	1.1	2251	32.940	GKS09-3M □□□160C22	668
	42	1.3	50	1.2	73	1.1	2405	35.193	GKS09-3M □□□160C22	668
	41	2.3	49	2.2	72	1.9	2443	35.741	GKS11-3M □□□160C22	668
	37	1.1	44	1.1	65	0.9	2711	39.662	GKS09-3M □□□160C22	668
	36	2.1	44	2.0	64	1.8	2752	40.272	GKS11-3M □□□160C22	668
	34	1.0	41	1.0	60	1.0	2949	43.146	GKS09-3M □□□160C22	668
	33	1.9	40	1.9	59	1.8	2992	43.783	GKS11-3M □□□160C22	668
	30	0.9	36	0.9	53	0.9	3323	48.625	GKS09-3M □□□160C22	668
	30	1.8	36	1.8	52	1.7	3371	49.333	GKS11-3M □□□160C22	668
	26	3.0	31	3.0	46	2.9	3844	56.251	GKS14-3M □□□160C22	668
	25	1.5	31	1.5	45	1.4	3942	57.683	GKS11-3M □□□160C22	668
	23	1.4	27	1.4	40	1.3	4442	64.995	GKS11-3M □□□160C22	668
	23	2.7	28	2.7	41	2.5	4332	63.382	GKS14-3M □□□160C22	668
	21	1.2	25	1.2	36	1.2	4844	70.887	GKS11-3M □□□160C22	668
	21	2.4	26	2.4	37	2.3	4712	68.942	GKS14-3M □□□160C22	668
	19	2.2	23	2.2	33	2.1	5309	77.681	GKS14-3M □□□160C22	668
	18	1.1	22	1.1	32	1.1	5459	79.873	GKS11-3M □□□160C22	668
	16	1.9	19	1.9	28	1.8	6188	90.551	GKS14-3M □□□160C22	668
	15	1.5	18	1.5	26	1.5	6548	97.467	GKS14-4M □□□160C22	676

50 Hz: P_N=11.0 kW
60 Hz: P_N=13.2 kW
87 Hz: P_N=19.3 kW

n_N	1460 r/min		1760 r/min		2565 r/min		M_2 [Nm]	i		
f_N	50 Hz		60 Hz		87 Hz					
P_N	11.0 kW		13.2 kW		19.3 kW					
	n_2 [r/min]	c	n_2 [r/min]	c	n_2 [r/min]	c				
	14	1.7	17	1.7	25	1.6	6973	102.029	GKS14-3M □□□160C22	668
	13	1.5	16	1.5	23	1.4	7378	109.822	GKS14-4M □□□160C22	676
	13	1.6	16	1.6	23	1.5	7510	109.896	GKS14-3M □□□160C22	668
	12	1.3	15	1.3	22	1.3	8027	119.493	GKS14-4M □□□160C22	676
	12	1.4	14	1.4	21	1.4	8462	123.826	GKS14-3M □□□160C22	668
	11	1.3	13	1.3	19	1.3	9045	134.640	GKS14-4M □□□160C22	676
	9.2	1.1	11	1.1	16	1.1	10617	158.039	GKS14-4M □□□160C22	676
	8.2	1.0	9.9	1.0	14	1.0	11963	178.072	GKS14-4M □□□160C22	676
	7.8	0.9	9.4	0.9	14	0.9	12750	186.572	GKS14-3M □□□160C22	668
	7.5	0.9	9.1	0.9	13	0.9	13016	193.754	GKS14-4M □□□160C22	676
	7	0.8	8.4	0.8	12	0.8	14367	210.222	GKS14-3M □□□160C22	668

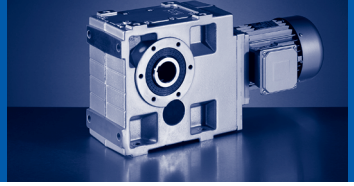

50 Hz: P_N=15.0 kW
60 Hz: P_N=18.0 kW
87 Hz: P_N=26.4 kW

n_N	1460 r/min		1760 r/min		2565 r/min		M_2 [Nm]	i		
f_N	50 Hz		60 Hz		87 Hz					
P_N	15.0 kW		18.0 kW		26.4 kW					
	n_2 [r/min]	c	n_2 [r/min]	c	n_2 [r/min]	c				
	245	0.9	296	0.8			555	5.955	GKS07-3M □□□160C32	668
	159	0.9	192	0.8			855	9.171	GKS07-3M □□□160C32	668
	144	0.9	174	0.8			943	10.124	GKS07-3M □□□160C32	668
	121	2.5	146	2.3	213	2.1	1127	12.094	GKS11-3M □□□160C32	668
	119	1.4	143	1.3	209	1.2	1145	12.283	GKS09-3M □□□160C32	668
	111	2.5	134	2.3	195	2.1	1226	13.154	GKS11-3M □□□160C32	668
	109	1.4	132	1.3	192	1.2	1245	13.360	GKS09-3M □□□160C32	668
	92	2.1	111	2.0	162	1.8	1479	15.874	GKS11-3M □□□160C32	668
	91	1.2	109	1.1	159	1.0	1502	16.122	GKS09-3M □□□160C32	668
	85	2.1	102	2.0	149	1.8	1609	17.265	GKS11-3M □□□160C32	668
	83	1.2	100	1.1	147	1.0	1634	17.536	GKS09-3M □□□160C32	668
	75	1.4	90	1.3	132	1.2	1821	19.541	GKS09-3M □□□160C32	668
	75	2.5	90	2.3	132	2.1	1819	19.515	GKS11-3M □□□160C32	668
	66	1.3	80	1.2	117	1.1	2052	22.022	GKS09-3M □□□160C32	668
	66	2.4	80	2.3	117	2.0	2049	21.989	GKS11-3M □□□160C32	668
	57	1.2	69	1.1	100	1.0	2390	25.649	GKS09-3M □□□160C32	668
	57	2.1	69	2.0	100	1.8	2387	25.615	GKS11-3M □□□160C32	668
	52	2.0	63	1.9	92	1.7	2611	28.021	GKS11-3M □□□160C32	668
	50	1.1	60	1.0	88	0.9	2724	29.228	GKS09-3M □□□160C32	668
	46	1.9	56	1.8	81	1.6	2942	31.573	GKS11-3M □□□160C32	668
	44	1.0	53	0.9	78	0.8	3070	32.940	GKS09-3M □□□160C32	668
	42	0.9	50	0.9			3280	35.193	GKS09-3M □□□160C32	668
	42	3.1	51	2.9	74	2.6	3233	34.692	GKS14-3M □□□160C32	668
	41	1.7	49	1.6	72	1.4	3331	35.741	GKS11-3M □□□160C32	668
	37	0.8					3696	39.662	GKS09-3M □□□160C32	668
	37	3.0	45	2.9	66	2.5	3643	39.089	GKS14-3M □□□160C32	668
	36	1.6	44	1.5	64	1.3	3753	40.272	GKS11-3M □□□160C32	668
	34	2.7	41	2.7	60	2.6	3964	42.531	GKS14-3M □□□160C32	668
	33	1.4	40	1.4	59	1.4	4080	43.783	GKS11-3M □□□160C32	668
	31	2.5	37	2.5	54	2.4	4466	47.923	GKS14-3M □□□160C32	668
	30	1.3	36	1.3	52	1.2	4597	49.333	GKS11-3M □□□160C32	668
	26	2.2	31	2.2	46	2.1	5242	56.251	GKS14-3M □□□160C32	668
	25	1.1	31	1.1	45	1.1	5376	57.683	GKS11-3M □□□160C32	668
	23	1.0	27	1.0	40	0.9	6057	64.995	GKS11-3M □□□160C32	668
	23	1.9	28	1.9	41	1.8	5907	63.382	GKS14-3M □□□160C32	668
	21	0.9	25	0.9	36	0.9	6606	70.887	GKS11-3M □□□160C32	668
	21	1.8	26	1.8	37	1.7	6425	68.942	GKS14-3M □□□160C32	668
	19	1.6	23	1.6	33	1.5	7239	77.681	GKS14-3M □□□160C32	668
	18	0.8	22	0.8			7443	79.873	GKS11-3M □□□160C32	668
	16	1.4	19	1.4	28	1.3	8438	90.551	GKS14-3M □□□160C32	668
	15	1.1	18	1.1	26	1.1	8929	97.467	GKS14-4M □□□160C32	676

50 Hz: P_N=15.0 kW
60 Hz: P_N=18.0 kW
87 Hz: P_N=26.4 kW

n_N	1460 r/min		1760 r/min		2565 r/min		M_2 [Nm]	i		
f_N	50 Hz		60 Hz		87 Hz					
P_N	15.0 kW		18.0 kW		26.4 kW					
	n_2 [r/min]	c	n_2 [r/min]	c	n_2 [r/min]	c				
	14	1.2	17	1.2	25	1.2	9508	102.029	GKS14-3M □□□160C32	668
	13	1.1	16	1.1	23	1.0	10060	109.822	GKS14-4M □□□160C32	676
	13	1.2	16	1.2	23	1.1	10241	109.896	GKS14-3M □□□160C32	668
	12	1.0	14	1.0	21	1.0	11539	123.826	GKS14-3M □□□160C32	668
	12	1.0	15	1.0	22	1.0	10946	119.493	GKS14-4M □□□160C32	676
	11	0.9	13	0.9	19	0.9	12334	134.640	GKS14-4M □□□160C32	676

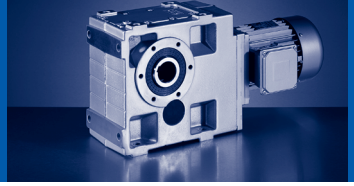

50 Hz: P_N=18.5 kW
60 Hz: P_N=22.2 kW
87 Hz: P_N=32.4 kW

n_N	1470 r/min		1770 r/min		2575 r/min		M_2 [Nm]	i		
f_N	50 Hz		60 Hz		87 Hz					
P_N	18.5 kW		22.2 kW		32.4 kW					
	n_2 [r/min]	c	n_2 [r/min]	c	n_2 [r/min]	c				
	122	2.0	146	1.9	213	1.7	1381	12.094	GKS11-3M □□□180C12	668
	120	1.2	144	1.1	210	1.0	1402	12.283	GKS09-3M □□□180C12	668
	112	2.0	135	1.9	196	1.7	1502	13.154	GKS11-3M □□□180C12	668
	110	1.2	133	1.1	193	1.0	1525	13.360	GKS09-3M □□□180C12	668
	93	1.7	112	1.6	163	1.4	1812	15.874	GKS11-3M □□□180C12	668
	91	1.0	110	0.9	160	0.8	1840	16.122	GKS09-3M □□□180C12	668
	88	2.8	106	2.7	155	2.3	1900	16.646	GKS14-3M □□□180C12	668
	85	1.7	103	1.6	149	1.4	1971	17.265	GKS11-3M □□□180C12	668
	84	1.0	101	0.9	147	0.8	2002	17.536	GKS09-3M □□□180C12	668
	80	2.8	97	2.7	141	2.3	2090	18.311	GKS14-3M □□□180C12	668
	75	1.2	91	1.1	132	1.0	2231	19.541	GKS09-3M □□□180C12	668
	75	2.0	91	1.9	132	1.7	2228	19.515	GKS11-3M □□□180C12	668
	67	1.1	80	1.0	117	0.9	2514	22.022	GKS09-3M □□□180C12	668
	67	2.0	81	1.8	117	1.6	2510	21.989	GKS11-3M □□□180C12	668
	60	2.8	72	2.7	105	2.3	2819	24.696	GKS14-3M □□□180C12	668
	57	1.0	69	0.9	101	0.8	2928	25.649	GKS09-3M □□□180C12	668
	57	1.7	69	1.6	101	1.4	2924	25.615	GKS11-3M □□□180C12	668
	54	2.8	65	2.7	95	2.3	3101	27.165	GKS14-3M □□□180C12	668
	53	1.6	63	1.5	92	1.4	3199	28.021	GKS11-3M □□□180C12	668
	50	0.9	61	0.8			3337	29.228	GKS09-3M □□□180C12	668
	48	2.8	58	2.7	84	2.3	3494	30.609	GKS14-3M □□□180C12	668
	47	1.5	56	1.5	82	1.3	3604	31.573	GKS11-3M □□□180C12	668
	42	2.5	51	2.4	74	2.1	3960	34.692	GKS14-3M □□□180C12	668
	41	1.4	50	1.3	72	1.2	4080	35.741	GKS11-3M □□□180C12	668
	38	2.5	45	2.3	66	2.1	4462	39.089	GKS14-3M □□□180C12	668
	37	1.3	44	1.2	64	1.1	4597	40.272	GKS11-3M □□□180C12	668
	35	2.2	42	2.2	61	2.1	4855	42.531	GKS14-3M □□□180C12	668
	34	1.2	40	1.2	59	1.1	4998	43.783	GKS11-3M □□□180C12	668
	31	2.1	37	2.1	54	2.0	5471	47.923	GKS14-3M □□□180C12	668
	30	1.1	36	1.1	52	1.0	5632	49.333	GKS11-3M □□□180C12	668
	26	0.9	31	0.9	45	0.9	6585	57.683	GKS11-3M □□□180C12	668
	26	1.8	32	1.8	46	1.7	6421	56.251	GKS14-3M □□□180C12	668
	23	0.8	27	0.8			7419	64.995	GKS11-3M □□□180C12	668
	23	1.6	28	1.6	41	1.5	7235	63.382	GKS14-3M □□□180C12	668
	21	1.5	26	1.5	37	1.4	7870	68.942	GKS14-3M □□□180C12	668
	19	1.3	23	1.3	33	1.2	8868	77.681	GKS14-3M □□□180C12	668
	16	1.1	20	1.1	29	1.1	10337	90.551	GKS14-3M □□□180C12	668
	15	0.9	18	0.9	27	0.9	10937	97.467	GKS14-4M □□□180C12	676
	14	1.0	17	1.0	25	1.0	11647	102.029	GKS14-3M □□□180C12	668
	13	0.9	16	0.9	24	0.9	12545	109.896	GKS14-3M □□□180C12	668
	13	0.9	16	0.9	24	0.8	12323	109.822	GKS14-4M □□□180C12	676

50 Hz: P_N=18.5 kW
60 Hz: P_N=22.2 kW
87 Hz: P_N=32.4 kW

n_N	1470 r/min		1770 r/min		2575 r/min		M_2 [Nm]	i		
f_N	50 Hz		60 Hz		87 Hz					
P_N	18.5 kW		22.2 kW		32.4 kW					
	n_2 [r/min]	c	n_2 [r/min]	c	n_2 [r/min]	c				
	12	0.8	14	0.8	21	0.8	14135	123.826	GKS14-3M □□□180C12	668
	12	0.8	15	0.8	22	0.8	13409	119.493	GKS14-4M □□□180C12	676

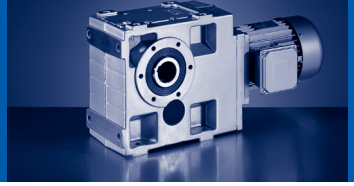

50 Hz: P_N=22.0 kW
60 Hz: P_N=26.4 kW
87 Hz: P_N=38.7 kW

n_N	1465 r/min		1765 r/min		2560 r/min		M_2 [Nm]	i		
f_N	50 Hz		60 Hz		87 Hz					
P_N	22.0 kW		26.4 kW		38.7 kW					
	n_2 [r/min]	c	n_2 [r/min]	c	n_2 [r/min]	c				
	121	1.7	146	1.6	213	1.4	1647	12.094	GKS11-3M □□□180C32	668
	119	1.0	144	0.9	210	0.8	1673	12.283	GKS09-3M □□□180C32	668
	111	1.7	134	1.6	196	1.4	1792	13.154	GKS11-3M □□□180C32	668
	110	1.0	132	0.9	193	0.8	1820	13.360	GKS09-3M □□□180C32	668
	92	1.4	111	1.4	162	1.2	2162	15.874	GKS11-3M □□□180C32	668
	91	0.8					2196	16.122	GKS09-3M □□□180C32	668
	88	2.6	106	2.5	155	2.2	2267	16.646	GKS14-3M □□□180C32	668
	85	1.4	102	1.4	149	1.2	2352	17.265	GKS11-3M □□□180C32	668
	84	0.8					2389	17.536	GKS09-3M □□□180C32	668
	80	2.5	96	2.3	141	2.1	2494	18.311	GKS14-3M □□□180C32	668
	75	1.0	90	0.9	132	0.8	2662	19.541	GKS09-3M □□□180C32	668
	75	1.7	90	1.6	132	1.4	2658	19.515	GKS11-3M □□□180C32	668
	67	0.9	80	0.8			3000	22.022	GKS09-3M □□□180C32	668
	67	1.6	80	1.5	117	1.4	2995	21.989	GKS11-3M □□□180C32	668
	59	2.6	72	2.5	104	2.2	3364	24.696	GKS14-3M □□□180C32	668
	57	0.8					3494	25.649	GKS09-3M □□□180C32	668
	57	1.4	69	1.4	101	1.2	3489	25.615	GKS11-3M □□□180C32	668
	54	2.5	65	2.3	95	2.1	3700	27.165	GKS14-3M □□□180C32	668
	52	1.4	63	1.3	92	1.1	3817	28.021	GKS11-3M □□□180C32	668
	48	2.4	58	2.3	84	2.0	4169	30.609	GKS14-3M □□□180C32	668
	46	1.3	56	1.2	82	1.1	4301	31.573	GKS11-3M □□□180C32	668
	42	2.1	51	2.0	74	1.8	4725	34.692	GKS14-3M □□□180C32	668
	41	1.2	49	1.1	72	1.0	4868	35.741	GKS11-3M □□□180C32	668
	38	2.1	45	2.0	66	1.7	5324	39.089	GKS14-3M □□□180C32	668
	36	1.1	44	1.0	64	0.9	5486	40.272	GKS11-3M □□□180C32	668
	34	1.0	40	1.0	59	0.9	5964	43.783	GKS11-3M □□□180C32	668
	34	1.9	42	1.9	61	1.8	5793	42.531	GKS14-3M □□□180C32	668
	31	1.7	37	1.7	54	1.6	6528	47.923	GKS14-3M □□□180C32	668
	30	0.9	36	0.9	52	0.8	6720	49.333	GKS11-3M □□□180C32	668
	26	1.5	31	1.5	46	1.4	7662	56.251	GKS14-3M □□□180C32	668
	23	1.3	28	1.3	41	1.3	8633	63.382	GKS14-3M □□□180C32	668
	21	1.2	26	1.2	37	1.2	9391	68.942	GKS14-3M □□□180C32	668
	19	1.1	23	1.1	33	1.0	10581	77.681	GKS14-3M □□□180C32	668
	16	0.9	20	0.9	28	0.9	12334	90.551	GKS14-3M □□□180C32	668
	14	0.8	17	0.8			13898	102.029	GKS14-3M □□□180C32	668

50 Hz: P_N=30.0 kW
60 Hz: P_N=36.0 kW
87 Hz: P_N=52.7 kW

n_N	1465 r/min		1765 r/min		2565 r/min		M_2 [Nm]	i		
f_N	50 Hz		60 Hz		87 Hz					
P_N	30.0 kW		36.0 kW		52.7 kW					
	n_2 [r/min]	c	n_2 [r/min]	c	n_2 [r/min]	c				
	121	1.2	146	1.2			2246	12.094	GKS11-3M □□□180C42	668
	111	1.2	134	1.2			2443	13.154	GKS11-3M □□□180C42	668
	92	1.1	111	1.0			2949	15.874	GKS11-3M □□□180C42	668
	88	1.9	106	1.8			3092	16.646	GKS14-3M □□□180C42	668
	85	1.1	102	1.0			3207	17.265	GKS11-3M □□□180C42	668
	80	1.8	96	1.7			3401	18.311	GKS14-3M □□□180C42	668
	75	1.2	90	1.2			3625	19.515	GKS11-3M □□□180C42	668
	67	1.2	80	1.1			4084	21.989	GKS11-3M □□□180C42	668
	59	1.9	72	1.8			4587	24.696	GKS14-3M □□□180C42	668
	57	1.1	69	1.0			4758	25.615	GKS11-3M □□□180C42	668
	54	1.8	65	1.7			5046	27.165	GKS14-3M □□□180C42	668
	52	1.0	63	0.9			5205	28.021	GKS11-3M □□□180C42	668
	48	1.8	58	1.7			5685	30.609	GKS14-3M □□□180C42	668
	46	0.9	56	0.9			5865	31.573	GKS11-3M □□□180C42	668
	42	1.6	51	1.5			6444	34.692	GKS14-3M □□□180C42	668
	41	0.9	49	0.8			6639	35.741	GKS11-3M □□□180C42	668
	38	1.5	45	1.4			7261	39.089	GKS14-3M □□□180C42	668
	34	1.4	42	1.4			7900	42.531	GKS14-3M □□□180C42	668
	31	1.3	37	1.3			8901	47.923	GKS14-3M □□□180C42	668
	26	1.1	31	1.1			10448	56.251	GKS14-3M □□□180C42	668
	23	1.0	28	1.0			11773	63.382	GKS14-3M □□□180C42	668
	21	0.9	26	0.9			12806	68.942	GKS14-3M □□□180C42	668

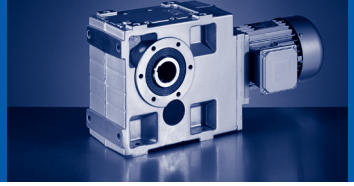

50 Hz: P_N=37.0 kW
60 Hz: P_N=45.0 kW

n_N	1475 r/min		1770 r/min				M_2 [Nm]	i		
f_N	50 Hz		60 Hz							
P_N	37.0 kW		45.0 kW							
	n_2 [r/min]	c	n_2 [r/min]	c						
	122	1.0	146	1.0			2752	12.094	GKS11-3M □□□225C12	668
	119	1.8	142	1.7			2829	12.435	GKS14-3M □□□225C12	668
	112	1.0	135	1.0			2993	13.154	GKS11-3M □□□225C12	668
	109	1.8	131	1.7			3077	13.525	GKS14-3M □□□225C12	668
	93	0.9	112	0.8			3612	15.874	GKS11-3M □□□225C12	668
	89	1.6	106	1.5			3788	16.646	GKS14-3M □□□225C12	668
	85	0.9	103	0.8			3928	17.265	GKS11-3M □□□225C12	668
	81	1.5	97	1.4			4166	18.311	GKS14-3M □□□225C12	668
	76	1.0	91	1.0			4440	19.515	GKS11-3M □□□225C12	668
	74	1.8	88	1.7			4566	20.065	GKS14-3M □□□225C12	668
	67	1.0	81	0.9			5003	21.989	GKS11-3M □□□225C12	668
	65	1.8	78	1.7			5144	22.609	GKS14-3M □□□225C12	668
	60	1.6	72	1.5			5619	24.696	GKS14-3M □□□225C12	668
	58	0.9	69	0.8			5828	25.615	GKS11-3M □□□225C12	668
	54	1.5	65	1.4			6181	27.165	GKS14-3M □□□225C12	668
	53	0.8					6376	28.021	GKS11-3M □□□225C12	668
	48	1.5	58	1.4			6964	30.609	GKS14-3M □□□225C12	668
	43	1.3	51	1.2			7893	34.692	GKS14-3M □□□225C12	668
	38	1.2	45	1.2			8894	39.089	GKS14-3M □□□225C12	668
	35	1.1	42	1.1			9677	42.531	GKS14-3M □□□225C12	668
	31	1.0	37	1.0			10904	47.923	GKS14-3M □□□225C12	668
	26	0.9	32	0.9			12799	56.251	GKS14-3M □□□225C12	668

50 Hz: P_N=45.0 kW
60 Hz: P_N=54.0 kW

n_N	1480 r/min		1775 r/min				M_2 [Nm]	i		
f_N	50 Hz		60 Hz							
P_N	45.0 kW		54.0 kW							
	n_2 [r/min]	c	n_2 [r/min]	c						
	122	0.8					3335	12.094	GKS11-3M □□□225C22	668
	119	1.5	143	1.4			3429	12.435	GKS14-3M □□□225C22	668
	113	0.8					3628	13.154	GKS11-3M □□□225C22	668
	109	1.5	131	1.4			3730	13.525	GKS14-3M □□□225C22	668
	89	1.3	107	1.2			4591	16.646	GKS14-3M □□□225C22	668
	81	1.2	97	1.2			5050	18.311	GKS14-3M □□□225C22	668
	76	0.8					5382	19.515	GKS11-3M □□□225C22	668
	74	1.5	89	1.4			5534	20.065	GKS14-3M □□□225C22	668
	67	0.8					6064	21.989	GKS11-3M □□□225C22	668
	66	1.5	79	1.4			6235	22.609	GKS14-3M □□□225C22	668
	60	1.3	72	1.2			6811	24.696	GKS14-3M □□□225C22	668
	55	1.2	65	1.2			7492	27.165	GKS14-3M □□□225C22	668
	48	1.2	58	1.1			8442	30.609	GKS14-3M □□□225C22	668
	43	1.1	51	1.0			9568	34.692	GKS14-3M □□□225C22	668
	38	1.0	45	1.0			10781	39.089	GKS14-3M □□□225C22	668
	35	0.9	42	0.9			11730	42.531	GKS14-3M □□□225C22	668
	31	0.9	37	0.9			13217	47.923	GKS14-3M □□□225C22	668

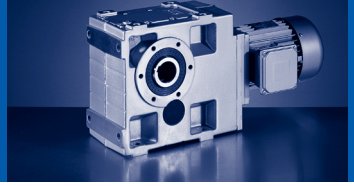

50 Hz: P_N=0.75 kW
60 Hz: P_N=0.92 kW
87 Hz: P_N=1.35 kW

n_N	1410 r/min		1710 r/min		2520 r/min		M_2 [Nm]	i		
f_N	50 Hz		60 Hz		87 Hz					
P_N	0.75 kW		0.92 kW		1.35 kW					
	n_2 [r/min]	c	n_2 [r/min]	c	n_2 [r/min]	c				
	275	3.3	334	3.1	492	2.7	25	5.123	GKS04-3M □□□080C32	684
	201	2.7	243	2.6	359	2.3	34	7.025	GKS04-3M □□□080C32	684
	173	3.3	209	3.1	309	2.7	39	8.167	GKS04-3M □□□080C32	684
	157	2.4	190	2.3	280	2.0	43	8.991	GKS04-3M □□□080C32	684
	143	2.2	174	2.1	256	1.9	48	9.836	GKS04-3M □□□080C32	684
	120	3.2	146	3.0	215	2.7	57	11.730	GKS04-3M □□□080C32	684
	108	2.6	131	2.5	193	2.2	63	13.067	GKS04-3M □□□080C32	684
	107	2.6	130	2.5	191	2.2	64	13.176	GKS05-3M □□□080C32	684
	98	2.4	119	2.3	176	2.0	69	14.333	GKS04-3M □□□080C32	684
	88	2.3	106	2.2	157	2.0	78	16.087	GKS04-3M □□□080C32	684
	79	1.9	95	1.8	141	1.6	87	17.920	GKS04-3M □□□080C32	684
	69	1.8	83	1.8	122	1.5	99	20.588	GKS04-3M □□□080C32	684
	63	1.7	76	1.6	112	1.4	109	22.522	GKS04-3M □□□080C32	684
	56	1.4	68	1.3	100	1.2	121	25.088	GKS04-3M □□□080C32	684
	49	1.3	60	1.3	88	1.1	139	28.727	GKS04-3M □□□080C32	684
	47	2.3	57	2.2	84	1.9	144	29.931	GKS05-3M □□□080C32	684
	44	1.1	53	1.0	79	0.9	154	32.000	GKS04-3M □□□080C32	684
	43	2.1	52	2.0	77	1.8	158	32.744	GKS05-3M □□□080C32	684
	40	1.1	49	1.0	72	0.9	170	35.191	GKS04-3M □□□080C32	684
	38	1.7	46	1.6	68	1.4	178	36.894	GKS05-3M □□□080C32	684
	36	0.9	44	0.9			189	39.200	GKS04-3M □□□080C32	684
	34	1.6	41	1.6	60	1.4	202	41.765	GKS05-3M □□□080C32	684
	32	0.9	39	0.9	57	0.8	213	44.240	GKS04-3M □□□080C32	684
	30	1.3	36	1.3	54	1.3	227	47.059	GKS05-3M □□□080C32	684
	28	1.3	33	1.3	49	1.3	247	51.162	GKS05-3M □□□080C32	684
	25	1.1	30	1.1	44	1.1	278	57.647	GKS05-3M □□□080C32	684
	24	2.5	30	2.5	44	2.4	279	57.882	GKS06-3M □□□080C32	684
	22	2.0	26	2.0	39	1.9	315	65.207	GKS06-3M □□□080C32	684
	21	1.0	26	1.0	38	1.0	321	66.592	GKS05-3M □□□080C32	684
	20	2.0	24	2.0	35	1.9	347	72.000	GKS06-3M □□□080C32	684
	19	0.9	23	0.9	34	0.8	362	75.033	GKS05-3M □□□080C32	684
	17	0.8	21	0.8			400	82.833	GKS05-3M □□□080C32	684
	17	1.6	21	1.6	31	1.5	391	81.111	GKS06-3M □□□080C32	684
	15	1.6	18	1.6	27	1.5	450	93.176	GKS06-3M □□□080C32	684
	15	2.9	19	2.9	27	2.8	447	92.563	GKS07-3M □□□080C32	684
	14	1.4	17	1.4	24	1.3	492	103.721	GKS06-4M □□□080C32	692
	14	2.4	16	2.4	24	2.3	503	104.296	GKS07-3M □□□080C32	684
	14	2.6	17	2.6	25	2.5	489	103.039	GKS07-4M □□□080C32	692
	13	1.0	15	1.0	22	1.0	537	113.205	GKS06-4M □□□080C32	692
	13	1.3	16	1.3	24	1.2	506	104.967	GKS06-3M □□□080C32	684
	13	1.3	15	1.3	22	1.3	546	113.082	GKS06-3M □□□080C32	684

50 Hz: P_N=0.75 kW
60 Hz: P_N=0.92 kW
87 Hz: P_N=1.35 kW

n_N	1410 r/min		1710 r/min		2520 r/min		M_2 [Nm]	i		
f_N	50 Hz		60 Hz		87 Hz					
P_N	0.75 kW		0.92 kW		1.35 kW					
	n_2 [r/min]	c	n_2 [r/min]	c	n_2 [r/min]	c				
	13	2.0	15	2.0	22	2.0	533	112.391	GKS07-4M □□□080C32	692
	13	2.5	15	2.5	22	2.5	542	112.338	GKS07-3M □□□080C32	684
	11	1.0	13	1.0	20	1.0	615	127.392	GKS06-3M □□□080C32	684
	11	1.1	14	1.1	20	1.1	603	127.059	GKS06-4M □□□080C32	692
	11	2.0	14	2.0	20	2.0	611	126.578	GKS07-3M □□□080C32	684
	11	2.2	14	2.2	20	2.2	599	126.222	GKS07-4M □□□080C32	692
	10	0.8	12	0.8	18	0.8	668	140.816	GKS06-4M □□□080C32	692
	10	1.6	12	1.6	18	1.6	653	137.748	GKS07-4M □□□080C32	692
	9.9	1.0	12	1.0	18	1.0	690	142.941	GKS06-3M □□□080C32	684
	9.1	0.9	11	0.9	16	0.9	738	155.647	GKS06-4M □□□080C32	692
	9.1	1.8	11	1.8	16	1.8	733	154.622	GKS07-4M □□□080C32	692
	8.8	0.8	11	0.8	16	0.8	777	161.029	GKS06-3M □□□080C32	684
	7.9	1.2	9.5	1.2	14	1.2	850	179.201	GKS07-4M □□□080C32	692
	7.6	1.5	9.3	1.5	14	1.5	891	184.600	GKS07-3M □□□080C32	684
	7	1.4	8.5	1.4	13	1.4	955	201.254	GKS07-4M □□□080C32	692
	6.8	1.2	8.2	1.2	12	1.2	1004	208.000	GKS07-3M □□□080C32	684
	6.3	1.0	7.7	1.0	11	1.0	1057	222.909	GKS07-4M □□□080C32	692
	6.3	1.2	7.6	1.2	11	1.2	1081	224.037	GKS07-3M □□□080C32	684
	5.7	1.1	6.9	1.1	10	1.1	1170	246.659	GKS07-4M □□□080C32	692
	5.6	1.0	6.8	1.0	10	1.0	1218	252.436	GKS07-3M □□□080C32	684
	5.2	0.8	6.3	0.8	9.2	0.8	1296	273.199	GKS07-4M □□□080C32	692
	5	1.0	6	1.0	8.9	1.0	1366	283.193	GKS07-3M □□□080C32	684
	4.4	0.9	5.3	0.9	7.9	0.9	1523	321.049	GKS07-4M □□□080C32	692
	4.4	2.0	5.3	2.0	7.8	2.0	1534	323.365	GKS09-4M □□□080C32	692
	3.9	1.8	4.7	1.8	6.9	1.8	1728	364.427	GKS09-4M □□□080C32	692
	3.5	1.6	4.3	1.6	6.3	1.6	1908	402.234	GKS09-4M □□□080C32	692
	3.1	1.4	3.8	1.4	5.6	1.4	2150	453.311	GKS09-4M □□□080C32	692
	2.7	1.2	3.3	1.2	4.8	1.2	2469	520.538	GKS09-4M □□□080C32	692
	2.4	1.1	2.9	1.1	4.3	1.1	2782	586.638	GKS09-4M □□□080C32	692
	2.2	1.0	2.7	1.0	4	1.0	2996	631.744	GKS09-4M □□□080C32	692
	2	0.9	2.4	0.9	3.5	0.9	3377	711.965	GKS09-4M □□□080C32	692
	1.7	1.5	2.1	1.5	3.1	1.5	3872	816.455	GKS11-4M □□□080C32	692
	1.5	1.4	1.9	1.4	2.7	1.4	4363	919.949	GKS11-4M □□□080C32	692
	1.4	1.3	1.7	1.3	2.5	1.3	4700	990.879	GKS11-4M □□□080C32	692
	1.3	1.2	1.5	1.2	2.3	1.2	5295	1116.484	GKS11-4M □□□080C32	692
	1.1	1.0	1.4	1.0	2	1.0	5940	1252.516	GKS11-4M □□□080C32	692
	1	0.9	1.2	0.9	1.8	0.9	6693	1411.286	GKS11-4M □□□080C32	692

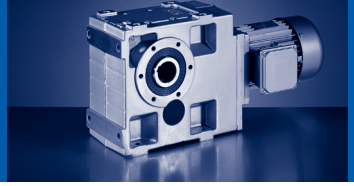

50 Hz: P_N=1.1 kW
60 Hz: P_N=1.3 kW
87 Hz: P_N=2.0 kW

n_N	1430 r/min		1730 r/min		2540 r/min		M_2 [Nm]	i		
f_N	50 Hz		60 Hz		87 Hz					
P_N	1.1 kW		1.3 kW		2.0 kW					
	n_2 [r/min]	c	n_2 [r/min]	c	n_2 [r/min]	c				
	279	2.3	338	2.2	496	1.9	36	5.123	GKS04-3M □□□090C12	684
	208	3.1	252	2.9	370	2.6	48	6.863	GKS05-3M □□□090C12	684
	204	1.9	246	1.8	362	1.6	49	7.025	GKS04-3M □□□090C12	684
	175	2.3	212	2.2	311	1.9	57	8.167	GKS04-3M □□□090C12	684
	159	1.6	192	1.6	283	1.4	63	8.991	GKS04-3M □□□090C12	684
	152	2.5	184	2.4	270	2.1	66	9.412	GKS05-3M □□□090C12	684
	145	1.6	176	1.5	258	1.3	69	9.836	GKS04-3M □□□090C12	684
	135	3.1	164	2.9	240	2.6	74	10.569	GKS05-3M □□□090C12	684
	123	3.1	148	2.9	218	2.6	81	11.667	GKS05-3M □□□090C12	684
	122	2.2	148	2.1	217	1.9	82	11.730	GKS04-3M □□□090C12	684
	109	1.8	132	1.7	194	1.5	91	13.067	GKS04-3M □□□090C12	684
	109	1.8	131	1.7	193	1.5	92	13.176	GKS05-3M □□□090C12	684
	100	1.6	121	1.6	177	1.4	100	14.333	GKS04-3M □□□090C12	684
	99	2.5	119	2.4	175	2.1	101	14.494	GKS05-3M □□□090C12	684
	89	1.6	108	1.5	158	1.4	112	16.087	GKS04-3M □□□090C12	684
	89	2.5	108	2.4	159	2.1	112	16.000	GKS05-3M □□□090C12	684
	84	2.6	101	2.5	149	2.2	119	17.054	GKS05-3M □□□090C12	684
	80	1.3	97	1.3	142	1.1	125	17.920	GKS04-3M □□□090C12	684
	74	2.2	90	2.1	132	1.9	134	19.216	GKS05-3M □□□090C12	684
	70	1.3	84	1.2	123	1.1	144	20.588	GKS04-3M □□□090C12	684
	64	1.2	77	1.1	113	1.0	157	22.522	GKS04-3M □□□090C12	684
	61	2.0	74	1.9	109	1.7	163	23.388	GKS05-3M □□□090C12	684
	57	1.0	69	0.9	101	0.8	175	25.088	GKS04-3M □□□090C12	684
	54	1.6	66	1.6	96	1.4	184	26.353	GKS05-3M □□□090C12	684
	50	0.9	60	0.9			200	28.727	GKS04-3M □□□090C12	684
	48	1.6	58	1.5	85	1.3	209	29.931	GKS05-3M □□□090C12	684
	45	2.7	54	2.6	79	2.3	224	32.063	GKS06-3M □□□090C12	684
	44	1.5	53	1.4	78	1.2	229	32.744	GKS05-3M □□□090C12	684
	39	1.2	47	1.1	69	1.0	257	36.894	GKS05-3M □□□090C12	684
	39	2.7	48	2.6	70	2.3	253	36.303	GKS06-3M □□□090C12	684
	34	1.1	41	1.1	61	1.0	291	41.765	GKS05-3M □□□090C12	684
	32	2.2	39	2.2	57	2.1	310	44.471	GKS06-3M □□□090C12	684
	30	0.9	37	0.9	54	0.9	328	47.059	GKS05-3M □□□090C12	684
	28	0.9	34	0.9	50	0.9	357	51.162	GKS05-3M □□□090C12	684
	27	1.9	33	1.9	48	1.8	370	53.074	GKS06-3M □□□090C12	684
	25	1.7	30	1.7	44	1.6	404	57.882	GKS06-3M □□□090C12	684
	22	1.4	27	1.4	39	1.3	455	65.207	GKS06-3M □□□090C12	684
	22	2.6	27	2.6	39	2.5	452	64.790	GKS07-3M □□□090C12	684
	20	1.4	24	1.4	35	1.3	502	72.000	GKS06-3M □□□090C12	684
	20	2.7	25	2.7	36	2.6	492	70.474	GKS07-3M □□□090C12	684
	18	1.1	21	1.1	31	1.1	566	81.111	GKS06-3M □□□090C12	684

50 Hz: P_N=1.1 kW
60 Hz: P_N=1.3 kW
87 Hz: P_N=2.0 kW

n_N	1430 r/min		1730 r/min		2540 r/min		M_2 [Nm]	i		
f_N	50 Hz		60 Hz		87 Hz					
P_N	1.1 kW		1.3 kW		2.0 kW					
	n_2 [r/min]	c	n_2 [r/min]	c	n_2 [r/min]	c				
	18	2.2	22	2.2	32	2.1	554	79.407	GKS07-3M □□□090C12	684
	15	1.1	19	1.1	27	1.0	650	93.176	GKS06-3M □□□090C12	684
	15	2.1	19	2.1	27	2.0	646	92.563	GKS07-3M □□□090C12	684
	14	0.9	17	0.9	24	0.8	732	104.967	GKS06-3M □□□090C12	684
	14	1.0	17	1.0	25	0.9	711	103.721	GKS06-4M □□□090C12	692
	14	1.7	17	1.7	24	1.6	728	104.296	GKS07-3M □□□090C12	684
	14	1.8	17	1.8	25	1.7	707	103.039	GKS07-4M □□□090C12	692
	13	0.9	15	0.9	23	0.9	789	113.082	GKS06-3M □□□090C12	684
	13	1.4	15	1.4	23	1.4	771	112.391	GKS07-4M □□□090C12	692
	13	1.7	15	1.7	23	1.7	784	112.338	GKS07-3M □□□090C12	684
	11	1.4	14	1.4	20	1.4	883	126.578	GKS07-3M □□□090C12	684
	11	1.5	14	1.5	20	1.5	866	126.222	GKS07-4M □□□090C12	692
	10	1.1	13	1.1	18	1.1	945	137.748	GKS07-4M □□□090C12	692
	10	1.4	12	1.4	18	1.4	981	140.548	GKS07-3M □□□090C12	684
	10	2.7	12	2.7	18	2.7	983	140.921	GKS09-3M □□□090C12	684
	10	3.2	13	3.2	18	3.2	953	138.929	GKS09-4M □□□090C12	692
	9.5	2.9	12	2.9	17	2.9	1036	151.012	GKS09-4M □□□090C12	692
	9.3	1.2	11	1.2	16	1.2	1061	154.622	GKS07-4M □□□090C12	692
	9	1.1	11	1.1	16	1.1	1105	158.364	GKS07-3M □□□090C12	684
	9	2.7	11	2.7	16	2.7	1108	158.816	GKS09-3M □□□090C12	684
	8.4	2.6	10	2.6	15	2.6	1167	170.188	GKS09-4M □□□090C12	692
	8	0.9	9.7	0.9	14	0.9	1229	179.201	GKS07-4M □□□090C12	692
	7.9	2.4	9.5	2.4	14	2.4	1270	182.000	GKS09-3M □□□090C12	684
	7.8	1.0	9.4	1.0	14	1.0	1288	184.600	GKS07-3M □□□090C12	684
	7.1	1.0	8.6	1.0	13	1.0	1380	201.254	GKS07-4M □□□090C12	692
	7	2.2	8.4	2.2	12	2.2	1431	205.111	GKS09-3M □□□090C12	684
	7	2.2	8.5	2.2	12	2.2	1403	204.596	GKS09-4M □□□090C12	692
	6.9	0.8	8.3	0.8	12	0.8	1451	208.000	GKS07-3M □□□090C12	684
	6.5	2.0	7.8	2.0	12	2.0	1541	220.882	GKS09-3M □□□090C12	684
	6.4	0.9	7.7	0.9	11	0.9	1563	224.037	GKS07-3M □□□090C12	684
	6.2	1.9	7.5	1.9	11	1.9	1582	230.577	GKS09-4M □□□090C12	692
	5.8	1.8	7	1.8	10	1.8	1704	248.439	GKS09-4M □□□090C12	692
	5.7	1.8	7	1.8	10	1.8	1737	248.930	GKS09-3M □□□090C12	684
	5.1	1.6	6.2	1.6	9.1	1.6	1948	279.205	GKS09-3M □□□090C12	684
	5.1	1.6	6.2	1.6	9.1	1.6	1920	279.986	GKS09-4M □□□090C12	692
	4.5	1.4	5.5	1.4	8.1	1.4	2196	314.659	GKS09-3M □□□090C12	684
	4.4	1.4	5.4	1.4	7.9	1.4	2218	323.365	GKS09-4M □□□090C12	692
	4.4	2.7	5.4	2.7	7.9	2.7	2215	322.931	GKS11-4M □□□090C12	692
	3.9	1.2	4.8	1.2	7	1.2	2500	364.427	GKS09-4M □□□090C12	692
	3.9	2.4	4.8	2.4	7	2.4	2496	363.866	GKS11-4M □□□090C12	692
	3.6	1.1	4.3	1.1	6.3	1.1	2759	402.234	GKS09-4M □□□090C12	692

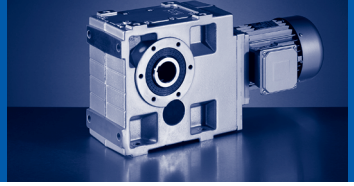

50 Hz: P_N=1.1 kW
60 Hz: P_N=1.3 kW
87 Hz: P_N=2.0 kW

n_N	1430 r/min		1730 r/min		2540 r/min		M_2 [Nm]	i		
f_N	50 Hz		60 Hz		87 Hz					
P_N	1.1 kW		1.3 kW		2.0 kW					
	n_2 [r/min]	c	n_2 [r/min]	c	n_2 [r/min]	c				
	3.6	2.2	4.4	2.2	6.4	2.2	2715	395.787	GKS11-4M □□□090C12	692
	3.2	1.0	3.8	1.0	5.6	1.0	3109	453.311	GKS09-4M □□□090C12	692
	3.2	2.0	3.9	2.0	5.7	2.0	3059	445.958	GKS11-4M □□□090C12	692
	2.8	0.9	3.3	0.9	4.9	0.9	3570	520.538	GKS09-4M □□□090C12	692
	2.8	1.7	3.4	1.7	5	1.7	3513	512.196	GKS11-4M □□□090C12	692
	2.5	1.5	3	1.5	4.4	1.5	3958	577.122	GKS11-4M □□□090C12	692
	2.3	1.4	2.8	1.4	4.1	1.4	4264	621.619	GKS11-4M □□□090C12	692
	2	1.3	2.5	1.3	3.6	1.3	4804	700.416	GKS11-4M □□□090C12	692
	1.8	1.1	2.1	1.1	3.1	1.1	5600	816.455	GKS11-4M □□□090C12	692
	1.8	2.1	2.2	2.1	3.2	2.1	5527	805.901	GKS14-4M □□□090C12	692
	1.6	1.0	1.9	1.0	2.8	1.0	6310	919.949	GKS11-4M □□□090C12	692
	1.6	1.9	1.9	1.9	2.8	1.9	6228	908.058	GKS14-4M □□□090C12	692
	1.5	1.7	1.8	1.7	2.6	1.7	6708	978.071	GKS14-4M □□□090C12	692
	1.4	0.9	1.8	0.9	2.6	0.9	6796	990.879	GKS11-4M □□□090C12	692
	1.3	1.5	1.6	1.5	2.3	1.5	7559	1102.052	GKS14-4M □□□090C12	692
	1.2	1.4	1.4	1.4	2.1	1.4	8480	1236.326	GKS14-4M □□□090C12	692
	1	1.2	1.2	1.2	1.8	1.2	9555	1393.043	GKS14-4M □□□090C12	692

50 Hz: P_N=1.5 kW
60 Hz: P_N=1.8 kW
87 Hz: P_N=2.7 kW

n_N	1435 r/min		1735 r/min		2545 r/min		M_2 [Nm]	i		
f_N	50 Hz		60 Hz		87 Hz					
P_N	1.5 kW		1.8 kW		2.7 kW					
	n_2 [r/min]	c	n_2 [r/min]	c	n_2 [r/min]	c				
	280	1.7	339	1.6	497	1.4	49	5.123	GKS04-3M □□□090C32	684
	209	2.3	253	2.2	371	1.9	65	6.863	GKS05-3M □□□090C32	684
	204	1.4	247	1.3	362	1.2	67	7.025	GKS04-3M □□□090C32	684
	176	1.7	212	1.6	312	1.4	77	8.167	GKS04-3M □□□090C32	684
	160	1.2	193	1.2	283	1.0	85	8.991	GKS04-3M □□□090C32	684
	153	1.9	184	1.8	270	1.6	89	9.412	GKS05-3M □□□090C32	684
	146	1.1	176	1.1	259	1.0	93	9.836	GKS04-3M □□□090C32	684
	136	2.3	164	2.2	241	1.9	100	10.569	GKS05-3M □□□090C32	684
	126	3.1	152	2.9	224	2.6	108	11.382	GKS06-3M □□□090C32	684
	123	2.3	149	2.2	218	1.9	111	11.667	GKS05-3M □□□090C32	684
	122	1.6	148	1.5	217	1.4	111	11.730	GKS04-3M □□□090C32	684
	110	1.3	133	1.3	195	1.1	124	13.067	GKS04-3M □□□090C32	684
	109	1.3	132	1.3	193	1.1	125	13.176	GKS05-3M □□□090C32	684
	100	1.2	121	1.2	178	1.0	136	14.333	GKS04-3M □□□090C32	684
	99	1.9	120	1.8	176	1.6	137	14.494	GKS05-3M □□□090C32	684
	90	1.9	108	1.8	159	1.6	152	16.000	GKS05-3M □□□090C32	684
	89	1.2	108	1.1	158	1.0	153	16.087	GKS04-3M □□□090C32	684
	84	1.9	102	1.9	149	1.6	162	17.054	GKS05-3M □□□090C32	684
	81	3.1	97	2.9	143	2.6	169	17.809	GKS06-3M □□□090C32	684
	80	1.0	97	0.9	142	0.8	170	17.920	GKS04-3M □□□090C32	684
	75	1.6	90	1.6	132	1.4	182	19.216	GKS05-3M □□□090C32	684
	70	0.9	84	0.9			195	20.588	GKS04-3M □□□090C32	684
	64	0.9	77	0.8			214	22.522	GKS04-3M □□□090C32	684
	61	1.5	74	1.4	109	1.2	222	23.388	GKS05-3M □□□090C32	684
	55	1.2	66	1.1	97	1.0	250	26.353	GKS05-3M □□□090C32	684
	55	2.8	67	2.6	98	2.3	247	26.017	GKS06-3M □□□090C32	684
	50	2.5	61	2.4	89	2.1	270	28.461	GKS06-3M □□□090C32	684
	48	1.2	58	1.1	85	1.0	284	29.931	GKS05-3M □□□090C32	684
	45	2.0	54	1.9	79	1.7	304	32.063	GKS06-3M □□□090C32	684
	44	1.1	53	1.0	78	0.9	311	32.744	GKS05-3M □□□090C32	684
	40	2.0	48	1.9	70	1.7	344	36.303	GKS06-3M □□□090C32	684
	39	0.9	47	0.8			350	36.894	GKS05-3M □□□090C32	684
	34	0.8					396	41.765	GKS05-3M □□□090C32	684
	32	1.6	39	1.6	57	1.6	422	44.471	GKS06-3M □□□090C32	684
	27	1.4	33	1.4	48	1.3	503	53.074	GKS06-3M □□□090C32	684
	25	1.3	30	1.3	44	1.2	549	57.882	GKS06-3M □□□090C32	684
	25	2.4	30	2.4	44	2.3	545	57.501	GKS07-3M □□□090C32	684
	22	1.0	27	1.0	39	1.0	618	65.207	GKS06-3M □□□090C32	684
	22	2.0	27	2.0	39	1.9	614	64.790	GKS07-3M □□□090C32	684
	20	1.0	24	1.0	35	1.0	683	72.000	GKS06-3M □□□090C32	684
	20	2.0	25	2.0	36	1.9	668	70.474	GKS07-3M □□□090C32	684

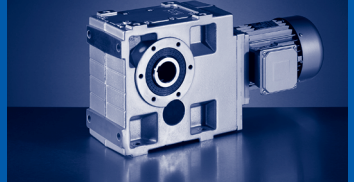

50 Hz: P_N=1.5 kW
60 Hz: P_N=1.8 kW
87 Hz: P_N=2.7 kW

n_N	1435 r/min		1735 r/min		2545 r/min		M_2 [Nm]	i		
f_N	50 Hz		60 Hz		87 Hz					
P_N	1.5 kW		1.8 kW		2.7 kW					
	n_2 [r/min]	c	n_2 [r/min]	c	n_2 [r/min]	c				
	18	0.8	21	0.8			769	81.111	GKS06-3M □□□090C32	684
	18	1.6	22	1.6	32	1.5	753	79.407	GKS07-3M □□□090C32	684
	16	1.5	19	1.5	28	1.4	878	92.563	GKS07-3M □□□090C32	684
	16	2.9	19	2.9	28	2.8	871	91.860	GKS09-3M □□□090C32	684
	14	1.2	17	1.2	24	1.2	989	104.296	GKS07-3M □□□090C32	684
	14	1.3	17	1.3	25	1.3	960	103.039	GKS07-4M □□□090C32	692
	14	2.9	17	2.9	25	2.8	982	103.524	GKS09-3M □□□090C32	684
	14	3.2	17	3.2	25	3.1	937	100.551	GKS09-4M □□□090C32	692
	13	1.0	15	1.0	23	1.0	1048	112.391	GKS07-4M □□□090C32	692
	13	1.3	15	1.3	23	1.3	1065	112.338	GKS07-3M □□□090C32	684
	13	2.6	16	2.6	23	2.6	1057	111.484	GKS09-3M □□□090C32	684
	13	2.8	15	2.8	23	2.8	1056	113.320	GKS09-4M □□□090C32	692
	12	2.6	14	2.6	21	2.6	1149	123.275	GKS09-4M □□□090C32	692
	11	1.0	14	1.0	20	1.0	1200	126.578	GKS07-3M □□□090C32	684
	11	1.1	14	1.1	20	1.1	1176	126.222	GKS07-4M □□□090C32	692
	11	2.6	14	2.6	20	2.6	1191	125.641	GKS09-3M □□□090C32	684
	10	0.8	13	0.8	19	0.8	1284	137.748	GKS07-4M □□□090C32	692
	10	1.0	12	1.0	18	1.0	1333	140.548	GKS07-3M □□□090C32	684
	10	2.0	12	2.0	18	2.0	1336	140.921	GKS09-3M □□□090C32	684
	10	2.3	13	2.3	18	2.3	1295	138.929	GKS09-4M □□□090C32	692
	9.5	2.2	12	2.2	17	2.2	1408	151.012	GKS09-4M □□□090C32	692
	9.3	0.9	11	0.9	17	0.9	1441	154.622	GKS07-4M □□□090C32	692
	9.1	0.8	11	0.8	16	0.8	1502	158.364	GKS07-3M □□□090C32	684
	9	2.0	11	2.0	16	2.0	1506	158.816	GKS09-3M □□□090C32	684
	8.4	1.9	10	1.9	15	1.9	1586	170.188	GKS09-4M □□□090C32	692
	7.9	1.8	9.5	1.8	14	1.8	1726	182.000	GKS09-3M □□□090C32	684
	7	1.6	8.5	1.6	12	1.6	1907	204.596	GKS09-4M □□□090C32	692
	7	1.6	8.5	1.6	12	1.6	1945	205.111	GKS09-3M □□□090C32	684
	6.5	1.5	7.9	1.5	12	1.5	2094	220.882	GKS09-3M □□□090C32	684
	6.2	1.4	7.5	1.4	11	1.4	2149	230.577	GKS09-4M □□□090C32	692
	5.8	1.3	7	1.3	10	1.3	2316	248.439	GKS09-4M □□□090C32	692
	5.8	1.3	7	1.3	10	1.3	2360	248.930	GKS09-3M □□□090C32	684
	5.1	1.1	6.2	1.1	9.1	1.1	2647	279.205	GKS09-3M □□□090C32	684
	5.1	1.2	6.2	1.2	9.1	1.2	2610	279.986	GKS09-4M □□□090C32	692
	4.6	1.0	5.5	1.0	8.1	1.0	2983	314.659	GKS09-3M □□□090C32	684
	4.4	1.0	5.4	1.0	7.9	1.0	3014	323.365	GKS09-4M □□□090C32	692
	4.4	2.0	5.4	2.0	7.9	2.0	3010	322.931	GKS11-4M □□□090C32	692
	3.9	0.9	4.8	0.9	7	0.9	3397	364.427	GKS09-4M □□□090C32	692
	3.9	1.8	4.8	1.8	7	1.8	3391	363.866	GKS11-4M □□□090C32	692
	3.6	0.8	4.3	0.8	6.3	0.8	3749	402.234	GKS09-4M □□□090C32	692
	3.6	1.6	4.4	1.6	6.4	1.6	3689	395.787	GKS11-4M □□□090C32	692

50 Hz: P_N=1.5 kW
60 Hz: P_N=1.8 kW
87 Hz: P_N=2.7 kW

n_N	1435 r/min		1735 r/min		2545 r/min		M_2 [Nm]	i		
f_N	50 Hz		60 Hz		87 Hz					
P_N	1.5 kW		1.8 kW		2.7 kW					
	n_2 [r/min]	c	n_2 [r/min]	c	n_2 [r/min]	c				
	3.2	1.5	3.9	1.5	5.7	1.5	4156	445.958	GKS11-4M □□□090C32	692
	2.8	1.3	3.4	1.3	5	1.3	4774	512.196	GKS11-4M □□□090C32	692
	2.5	1.1	3	1.1	4.4	1.1	5379	577.122	GKS11-4M □□□090C32	692
	2.3	1.0	2.8	1.0	4.1	1.0	5794	621.619	GKS11-4M □□□090C32	692
	2.1	0.9	2.5	0.9	3.6	0.9	6528	700.416	GKS11-4M □□□090C32	692
	1.8	1.5	2.2	1.5	3.2	1.5	7511	805.901	GKS14-4M □□□090C32	692
	1.6	1.4	1.9	1.4	2.8	1.4	8463	908.058	GKS14-4M □□□090C32	692
	1.5	1.3	1.8	1.3	2.6	1.3	9116	978.071	GKS14-4M □□□090C32	692
	1.3	1.1	1.6	1.1	2.3	1.1	10271	1102.052	GKS14-4M □□□090C32	692
	1.2	1.0	1.4	1.0	2.1	1.0	11523	1236.326	GKS14-4M □□□090C32	692
	1	0.9	1.3	0.9	1.8	0.9	12983	1393.043	GKS14-4M □□□090C32	692

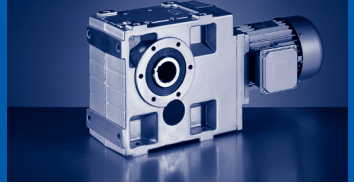

50 Hz: P_N=2.2 kW
60 Hz: P_N=2.6 kW
87 Hz: P_N=3.9 kW

n_N	1445 r/min		1745 r/min		2555 r/min		M_2 [Nm]	i		
f_N	50 Hz		60 Hz		87 Hz					
P_N	2.2 kW		2.6 kW		3.9 kW					
	n_2 [r/min]	c	n_2 [r/min]	c	n_2 [r/min]	c				
	223	2.9	269	2.8	394	2.5	90	6.485	GKS06-3M □□□100C12	684
	211	1.6	254	1.5	372	1.3	95	6.863	GKS05-3M □□□100C12	684
	157	2.9	190	2.8	278	2.5	127	9.196	GKS06-3M □□□100C12	684
	154	1.3	185	1.2	272	1.1	130	9.412	GKS05-3M □□□100C12	684
	142	2.9	172	2.8	252	2.5	140	10.147	GKS06-3M □□□100C12	684
	137	1.6	165	1.5	242	1.3	146	10.569	GKS05-3M □□□100C12	684
	127	2.1	153	2.0	225	1.8	157	11.382	GKS06-3M □□□100C12	684
	124	1.6	150	1.5	219	1.3	161	11.667	GKS05-3M □□□100C12	684
	115	2.5	138	2.3	203	2.1	174	12.612	GKS06-3M □□□100C12	684
	110	0.9	132	0.9			182	13.176	GKS05-3M □□□100C12	684
	100	1.3	120	1.2	176	1.1	200	14.494	GKS05-3M □□□100C12	684
	98	2.9	118	2.8	172	2.5	205	14.824	GKS06-3M □□□100C12	684
	90	1.3	109	1.2	160	1.1	221	16.000	GKS05-3M □□□100C12	684
	87	2.6	105	2.5	153	2.2	231	16.699	GKS06-3M □□□100C12	684
	85	1.3	102	1.3	150	1.1	236	17.054	GKS05-3M □□□100C12	684
	81	2.1	98	2.0	144	1.8	246	17.809	GKS06-3M □□□100C12	684
	75	1.1	91	1.1	133	0.9	265	19.216	GKS05-3M □□□100C12	684
	71	2.4	86	2.3	126	2.0	281	20.329	GKS06-3M □□□100C12	684
	63	1.9	76	1.8	112	1.6	316	22.902	GKS06-3M □□□100C12	684
	62	1.0	75	1.0	109	0.9	323	23.388	GKS05-3M □□□100C12	684
	56	1.9	67	1.8	98	1.6	359	26.017	GKS06-3M □□□100C12	684
	55	0.8					364	26.353	GKS05-3M □□□100C12	684
	51	1.7	61	1.7	90	1.5	393	28.461	GKS06-3M □□□100C12	684
	51	3.1	62	2.9	90	2.6	391	28.274	GKS07-3M □□□100C12	684
	45	1.4	54	1.3	80	1.2	443	32.063	GKS06-3M □□□100C12	684
	45	2.7	55	2.5	80	2.2	440	31.858	GKS07-3M □□□100C12	684
	40	1.4	48	1.3	70	1.1	501	36.303	GKS06-3M □□□100C12	684
	40	2.6	48	2.5	71	2.2	498	36.063	GKS07-3M □□□100C12	684
	35	1.2	42	1.1	62	1.0	573	41.472	GKS06-3M □□□100C12	684
	33	1.1	39	1.1	58	1.1	614	44.471	GKS06-3M □□□100C12	684
	33	2.1	40	2.1	58	2.0	610	44.178	GKS07-3M □□□100C12	684
	29	1.9	35	1.9	51	1.8	695	50.345	GKS07-3M □□□100C12	684
	27	1.0	33	1.0	48	0.9	733	53.074	GKS06-3M □□□100C12	684
	25	0.9	30	0.9	44	0.8	799	57.882	GKS06-3M □□□100C12	684
	25	1.7	30	1.7	44	1.6	794	57.501	GKS07-3M □□□100C12	684
	22	1.3	27	1.3	39	1.3	895	64.790	GKS07-3M □□□100C12	684
	21	1.4	25	1.4	36	1.3	973	70.474	GKS07-3M □□□100C12	684
	20	3.1	25	3.1	36	2.9	980	70.982	GKS09-3M □□□100C12	684
	18	1.1	22	1.1	32	1.1	1097	79.407	GKS07-3M □□□100C12	684
	18	2.8	22	2.8	32	2.6	1105	79.996	GKS09-3M □□□100C12	684
	16	1.0	19	1.0	28	1.0	1278	92.563	GKS07-3M □□□100C12	684

50 Hz: P_N=2.2 kW
60 Hz: P_N=2.6 kW
87 Hz: P_N=3.9 kW

n_N	1445 r/min		1745 r/min		2555 r/min		M_2 [Nm]	i		
f_N	50 Hz		60 Hz		87 Hz					
P_N	2.2 kW		2.6 kW		3.9 kW					
	n_2 [r/min]	c	n_2 [r/min]	c	n_2 [r/min]	c				
	16	2.4	19	2.4	28	2.3	1269	91.860	GKS09-3M □□□100C12	684
	14	0.8	17	0.8	25	0.8	1440	104.296	GKS07-3M □□□100C12	684
	14	0.9	17	0.9	25	0.9	1399	103.039	GKS07-4M □□□100C12	692
	14	2.2	17	2.2	25	2.1	1430	103.524	GKS09-3M □□□100C12	684
	14	2.2	17	2.2	25	2.1	1365	100.551	GKS09-4M □□□100C12	692
	13	0.9	16	0.9	23	0.9	1551	112.338	GKS07-3M □□□100C12	684
	13	2.0	16	2.0	23	2.0	1540	111.484	GKS09-3M □□□100C12	684
	13	2.0	15	2.0	23	2.0	1538	113.320	GKS09-4M □□□100C12	692
	13	2.9	16	2.9	23	2.9	1538	111.335	GKS11-3M □□□100C12	684
	12	1.8	14	1.8	20	1.8	1735	125.641	GKS09-3M □□□100C12	684
	12	1.8	14	1.8	21	1.8	1674	123.275	GKS09-4M □□□100C12	692
	12	2.9	14	2.9	20	2.9	1732	125.448	GKS11-3M □□□100C12	684
	10	1.5	12	1.5	18	1.5	1946	140.921	GKS09-3M □□□100C12	684
	10	1.6	13	1.6	18	1.6	1886	138.929	GKS09-4M □□□100C12	692
	10	2.3	12	2.3	18	2.3	1944	140.732	GKS11-3M □□□100C12	684
	10	3.1	12	3.1	18	3.1	1913	140.952	GKS11-4M □□□100C12	692
	9.6	1.5	12	1.5	17	1.5	2050	151.012	GKS09-4M □□□100C12	692
	9.4	2.8	11	2.8	17	2.8	2080	153.242	GKS11-4M □□□100C12	692
	9.1	1.4	11	1.4	16	1.4	2193	158.816	GKS09-3M □□□100C12	684
	9.1	2.3	11	2.3	16	2.3	2190	158.571	GKS11-3M □□□100C12	684
	8.5	1.3	10	1.3	15	1.3	2310	170.188	GKS09-4M □□□100C12	692
	8.4	2.5	10	2.5	15	2.5	2344	172.667	GKS11-4M □□□100C12	692
	7.9	1.2	9.6	1.2	14	1.2	2513	182.000	GKS09-3M □□□100C12	684
	7.7	2.3	9.4	2.3	14	2.3	2577	186.572	GKS11-3M □□□100C12	684
	7.2	2.2	8.6	2.2	13	2.2	2741	201.890	GKS11-4M □□□100C12	692
	7.1	1.1	8.5	1.1	13	1.1	2777	204.596	GKS09-4M □□□100C12	692
	7	1.1	8.5	1.1	13	1.1	2833	205.111	GKS09-3M □□□100C12	684
	6.9	2.0	8.3	2.0	12	2.0	2903	210.222	GKS11-3M □□□100C12	684
	6.5	1.0	7.9	1.0	12	1.0	3050	220.882	GKS09-3M □□□100C12	684
	6.4	1.9	7.7	1.9	11	1.9	3127	226.431	GKS11-3M □□□100C12	684
	6.4	1.9	7.7	1.9	11	1.9	3088	227.481	GKS11-4M □□□100C12	692
	6.3	1.0	7.6	1.0	11	1.0	3130	230.577	GKS09-4M □□□100C12	692
	5.8	0.9	7	0.9	10	0.9	3438	248.930	GKS09-3M □□□100C12	684
	5.8	0.9	7	0.9	10	0.9	3373	248.439	GKS09-4M □□□100C12	692
	5.8	1.8	7	1.8	10	1.8	3368	248.106	GKS11-4M □□□100C12	692
	5.7	1.7	6.8	1.7	10	1.7	3523	255.133	GKS11-3M □□□100C12	684
	5.2	0.8	6.2	0.8	9.1	0.8	3801	279.986	GKS09-4M □□□100C12	692
	5.2	1.6	6.2	1.6	9.1	1.6	3795	279.556	GKS11-4M □□□100C12	692
	5.1	1.5	6.1	1.5	8.9	1.5	3953	286.219	GKS11-3M □□□100C12	684
	4.5	1.3	5.4	1.3	7.9	1.3	4454	322.500	GKS11-3M □□□100C12	684
	4.5	1.4	5.4	1.4	7.9	1.4	4384	322.931	GKS11-4M □□□100C12	692

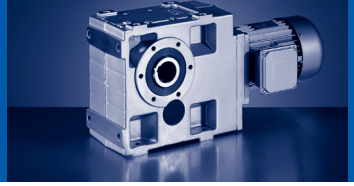

50 Hz: P_N=2.2 kW
60 Hz: P_N=2.6 kW
87 Hz: P_N=3.9 kW

n_N	1445 r/min		1745 r/min		2555 r/min		M_2 [Nm]	i		
f_N	50 Hz		60 Hz		87 Hz					
P_N	2.2 kW		2.6 kW		3.9 kW					
	n_2 [r/min]	c	n_2 [r/min]	c	n_2 [r/min]	c				
	4.5	2.6	5.4	2.6	7.9	2.6	4368	321.729	GKS14-4M □□□100C12	692
	4	1.2	4.8	1.2	7	1.2	4940	363.866	GKS11-4M □□□100C12	692
	4	2.3	4.8	2.3	7.1	2.3	4921	362.512	GKS14-4M □□□100C12	692
	3.7	1.1	4.4	1.1	6.5	1.1	5373	395.787	GKS11-4M □□□100C12	692
	3.7	2.2	4.5	2.2	6.5	2.2	5303	390.671	GKS14-4M □□□100C12	692
	3.3	1.9	4	1.9	5.8	1.9	5976	440.193	GKS14-4M □□□100C12	692
	3.2	1.0	3.9	1.0	5.7	1.0	6054	445.958	GKS11-4M □□□100C12	692
	2.8	0.9	3.4	0.9	5	0.9	6953	512.196	GKS11-4M □□□100C12	692
	2.8	1.7	3.4	1.7	5	1.7	6966	513.121	GKS14-4M □□□100C12	692
	2.5	1.5	3	1.5	4.4	1.5	7849	578.164	GKS14-4M □□□100C12	692
	2.3	1.4	2.8	1.4	4.1	1.4	8454	622.742	GKS14-4M □□□100C12	692
	2.1	1.2	2.5	1.2	3.6	1.2	9525	701.681	GKS14-4M □□□100C12	692
	1.8	1.1	2.2	1.1	3.2	1.1	10940	805.901	GKS14-4M □□□100C12	692
	1.6	0.9	1.9	0.9	2.8	0.9	12327	908.058	GKS14-4M □□□100C12	692
	1.5	0.9	1.8	0.9	2.6	0.9	13277	978.071	GKS14-4M □□□100C12	692

50 Hz: P_N=3.0 kW
60 Hz: P_N=3.6 kW
87 Hz: P_N=5.4 kW

n_N	1445 r/min		1745 r/min		2555 r/min		M_2 [Nm]	i		
f_N	50 Hz		60 Hz		87 Hz					
P_N	3.0 kW		3.6 kW		5.4 kW					
	n_2 [r/min]	c	n_2 [r/min]	c	n_2 [r/min]	c				
	223	2.2	269	2.1	394	1.8	122	6.485	GKS06-3M □□□100C32	684
	211	1.1	254	1.1	372	1.0	129	6.863	GKS05-3M □□□100C32	684
	157	2.2	190	2.1	278	1.8	173	9.196	GKS06-3M □□□100C32	684
	154	0.9	185	0.9			177	9.412	GKS05-3M □□□100C32	684
	142	2.2	172	2.1	252	1.8	191	10.147	GKS06-3M □□□100C32	684
	137	1.1	165	1.1	242	1.0	199	10.569	GKS05-3M □□□100C32	684
	127	1.6	153	1.5	225	1.3	214	11.382	GKS06-3M □□□100C32	684
	127	2.9	153	2.7	225	2.4	214	11.378	GKS07-3M □□□100C32	684
	124	1.1	150	1.1	219	1.0	220	11.667	GKS05-3M □□□100C32	684
	115	1.8	138	1.7	203	1.5	238	12.612	GKS06-3M □□□100C32	684
	100	0.9	120	0.9			273	14.494	GKS05-3M □□□100C32	684
	98	2.2	118	2.0	172	1.8	279	14.824	GKS06-3M □□□100C32	684
	90	0.9	109	0.9			301	16.000	GKS05-3M □□□100C32	684
	87	1.9	105	1.8	153	1.6	315	16.699	GKS06-3M □□□100C32	684
	85	1.0	102	0.9	150	0.8	321	17.054	GKS05-3M □□□100C32	684
	84	3.1	101	2.9	148	2.6	325	17.270	GKS07-3M □□□100C32	684
	81	1.6	98	1.5	144	1.3	335	17.809	GKS06-3M □□□100C32	684
	75	0.8					362	19.216	GKS05-3M □□□100C32	684
	71	1.7	86	1.7	126	1.5	383	20.329	GKS06-3M □□□100C32	684
	63	1.4	76	1.3	112	1.2	431	22.902	GKS06-3M □□□100C32	684
	57	2.5	69	2.4	101	2.1	475	25.244	GKS07-3M □□□100C32	684
	56	1.4	67	1.3	98	1.2	490	26.017	GKS06-3M □□□100C32	684
	51	1.3	61	1.2	90	1.1	536	28.461	GKS06-3M □□□100C32	684
	51	2.3	62	2.2	90	1.9	532	28.274	GKS07-3M □□□100C32	684
	45	1.0	54	1.0	80	0.9	604	32.063	GKS06-3M □□□100C32	684
	45	2.0	55	1.9	80	1.6	600	31.858	GKS07-3M □□□100C32	684
	40	1.0	48	1.0	70	0.8	684	36.303	GKS06-3M □□□100C32	684
	40	1.9	48	1.8	71	1.6	679	36.063	GKS07-3M □□□100C32	684
	35	0.9	42	0.8			781	41.472	GKS06-3M □□□100C32	684
	33	0.8	39	0.8			837	44.471	GKS06-3M □□□100C32	684
	33	1.6	40	1.6	58	1.5	832	44.178	GKS07-3M □□□100C32	684
	29	1.4	35	1.4	51	1.3	948	50.345	GKS07-3M □□□100C32	684
	25	1.2	30	1.2	44	1.2	1083	57.501	GKS07-3M □□□100C32	684
	25	2.8	30	2.8	44	2.6	1101	58.456	GKS09-3M □□□100C32	684
	22	1.0	27	1.0	39	0.9	1220	64.790	GKS07-3M □□□100C32	684
	22	2.5	27	2.5	39	2.3	1241	65.879	GKS09-3M □□□100C32	684
	21	1.0	25	1.0	36	1.0	1327	70.474	GKS07-3M □□□100C32	684
	20	2.3	25	2.3	36	2.2	1337	70.982	GKS09-3M □□□100C32	684
	18	0.8	22	0.8			1495	79.407	GKS07-3M □□□100C32	684
	18	2.0	22	2.0	32	1.9	1506	79.996	GKS09-3M □□□100C32	684
	16	1.8	19	1.8	28	1.7	1730	91.860	GKS09-3M □□□100C32	684

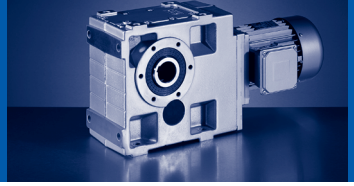

50 Hz: P_N=3.0 kW
60 Hz: P_N=3.6 kW
87 Hz: P_N=5.4 kW

n_N	1445 r/min		1745 r/min		2555 r/min		M_2 [Nm]	i		
f_N	50 Hz		60 Hz		87 Hz					
P_N	3.0 kW		3.6 kW		5.4 kW					
	n_2 [r/min]	c	n_2 [r/min]	c	n_2 [r/min]	c				
	16	2.5	19	2.5	28	2.4	1728	91.737	GKS11-3M □□□100C32	684
	14	1.6	17	1.6	25	1.5	1950	103.524	GKS09-3M □□□100C32	684
	14	1.6	17	1.6	25	1.6	1861	100.551	GKS09-4M □□□100C32	692
	14	2.5	17	2.5	25	2.4	1947	103.365	GKS11-3M □□□100C32	684
	14	3.0	17	3.0	25	2.9	1890	102.119	GKS11-4M □□□100C32	692
	13	1.4	16	1.4	23	1.4	2099	111.484	GKS09-3M □□□100C32	684
	13	1.4	15	1.4	23	1.4	2098	113.320	GKS09-4M □□□100C32	692
	13	2.1	16	2.1	23	2.1	2097	111.335	GKS11-3M □□□100C32	684
	13	2.8	15	2.8	22	2.8	2130	115.063	GKS11-4M □□□100C32	692
	12	1.3	14	1.3	20	1.3	2366	125.641	GKS09-3M □□□100C32	684
	12	1.3	14	1.3	21	1.3	2282	123.275	GKS09-4M □□□100C32	692
	12	2.1	14	2.1	20	2.1	2362	125.448	GKS11-3M □□□100C32	684
	12	2.5	14	2.5	20	2.5	2316	125.095	GKS11-4M □□□100C32	692
	10	1.1	12	1.1	18	1.1	2654	140.921	GKS09-3M □□□100C32	684
	10	1.2	13	1.2	18	1.2	2572	138.929	GKS09-4M □□□100C32	692
	10	1.7	12	1.7	18	1.7	2650	140.732	GKS11-3M □□□100C32	684
	10	2.3	12	2.3	18	2.3	2609	140.952	GKS11-4M □□□100C32	692
	9.6	1.1	12	1.1	17	1.1	2795	151.012	GKS09-4M □□□100C32	692
	9.4	2.0	11	2.0	17	2.0	2837	153.242	GKS11-4M □□□100C32	692
	9.1	1.0	11	1.0	16	1.0	2991	158.816	GKS09-3M □□□100C32	684
	9.1	1.7	11	1.7	16	1.7	2986	158.571	GKS11-3M □□□100C32	684
	8.5	1.0	10	1.0	15	1.0	3150	170.188	GKS09-4M □□□100C32	692
	8.4	1.9	10	1.9	15	1.9	3196	172.667	GKS11-4M □□□100C32	692
	7.9	0.9	9.6	0.9	14	0.9	3427	182.000	GKS09-3M □□□100C32	684
	7.7	1.7	9.4	1.7	14	1.7	3513	186.572	GKS11-3M □□□100C32	684
	7.2	1.6	8.6	1.6	13	1.6	3737	201.890	GKS11-4M □□□100C32	692
	7.1	0.8	8.5	0.8	13	0.8	3787	204.596	GKS09-4M □□□100C32	692
	6.9	1.5	8.3	1.5	12	1.5	3959	210.222	GKS11-3M □□□100C32	684
	6.4	1.4	7.7	1.4	11	1.4	4264	226.431	GKS11-3M □□□100C32	684
	6.4	1.4	7.7	1.4	11	1.4	4211	227.481	GKS11-4M □□□100C32	692
	5.8	1.3	7	1.3	10	1.3	4593	248.106	GKS11-4M □□□100C32	692
	5.7	1.2	6.8	1.2	10	1.2	4805	255.133	GKS11-3M □□□100C32	684
	5.2	1.2	6.2	1.2	9.1	1.2	5175	279.556	GKS11-4M □□□100C32	692
	5.1	1.1	6.1	1.1	8.9	1.1	5390	286.219	GKS11-3M □□□100C32	684
	4.5	1.0	5.4	1.0	7.9	1.0	6073	322.500	GKS11-3M □□□100C32	684
	4.5	1.0	5.4	1.0	7.9	1.0	5978	322.931	GKS11-4M □□□100C32	692
	4.5	1.9	5.4	1.9	7.9	1.9	5956	321.729	GKS14-4M □□□100C32	692
	4	0.9	4.8	0.9	7	0.9	6736	363.866	GKS11-4M □□□100C32	692
	4	1.7	4.8	1.7	7.1	1.7	6711	362.512	GKS14-4M □□□100C32	692
	3.7	0.8	4.4	0.8	6.5	0.8	7327	395.787	GKS11-4M □□□100C32	692
	3.7	1.6	4.5	1.6	6.5	1.6	7232	390.671	GKS14-4M □□□100C32	692

50 Hz: P_N=3.0 kW
60 Hz: P_N=3.6 kW
87 Hz: P_N=5.4 kW

n_N	1445 r/min		1745 r/min		2555 r/min		M_2 [Nm]	i		
f_N	50 Hz		60 Hz		87 Hz					
P_N	3.0 kW		3.6 kW		5.4 kW					
	n_2 [r/min]	c	n_2 [r/min]	c	n_2 [r/min]	c				
	3.3	1.4	4	1.4	5.8	1.4	8149	440.193	GKS14-4M □□□100C32	692
	2.8	1.2	3.4	1.2	5	1.2	9499	513.121	GKS14-4M □□□100C32	692
	2.5	1.1	3	1.1	4.4	1.1	10703	578.164	GKS14-4M □□□100C32	692
	2.3	1.0	2.8	1.0	4.1	1.0	11528	622.742	GKS14-4M □□□100C32	692
	2.1	0.9	2.5	0.9	3.6	0.9	12989	701.681	GKS14-4M □□□100C32	692

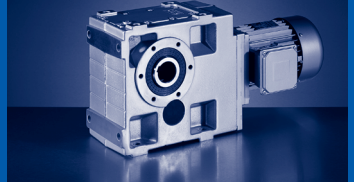

50 Hz: P_N=4.0 kW
60 Hz: P_N=4.8 kW
87 Hz: P_N=7.1 kW

n_N	1455 r/min		1755 r/min		2565 r/min		M_2 [Nm]	i		
f_N	50 Hz		60 Hz		87 Hz					
P_N	4.0 kW		4.8 kW		7.1 kW					
	n_2 [r/min]	c	n_2 [r/min]	c	n_2 [r/min]	c				
	244	3.2	295	3.0	431	2.7	149	5.955	GKS07-3M □□□112C22	684
	224	1.6	271	1.5	396	1.4	162	6.485	GKS06-3M □□□112C22	684
	176	2.6	213	2.5	311	2.2	206	8.254	GKS07-3M □□□112C22	684
	159	3.2	191	3.0	280	2.7	229	9.171	GKS07-3M □□□112C22	684
	158	1.6	191	1.5	279	1.4	229	9.196	GKS06-3M □□□112C22	684
	144	3.2	173	3.0	253	2.7	252	10.124	GKS07-3M □□□112C22	684
	143	1.6	173	1.5	253	1.4	253	10.147	GKS06-3M □□□112C22	684
	128	1.2	154	1.1	225	1.0	284	11.382	GKS06-3M □□□112C22	684
	128	2.2	154	2.1	225	1.8	284	11.378	GKS07-3M □□□112C22	684
	115	1.4	139	1.3	203	1.1	315	12.612	GKS06-3M □□□112C22	684
	115	2.6	138	2.5	202	2.2	317	12.711	GKS07-3M □□□112C22	684
	98	1.6	118	1.5	173	1.4	370	14.824	GKS06-3M □□□112C22	684
	98	2.8	119	2.7	173	2.4	369	14.798	GKS07-3M □□□112C22	684
	87	1.5	105	1.4	154	1.2	416	16.699	GKS06-3M □□□112C22	684
	87	2.6	105	2.4	154	2.2	416	16.674	GKS07-3M □□□112C22	684
	84	2.3	102	2.2	149	1.9	431	17.270	GKS07-3M □□□112C22	684
	82	1.2	99	1.1	144	1.0	444	17.809	GKS06-3M □□□112C22	684
	72	1.3	86	1.3	126	1.1	507	20.329	GKS06-3M □□□112C22	684
	71	2.2	86	2.1	125	1.8	512	20.511	GKS07-3M □□□112C22	684
	64	1.1	77	1.0	112	0.9	571	22.902	GKS06-3M □□□112C22	684
	63	2.0	76	1.9	111	1.7	576	23.111	GKS07-3M □□□112C22	684
	58	1.9	70	1.8	102	1.6	630	25.244	GKS07-3M □□□112C22	684
	56	1.1	68	1.0	99	0.9	649	26.017	GKS06-3M □□□112C22	684
	52	1.7	62	1.6	91	1.4	705	28.274	GKS07-3M □□□112C22	684
	51	1.0	62	0.9	90	0.8	710	28.461	GKS06-3M □□□112C22	684
	46	1.5	55	1.4	81	1.2	794	31.858	GKS07-3M □□□112C22	684
	40	1.4	49	1.4	71	1.2	899	36.063	GKS07-3M □□□112C22	684
	37	3.0	44	2.9	65	2.5	989	39.662	GKS09-3M □□□112C22	684
	36	1.3	43	1.2	63	1.1	1020	40.906	GKS07-3M □□□112C22	684
	34	2.8	41	2.8	59	2.7	1076	43.146	GKS09-3M □□□112C22	684
	33	1.2	40	1.2	58	1.1	1102	44.178	GKS07-3M □□□112C22	684
	30	2.5	36	2.5	53	2.4	1213	48.625	GKS09-3M □□□112C22	684
	29	1.0	35	1.0	51	1.0	1255	50.345	GKS07-3M □□□112C22	684
	25	0.9	31	0.9	45	0.9	1434	57.501	GKS07-3M □□□112C22	684
	25	2.1	30	2.1	44	2.0	1458	58.456	GKS09-3M □□□112C22	684
	22	1.9	27	1.9	39	1.8	1643	65.879	GKS09-3M □□□112C22	684
	21	1.7	25	1.7	36	1.6	1770	70.982	GKS09-3M □□□112C22	684
	21	2.7	25	2.7	36	2.6	1768	70.887	GKS11-3M □□□112C22	684
	18	1.5	22	1.5	32	1.5	1995	79.996	GKS09-3M □□□112C22	684
	18	2.7	22	2.7	32	2.6	1992	79.873	GKS11-3M □□□112C22	684
	16	1.3	19	1.3	28	1.3	2291	91.860	GKS09-3M □□□112C22	684

50 Hz: P_N=4.0 kW
60 Hz: P_N=4.8 kW
87 Hz: P_N=7.1 kW

n_N	1455 r/min		1755 r/min		2565 r/min		M_2 [Nm]	i		
f_N	50 Hz		60 Hz		87 Hz					
P_N	4.0 kW		4.8 kW		7.1 kW					
	n_2 [r/min]	c	n_2 [r/min]	c	n_2 [r/min]	c				
	16	2.2	19	2.2	28	2.1	2288	91.737	GKS11-3M □□□112C22	684
	16	2.7	19	2.7	28	2.6	2258	90.551	GKS14-3M □□□112C22	684
	15	1.2	18	1.2	26	1.2	2465	100.551	GKS09-4M □□□112C22	692
	14	1.2	17	1.2	25	1.1	2582	103.524	GKS09-3M □□□112C22	684
	14	2.2	17	2.2	25	2.1	2578	103.365	GKS11-3M □□□112C22	684
	14	2.3	17	2.3	25	2.2	2503	102.119	GKS11-4M □□□112C22	692
	14	2.7	17	2.7	25	2.6	2544	102.029	GKS14-3M □□□112C22	684
	13	1.1	16	1.1	23	1.1	2780	111.484	GKS09-3M □□□112C22	684
	13	1.1	16	1.1	23	1.1	2778	113.320	GKS09-4M □□□112C22	692
	13	1.8	16	1.8	23	1.8	2776	111.335	GKS11-3M □□□112C22	684
	13	2.1	15	2.1	22	2.1	2821	115.063	GKS11-4M □□□112C22	692
	13	2.3	16	2.3	23	2.2	2740	109.896	GKS14-3M □□□112C22	684
	12	1.0	14	1.0	20	1.0	3133	125.641	GKS09-3M □□□112C22	684
	12	1.0	14	1.0	21	1.0	3022	123.275	GKS09-4M □□□112C22	692
	12	1.8	14	1.8	20	1.8	3128	125.448	GKS11-3M □□□112C22	684
	12	1.9	14	1.9	21	1.9	3066	125.095	GKS11-4M □□□112C22	692
	12	2.3	14	2.3	21	2.3	3088	123.826	GKS14-3M □□□112C22	684
	11	0.9	13	0.9	19	0.9	3406	138.929	GKS09-4M □□□112C22	692
	11	1.8	13	1.8	19	1.8	3464	138.913	GKS14-3M □□□112C22	684
	10	1.5	13	1.5	18	1.5	3509	140.732	GKS11-3M □□□112C22	684
	10	1.7	13	1.7	18	1.7	3455	140.952	GKS11-4M □□□112C22	692
	9.6	0.8	12	0.8	17	0.8	3702	151.012	GKS09-4M □□□112C22	692
	9.5	1.5	12	1.5	17	1.5	3756	153.242	GKS11-4M □□□112C22	692
	9.3	1.8	11	1.8	16	1.8	3903	156.522	GKS14-3M □□□112C22	684
	9.2	1.5	11	1.5	16	1.5	3954	158.571	GKS11-3M □□□112C22	684
	9.2	3.0	11	3.0	16	3.0	3874	158.039	GKS14-4M □□□112C22	692
	8.4	1.4	10	1.4	15	1.4	4232	172.667	GKS11-4M □□□112C22	692
	8.2	2.6	9.9	2.6	14	2.6	4365	178.072	GKS14-4M □□□112C22	692
	7.8	1.3	9.4	1.3	14	1.3	4652	186.572	GKS11-3M □□□112C22	684
	7.8	2.5	9.4	2.5	14	2.5	4652	186.572	GKS14-3M □□□112C22	684
	7.5	2.4	9.1	2.4	13	2.4	4749	193.754	GKS14-4M □□□112C22	692
	7.2	1.2	8.7	1.2	13	1.2	4949	201.890	GKS11-4M □□□112C22	692
	6.9	1.1	8.4	1.1	12	1.1	5242	210.222	GKS11-3M □□□112C22	684
	6.9	2.2	8.4	2.2	12	2.2	5242	210.222	GKS14-3M □□□112C22	684
	6.7	2.1	8	2.1	12	2.1	5351	218.315	GKS14-4M □□□112C22	692
	6.4	1.1	7.8	1.1	11	1.1	5646	226.431	GKS11-3M □□□112C22	684
	6.4	1.1	7.7	1.1	11	1.1	5576	227.481	GKS11-4M □□□112C22	692
	6.4	2.1	7.8	2.1	11	2.1	5646	226.431	GKS14-3M □□□112C22	684
	6.1	2.0	7.4	2.0	11	2.0	5821	237.467	GKS14-4M □□□112C22	692
	5.9	1.0	7.1	1.0	10	1.0	6082	248.106	GKS11-4M □□□112C22	692
	5.7	0.9	6.9	0.9	10	0.9	6362	255.133	GKS11-3M □□□112C22	684

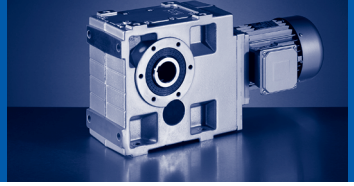

50 Hz: P_N=4.0 kW
60 Hz: P_N=4.8 kW
87 Hz: P_N=7.1 kW

n_N	1455 r/min		1755 r/min		2565 r/min		M_2 [Nm]	i		
f_N	50 Hz		60 Hz		87 Hz					
P_N	4.0 kW		4.8 kW		7.1 kW					
	n_2 [r/min]	c	n_2 [r/min]	c	n_2 [r/min]	c				
	5.7	1.8	6.9	1.8	10	1.8	6362	255.133	GKS14-3M □□□112C22	684
	5.4	1.8	6.6	1.8	9.6	1.8	6559	267.568	GKS14-4M □□□112C22	692
	5.2	0.9	6.3	0.9	9.2	0.9	6853	279.556	GKS11-4M □□□112C22	692
	5.1	0.8	6.1	0.8	9	0.8	7137	286.219	GKS11-3M □□□112C22	684
	5.1	1.6	6.1	1.6	9	1.6	7137	286.219	GKS14-3M □□□112C22	684
	4.5	1.4	5.4	1.4	8	1.4	8042	322.500	GKS14-3M □□□112C22	684
	4.5	1.5	5.5	1.5	8	1.5	7886	321.729	GKS14-4M □□□112C22	692
	4	1.3	4.8	1.3	7.1	1.3	8886	362.512	GKS14-4M □□□112C22	692
	3.7	1.2	4.5	1.2	6.6	1.2	9576	390.671	GKS14-4M □□□112C22	692
	3.3	1.1	4	1.1	5.8	1.1	10790	440.193	GKS14-4M □□□112C22	692
	2.8	0.9	3.4	0.9	5	0.9	12578	513.121	GKS14-4M □□□112C22	692
	2.5	0.8	3	0.8	4.4	0.8	14172	578.164	GKS14-4M □□□112C22	692

50 Hz: P_N=5.5 kW
60 Hz: P_N=6.6 kW
87 Hz: P_N=9.7 kW

n_N	1470 r/min		1770 r/min		2580 r/min		M_2 [Nm]	i		
f_N	50 Hz		60 Hz		87 Hz					
P_N	5.5 kW		6.6 kW		9.7 kW					
	n_2 [r/min]	c	n_2 [r/min]	c	n_2 [r/min]	c				
	247	2.3	297	2.2	433	1.9	202	5.955	GKS07-3M □□□132C12	684
	227	1.2	273	1.1	398	1.0	220	6.485	GKS06-3M□□□132C12	684
	178	1.9	214	1.8	313	1.6	280	8.254	GKS07-3M □□□132C12	684
	160	1.2	193	1.1	281	1.0	312	9.196	GKS06-3M□□□132C12	684
	160	2.3	193	2.2	281	1.9	311	9.171	GKS07-3M □□□132C12	684
	145	1.2	174	1.1	254	1.0	344	10.147	GKS06-3M□□□132C12	684
	145	2.3	175	2.2	255	1.9	344	10.124	GKS07-3M □□□132C12	684
	129	0.9	156	0.8			386	11.382	GKS06-3M□□□132C12	684
	129	1.6	156	1.5	227	1.3	386	11.378	GKS07-3M □□□132C12	684
	117	1.0	140	0.9	205	0.8	428	12.612	GKS06-3M□□□132C12	684
	116	1.9	139	1.8	203	1.6	431	12.711	GKS07-3M □□□132C12	684
	99	1.2	119	1.1	174	1.0	503	14.824	GKS06-3M□□□132C12	684
	99	2.1	120	2.0	174	1.7	502	14.798	GKS07-3M □□□132C12	684
	88	1.1	106	1.0	155	0.9	567	16.699	GKS06-3M□□□132C12	684
	88	1.9	106	1.8	155	1.6	566	16.674	GKS07-3M □□□132C12	684
	85	1.7	103	1.6	149	1.4	586	17.270	GKS07-3M □□□132C12	684
	83	0.9	99	0.8			604	17.809	GKS06-3M□□□132C12	684
	72	1.0	87	0.9	127	0.8	690	20.329	GKS06-3M□□□132C12	684
	72	1.6	86	1.5	126	1.3	696	20.511	GKS07-3M □□□132C12	684
	64	1.5	77	1.4	112	1.2	784	23.111	GKS07-3M □□□132C12	684
	58	1.4	70	1.3	102	1.2	857	25.244	GKS07-3M □□□132C12	684
	52	1.3	63	1.2	91	1.1	960	28.274	GKS07-3M □□□132C12	684
	50	2.9	61	2.8	88	2.5	992	29.228	GKS09-3M □□□132C12	684
	46	1.1	56	1.0	81	0.9	1081	31.858	GKS07-3M □□□132C12	684
	45	2.7	54	2.5	78	2.2	1118	32.940	GKS09-3M □□□132C12	684
	42	2.5	50	2.4	73	2.1	1194	35.193	GKS09-3M □□□132C12	684
	41	1.1	49	1.0	72	0.9	1224	36.063	GKS07-3M □□□132C12	684
	37	2.2	45	2.1	65	1.9	1346	39.662	GKS09-3M □□□132C12	684
	36	0.9	43	0.9			1388	40.906	GKS07-3M □□□132C12	684
	34	2.1	41	2.1	60	2.0	1464	43.146	GKS09-3M □□□132C12	684
	33	0.9	40	0.9	58	0.8	1499	44.178	GKS07-3M □□□132C12	684
	30	1.8	36	1.8	53	1.7	1650	48.625	GKS09-3M □□□132C12	684
	26	3.1	31	3.1	45	2.9	1958	57.683	GKS11-3M □□□132C12	684
	25	1.5	30	1.5	44	1.5	1984	58.456	GKS09-3M □□□132C12	684
	23	2.7	27	2.7	40	2.6	2206	64.995	GKS11-3M □□□132C12	684
	22	1.4	27	1.4	39	1.3	2236	65.879	GKS09-3M □□□132C12	684
	21	1.3	25	1.3	36	1.2	2409	70.982	GKS09-3M □□□132C12	684
	21	2.5	25	2.5	36	2.4	2406	70.887	GKS11-3M □□□132C12	684
	18	1.1	22	1.1	32	1.1	2715	79.996	GKS09-3M □□□132C12	684
	18	2.2	22	2.2	32	2.1	2711	79.873	GKS11-3M □□□132C12	684
	16	1.9	19	1.9	28	1.8	3113	91.737	GKS11-3M □□□132C12	684

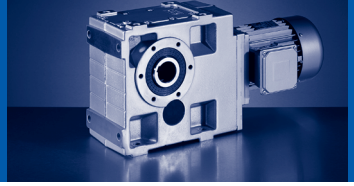

50 Hz: P_N=5.5 kW
60 Hz: P_N=6.6 kW
87 Hz: P_N=9.7 kW

n_N	1470 r/min		1770 r/min		2580 r/min		M_2 [Nm]	i		
f_N	50 Hz		60 Hz		87 Hz					
P_N	5.5 kW		6.6 kW		9.7 kW					
	n_2 [r/min]	c	n_2 [r/min]	c	n_2 [r/min]	c				
	15	3.1	18	3.1	27	2.9	3252	97.467	GKS14-4M □□□132C12	692
	14	1.7	17	1.7	25	1.6	3407	102.119	GKS11-4M □□□132C12	692
	14	1.7	17	1.7	25	1.6	3508	103.365	GKS11-3M □□□132C12	684
	13	1.5	15	1.5	22	1.5	3839	115.063	GKS11-4M □□□132C12	692
	13	1.6	16	1.6	23	1.6	3778	111.335	GKS11-3M □□□132C12	684
	13	3.0	16	3.0	24	2.8	3664	109.822	GKS14-4M □□□132C12	692
	13	3.2	16	3.2	24	3.0	3730	109.896	GKS14-3M □□□132C12	684
	12	1.4	14	1.4	21	1.4	4173	125.095	GKS11-4M □□□132C12	692
	12	1.4	14	1.4	21	1.4	4257	125.448	GKS11-3M □□□132C12	684
	12	2.7	15	2.7	22	2.7	3986	119.493	GKS14-4M □□□132C12	692
	12	2.8	14	2.8	21	2.8	4202	123.826	GKS14-3M □□□132C12	684
	11	2.5	13	2.5	19	2.5	4714	138.913	GKS14-3M □□□132C12	684
	11	2.5	13	2.5	19	2.5	4492	134.640	GKS14-4M □□□132C12	692
	10	1.3	13	1.3	18	1.3	4702	140.952	GKS11-4M □□□132C12	692
	9.6	1.1	12	1.1	17	1.1	5112	153.242	GKS11-4M □□□132C12	692
	9.4	2.2	11	2.2	17	2.2	5312	156.522	GKS14-3M □□□132C12	684
	9.3	2.2	11	2.2	16	2.2	5272	158.039	GKS14-4M □□□132C12	692
	8.5	1.0	10	1.0	15	1.0	5760	172.667	GKS11-4M □□□132C12	692
	8.3	1.9	9.9	1.9	15	1.9	5941	178.072	GKS14-4M □□□132C12	692
	7.9	0.9	9.5	0.9	14	0.9	6332	186.572	GKS11-3M □□□132C12	684
	7.9	1.8	9.5	1.8	14	1.8	6332	186.572	GKS14-3M □□□132C12	684
	7.6	1.8	9.1	1.8	13	1.8	6464	193.754	GKS14-4M □□□132C12	692
	7.3	0.9	8.8	0.9	13	0.9	6735	201.890	GKS11-4M □□□132C12	692
	7	0.8	8.4	0.8	12	0.8	7134	210.222	GKS11-3M □□□132C12	684
	7	1.6	8.4	1.6	12	1.6	7134	210.222	GKS14-3M □□□132C12	684
	6.7	1.6	8.1	1.6	12	1.6	7283	218.315	GKS14-4M □□□132C12	692
	6.5	1.5	7.8	1.5	11	1.5	7685	226.431	GKS14-3M □□□132C12	684
	6.2	1.5	7.5	1.5	11	1.5	7922	237.467	GKS14-4M □□□132C12	692
	5.8	1.3	6.9	1.3	10	1.3	8659	255.133	GKS14-3M □□□132C12	684
	5.5	1.3	6.6	1.3	9.6	1.3	8926	267.568	GKS14-4M □□□132C12	692
	5.1	1.2	6.2	1.2	9	1.2	9714	286.219	GKS14-3M □□□132C12	684
	4.6	1.1	5.5	1.1	8	1.1	10945	322.500	GKS14-3M □□□132C12	684
	4.6	1.1	5.5	1.1	8	1.1	10733	321.729	GKS14-4M □□□132C12	692
	4.1	1.0	4.9	1.0	7.1	1.0	12094	362.512	GKS14-4M □□□132C12	692
	3.8	0.9	4.5	0.9	6.6	0.9	13033	390.671	GKS14-4M □□□132C12	692

50 Hz: P_N=7.5 kW
60 Hz: P_N=9.0 kW
87 Hz: P_N=13.2 kW

n_N	1460 r/min		1760 r/min		2570 r/min		M_2 [Nm]	i		
f_N	50 Hz		60 Hz		87 Hz					
P_N	7.5 kW		9.0 kW		13.2 kW					
	n_2 [r/min]	c	n_2 [r/min]	c	n_2 [r/min]	c				
	245	1.7	296	1.6	432	1.4	278	5.955	GKS07-3M □□□132C22	684
	225	0.9	271	0.8			302	6.485	GKS06-3M□□□132C22	684
	177	1.4	213	1.3	311	1.2	385	8.254	GKS07-3M □□□132C22	684
	159	0.9	191	0.8			429	9.196	GKS06-3M□□□132C22	684
	159	1.7	192	1.6	280	1.4	427	9.171	GKS07-3M □□□132C22	684
	144	0.9	173	0.8			473	10.147	GKS06-3M□□□132C22	684
	144	1.7	174	1.6	254	1.4	472	10.124	GKS07-3M □□□132C22	684
	128	1.2	155	1.1	226	1.0	530	11.378	GKS07-3M □□□132C22	684
	119	2.8	143	2.7	209	2.4	572	12.283	GKS09-3M □□□132C22	684
	115	1.4	139	1.3	202	1.2	592	12.711	GKS07-3M □□□132C22	684
	109	2.8	132	2.7	192	2.4	623	13.360	GKS09-3M □□□132C22	684
	99	0.9	119	0.8			691	14.824	GKS06-3M□□□132C22	684
	99	1.5	119	1.4	174	1.3	690	14.798	GKS07-3M □□□132C22	684
	91	2.4	109	2.3	159	2.0	751	16.122	GKS09-3M □□□132C22	684
	88	1.4	106	1.3	154	1.2	777	16.674	GKS07-3M □□□132C22	684
	85	1.2	102	1.2	149	1.0	805	17.270	GKS07-3M □□□132C22	684
	83	2.4	100	2.3	147	2.0	817	17.536	GKS09-3M □□□132C22	684
	75	2.8	90	2.7	132	2.4	911	19.541	GKS09-3M □□□132C22	684
	71	1.2	86	1.1	125	1.0	956	20.511	GKS07-3M □□□132C22	684
	66	2.6	80	2.5	117	2.2	1026	22.022	GKS09-3M □□□132C22	684
	63	1.1	76	1.0	111	0.9	1077	23.111	GKS07-3M □□□132C22	684
	58	1.0	70	1.0	102	0.8	1176	25.244	GKS07-3M □□□132C22	684
	57	2.4	69	2.3	100	2.0	1195	25.649	GKS09-3M □□□132C22	684
	52	0.9	62	0.9			1317	28.274	GKS07-3M □□□132C22	684
	50	2.1	60	2.0	88	1.8	1362	29.228	GKS09-3M □□□132C22	684
	44	1.9	53	1.8	78	1.6	1535	32.940	GKS09-3M □□□132C22	684
	42	1.9	50	1.8	73	1.5	1640	35.193	GKS09-3M □□□132C22	684
	37	1.6	44	1.5	65	1.4	1848	39.662	GKS09-3M □□□132C22	684
	36	3.1	44	3.0	64	2.6	1877	40.272	GKS11-3M □□□132C22	684
	34	1.5	41	1.5	60	1.4	2010	43.146	GKS09-3M □□□132C22	684
	33	2.8	40	2.8	59	2.7	2040	43.783	GKS11-3M □□□132C22	684
	30	1.3	36	1.3	53	1.3	2266	48.625	GKS09-3M □□□132C22	684
	30	2.6	36	2.6	52	2.5	2299	49.333	GKS11-3M □□□132C22	684
	25	1.1	30	1.1	44	1.1	2724	58.456	GKS09-3M □□□132C22	684
	25	2.2	31	2.2	45	2.1	2688	57.683	GKS11-3M □□□132C22	684
	23	2.0	27	2.0	40	1.9	3028	64.995	GKS11-3M □□□132C22	684
	22	1.0	27	1.0	39	0.9	3070	65.879	GKS09-3M □□□132C22	684
	21	0.9	25	0.9	36	0.9	3307	70.982	GKS09-3M □□□132C22	684
	21	1.8	25	1.8	36	1.7	3303	70.887	GKS11-3M □□□132C22	684
	19	3.2	23	3.2	33	3.0	3620	77.681	GKS14-3M □□□132C22	684
	18	0.8	22	0.8			3727	79.996	GKS09-3M □□□132C22	684

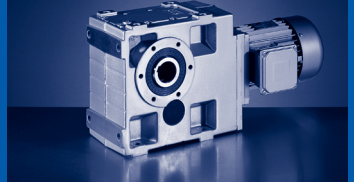

50 Hz: P_N=7.5 kW
60 Hz: P_N=9.0 kW
87 Hz: P_N=13.2 kW

n_N	1460 r/min		1760 r/min		2570 r/min		M_2 [Nm]	i		
f_N	50 Hz		60 Hz		87 Hz					
P_N	7.5 kW		9.0 kW		13.2 kW					
	n_2 [r/min]	c	n_2 [r/min]	c	n_2 [r/min]	c				
	18	1.6	22	1.6	32	1.5	3722	79.873	GKS11-3M □□□132C22	684
	16	1.4	19	1.4	28	1.3	4275	91.737	GKS11-3M □□□132C22	684
	16	2.7	19	2.7	28	2.6	4219	90.551	GKS14-3M □□□132C22	684
	15	2.2	18	2.2	26	2.1	4464	97.467	GKS14-4M □□□132C22	692
	14	1.2	17	1.2	25	1.2	4677	102.119	GKS11-4M □□□132C22	692
	14	1.3	17	1.3	25	1.2	4816	103.365	GKS11-3M □□□132C22	684
	14	2.5	17	2.5	25	2.3	4754	102.029	GKS14-3M □□□132C22	684
	13	1.1	15	1.1	22	1.1	5270	115.063	GKS11-4M □□□132C22	692
	13	1.2	16	1.2	23	1.2	5188	111.335	GKS11-3M □□□132C22	684
	13	2.2	16	2.2	23	2.1	5030	109.822	GKS14-4M □□□132C22	692
	13	2.3	16	2.3	23	2.2	5121	109.896	GKS14-3M □□□132C22	684
	12	1.0	14	1.0	21	1.0	5730	125.095	GKS11-4M □□□132C22	692
	12	1.0	14	1.0	21	1.0	5845	125.448	GKS11-3M □□□132C22	684
	12	2.0	15	2.0	22	2.0	5473	119.493	GKS14-4M □□□132C22	692
	12	2.0	14	2.0	21	2.0	5770	123.826	GKS14-3M □□□132C22	684
	11	1.8	13	1.8	19	1.8	6167	134.640	GKS14-4M □□□132C22	692
	11	1.8	13	1.8	19	1.8	6473	138.913	GKS14-3M □□□132C22	684
	10	0.9	13	0.9	18	0.9	6456	140.952	GKS11-4M □□□132C22	692
	9.5	0.8	12	0.8	17	0.8	7019	153.242	GKS11-4M □□□132C22	692
	9.3	1.6	11	1.6	16	1.6	7293	156.522	GKS14-3M □□□132C22	684
	9.2	1.6	11	1.6	16	1.6	7239	158.039	GKS14-4M □□□132C22	692
	8.2	1.4	9.9	1.4	14	1.4	8156	178.072	GKS14-4M □□□132C22	692
	7.8	1.3	9.4	1.3	14	1.3	8693	186.572	GKS14-3M □□□132C22	684
	7.5	1.3	9.1	1.3	13	1.3	8875	193.754	GKS14-4M □□□132C22	692
	7	1.2	8.4	1.2	12	1.2	9795	210.222	GKS14-3M □□□132C22	684
	6.7	1.2	8.1	1.2	12	1.2	10000	218.315	GKS14-4M □□□132C22	692
	6.5	1.1	7.8	1.1	11	1.1	10551	226.431	GKS14-3M □□□132C22	684
	6.2	1.1	7.4	1.1	11	1.1	10877	237.467	GKS14-4M □□□132C22	692
	5.7	1.0	6.9	1.0	10	1.0	11888	255.133	GKS14-3M □□□132C22	684
	5.5	0.9	6.6	0.9	9.6	0.9	12255	267.568	GKS14-4M □□□132C22	692
	5.1	0.9	6.2	0.9	9	0.9	13336	286.219	GKS14-3M □□□132C22	684

50 Hz: P_N=11.0 kW
60 Hz: P_N=13.2 kW
87 Hz: P_N=19.4 kW

n_N	1470 r/min		1770 r/min		2580 r/min		M_2 [Nm]	i		
f_N	50 Hz		60 Hz		87 Hz					
P_N	11.0 kW		13.2 kW		19.4 kW					
	n_2 [r/min]	c	n_2 [r/min]	c	n_2 [r/min]	c				
	247	1.2	297	1.1	433	1.0	404	5.955	GKS07-3M □□□160C22	684
	178	1.0	214	0.9	313	0.8	560	8.254	GKS07-3M □□□160C22	684
	160	1.2	193	1.1	281	1.0	623	9.171	GKS07-3M □□□160C22	684
	145	1.2	175	1.1	255	1.0	687	10.124	GKS07-3M □□□160C22	684
	120	1.9	144	1.8	210	1.6	834	12.283	GKS09-3M □□□160C22	684
	116	1.0	139	0.9	203	0.8	863	12.711	GKS07-3M □□□160C22	684
	110	1.9	133	1.8	193	1.6	907	13.360	GKS09-3M □□□160C22	684
	99	1.0	120	1.0	174	0.9	1004	14.798	GKS07-3M □□□160C22	684
	93	2.9	112	2.7	163	2.4	1077	15.874	GKS11-3M □□□160C22	684
	91	1.7	110	1.6	160	1.4	1094	16.122	GKS09-3M □□□160C22	684
	88	1.0	106	0.9			1132	16.674	GKS07-3M □□□160C22	684
	85	0.9	103	0.8			1172	17.270	GKS07-3M □□□160C22	684
	85	2.9	103	2.7	149	2.4	1172	17.265	GKS11-3M □□□160C22	684
	84	1.7	101	1.6	147	1.4	1190	17.536	GKS09-3M □□□160C22	684
	75	1.9	91	1.8	132	1.6	1326	19.541	GKS09-3M □□□160C22	684
	67	1.8	80	1.7	117	1.5	1495	22.022	GKS09-3M □□□160C22	684
	57	1.6	69	1.6	101	1.4	1741	25.649	GKS09-3M □□□160C22	684
	57	2.9	69	2.7	101	2.4	1739	25.615	GKS11-3M □□□160C22	684
	53	2.7	63	2.6	92	2.3	1902	28.021	GKS11-3M □□□160C22	684
	50	1.5	61	1.4	88	1.2	1984	29.228	GKS09-3M □□□160C22	684
	47	2.6	56	2.4	82	2.2	2143	31.573	GKS11-3M □□□160C22	684
	45	1.3	54	1.3	78	1.1	2236	32.940	GKS09-3M □□□160C22	684
	42	1.3	50	1.2	73	1.1	2389	35.193	GKS09-3M □□□160C22	684
	41	2.3	50	2.2	72	2.0	2426	35.741	GKS11-3M □□□160C22	684
	37	1.1	45	1.1	65	0.9	2692	39.662	GKS09-3M □□□160C22	684
	37	2.2	44	2.0	64	1.8	2734	40.272	GKS11-3M □□□160C22	684
	34	1.0	41	1.0	60	1.0	2929	43.146	GKS09-3M □□□160C22	684
	34	2.0	40	2.0	59	1.9	2972	43.783	GKS11-3M □□□160C22	684
	30	0.9	36	0.9	53	0.9	3300	48.625	GKS09-3M □□□160C22	684
	30	1.8	36	1.8	52	1.7	3349	49.333	GKS11-3M □□□160C22	684
	26	1.5	31	1.5	45	1.5	3915	57.683	GKS11-3M □□□160C22	684
	26	3.0	32	3.0	46	2.9	3818	56.251	GKS14-3M □□□160C22	684
	23	1.4	27	1.4	40	1.3	4412	64.995	GKS11-3M □□□160C22	684
	23	2.7	28	2.7	41	2.5	4302	63.382	GKS14-3M □□□160C22	684
	21	1.2	25	1.2	36	1.2	4811	70.887	GKS11-3M □□□160C22	684
	21	2.5	26	2.5	37	2.3	4679	68.942	GKS14-3M □□□160C22	684
	19	2.2	23	2.2	33	2.1	5273	77.681	GKS14-3M □□□160C22	684
	18	1.1	22	1.1	32	1.1	5421	79.873	GKS11-3M □□□160C22	684
	16	1.9	20	1.9	29	1.8	6146	90.551	GKS14-3M □□□160C22	684
	15	1.5	18	1.5	27	1.5	6503	97.467	GKS14-4M □□□160C22	692
	14	1.7	17	1.7	25	1.6	6925	102.029	GKS14-3M □□□160C22	684

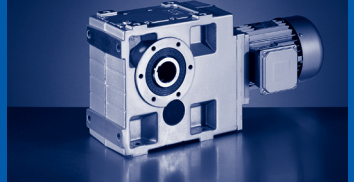

50 Hz: P_N=11.0 kW
60 Hz: P_N=13.2 kW
87 Hz: P_N=19.4 kW

n_N	1470 r/min		1770 r/min		2580 r/min		M_2 [Nm]	i		
f_N	50 Hz		60 Hz		87 Hz					
P_N	11.0 kW		13.2 kW		19.4 kW					
	n_2 [r/min]	c	n_2 [r/min]	c	n_2 [r/min]	c				
	13	1.5	16	1.5	24	1.4	7327	109.822	GKS14-4M □□□160C22	692
	13	1.6	16	1.6	24	1.5	7459	109.896	GKS14-3M □□□160C22	684
	12	1.4	15	1.4	22	1.4	7973	119.493	GKS14-4M □□□160C22	692
	12	1.4	14	1.4	21	1.4	8405	123.826	GKS14-3M □□□160C22	684
	11	1.3	13	1.3	19	1.3	8983	134.640	GKS14-4M □□□160C22	692
	9.3	1.1	11	1.1	16	1.1	10545	158.039	GKS14-4M □□□160C22	692
	8.3	1.0	9.9	1.0	15	1.0	11881	178.072	GKS14-4M □□□160C22	692
	7.9	0.9	9.5	0.9	14	0.9	12664	186.572	GKS14-3M □□□160C22	684
	7.6	0.9	9.1	0.9	13	0.9	12927	193.754	GKS14-4M □□□160C22	692
	7	0.8	8.4	0.8	12	0.8	14269	210.222	GKS14-3M □□□160C22	684

50 Hz: P_N=15.0 kW
60 Hz: P_N=18.0 kW
87 Hz: P_N=26.4 kW

n_N	1470 r/min		1770 r/min		2580 r/min		M_2 [Nm]	i		
f_N	50 Hz		60 Hz		87 Hz					
P_N	15.0 kW		18.0 kW		26.4 kW					
	n_2 [r/min]	c	n_2 [r/min]	c	n_2 [r/min]	c				
	247	0.9	297	0.8			551	5.955	GKS07-3M □□□160C32	684
	160	0.9	193	0.8			849	9.171	GKS07-3M □□□160C32	684
	145	0.9	175	0.8			937	10.124	GKS07-3M □□□160C32	684
	122	2.5	146	2.3	213	2.1	1119	12.094	GKS11-3M □□□160C32	684
	120	1.4	144	1.3	210	1.2	1137	12.283	GKS09-3M □□□160C32	684
	112	2.5	135	2.3	196	2.1	1218	13.154	GKS11-3M □□□160C32	684
	110	1.4	133	1.3	193	1.2	1237	13.360	GKS09-3M □□□160C32	684
	93	2.1	112	2.0	163	1.8	1469	15.874	GKS11-3M □□□160C32	684
	91	1.2	110	1.1	160	1.0	1492	16.122	GKS09-3M □□□160C32	684
	85	2.1	103	2.0	149	1.8	1598	17.265	GKS11-3M □□□160C32	684
	84	1.2	101	1.1	147	1.0	1623	17.536	GKS09-3M □□□160C32	684
	75	1.4	91	1.3	132	1.2	1809	19.541	GKS09-3M □□□160C32	684
	75	2.5	91	2.3	132	2.1	1806	19.515	GKS11-3M □□□160C32	684
	67	1.3	80	1.2	117	1.1	2038	22.022	GKS09-3M □□□160C32	684
	67	2.4	81	2.3	117	2.0	2035	21.989	GKS11-3M □□□160C32	684
	57	1.2	69	1.1	101	1.0	2374	25.649	GKS09-3M □□□160C32	684
	57	2.1	69	2.0	101	1.8	2371	25.615	GKS11-3M □□□160C32	684
	53	2.0	63	1.9	92	1.7	2594	28.021	GKS11-3M □□□160C32	684
	50	1.1	61	1.0	88	0.9	2705	29.228	GKS09-3M □□□160C32	684
	47	1.9	56	1.8	82	1.6	2922	31.573	GKS11-3M □□□160C32	684
	45	1.0	54	0.9	78	0.8	3049	32.940	GKS09-3M □□□160C32	684
	42	0.9	50	0.9			3257	35.193	GKS09-3M □□□160C32	684
	42	3.1	51	3.0	74	2.6	3211	34.692	GKS14-3M □□□160C32	684
	41	1.7	50	1.6	72	1.4	3308	35.741	GKS11-3M □□□160C32	684
	38	3.0	45	2.9	66	2.5	3618	39.089	GKS14-3M □□□160C32	684
	37	0.8					3671	39.662	GKS09-3M □□□160C32	684
	37	1.6	44	1.5	64	1.3	3727	40.272	GKS11-3M □□□160C32	684
	35	2.7	42	2.7	61	2.6	3937	42.531	GKS14-3M □□□160C32	684
	34	1.4	40	1.4	59	1.4	4052	43.783	GKS11-3M □□□160C32	684
	31	2.5	37	2.5	54	2.4	4436	47.923	GKS14-3M □□□160C32	684
	30	1.3	36	1.3	52	1.2	4566	49.333	GKS11-3M □□□160C32	684
	26	1.1	31	1.1	45	1.1	5339	57.683	GKS11-3M □□□160C32	684
	26	2.2	32	2.2	46	2.1	5206	56.251	GKS14-3M □□□160C32	684
	23	1.0	27	1.0	40	0.9	6016	64.995	GKS11-3M □□□160C32	684
	23	2.0	28	2.0	41	1.9	5866	63.382	GKS14-3M □□□160C32	684
	21	0.9	25	0.9	36	0.9	6561	70.887	GKS11-3M □□□160C32	684
	21	1.8	26	1.8	37	1.7	6381	68.942	GKS14-3M □□□160C32	684
	19	1.6	23	1.6	33	1.5	7190	77.681	GKS14-3M □□□160C32	684
	18	0.8	22	0.8			7393	79.873	GKS11-3M □□□160C32	684
	16	1.4	20	1.4	29	1.3	8381	90.551	GKS14-3M □□□160C32	684
	15	1.1	18	1.1	27	1.1	8868	97.467	GKS14-4M □□□160C32	692

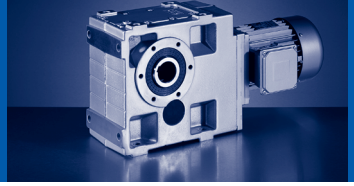

50 Hz: P_N=15.0 kW
60 Hz: P_N=18.0 kW
87 Hz: P_N=26.4 kW

n_N	1470 r/min		1770 r/min		2580 r/min		M_2 [Nm]	i		
f_N	50 Hz		60 Hz		87 Hz					
P_N	15.0 kW		18.0 kW		26.4 kW					
	n_2 [r/min]	c	n_2 [r/min]	c	n_2 [r/min]	c				
	14	1.2	17	1.2	25	1.2	9443	102.029	GKS14-3M □□□160C32	684
	13	1.1	16	1.1	24	1.0	9992	109.822	GKS14-4M □□□160C32	692
	13	1.2	16	1.2	24	1.1	10172	109.896	GKS14-3M □□□160C32	684
	12	1.0	15	1.0	22	1.0	10872	119.493	GKS14-4M □□□160C32	692
	12	1.0	14	1.0	21	1.0	11461	123.826	GKS14-3M □□□160C32	684
	11	0.9	13	0.9	19	0.9	12250	134.640	GKS14-4M □□□160C32	692
	9.3	0.8	11	0.8	16	0.8	14379	158.039	GKS14-4M □□□160C32	692

50 Hz: P_N=18.5 kW
60 Hz: P_N=22.2 kW
87 Hz: P_N=32.5 kW

n_N	1475 r/min		1775 r/min		2585 r/min		M_2 [Nm]	i		
f_N	50 Hz		60 Hz		87 Hz					
P_N	18.5 kW		22.2 kW		32.5 kW					
	n_2 [r/min]	c	n_2 [r/min]	c	n_2 [r/min]	c				
	122	2.0	147	1.9	214	1.7	1376	12.094	GKS11-3M □□□180C12	684
	120	1.2	145	1.1	211	1.0	1397	12.283	GKS09-3M □□□180C12	684
	112	2.0	135	1.9	197	1.7	1497	13.154	GKS11-3M □□□180C12	684
	110	1.2	133	1.1	194	1.0	1520	13.360	GKS09-3M □□□180C12	684
	93	1.7	112	1.6	163	1.4	1806	15.874	GKS11-3M □□□180C12	684
	92	1.0	110	0.9	160	0.8	1834	16.122	GKS09-3M □□□180C12	684
	89	2.8	107	2.7	155	2.4	1894	16.646	GKS14-3M □□□180C12	684
	85	1.7	103	1.6	150	1.4	1964	17.265	GKS11-3M □□□180C12	684
	84	1.0	101	0.9	147	0.8	1995	17.536	GKS09-3M □□□180C12	684
	81	2.8	97	2.7	141	2.4	2083	18.311	GKS14-3M □□□180C12	684
	76	1.2	91	1.1	132	1.0	2223	19.541	GKS09-3M □□□180C12	684
	76	2.0	91	1.9	133	1.7	2220	19.515	GKS11-3M □□□180C12	684
	67	1.1	81	1.0	117	0.9	2505	22.022	GKS09-3M □□□180C12	684
	67	2.0	81	1.9	118	1.6	2502	21.989	GKS11-3M □□□180C12	684
	60	2.8	72	2.7	105	2.4	2810	24.696	GKS14-3M □□□180C12	684
	58	1.0	69	0.9	101	0.8	2918	25.649	GKS09-3M □□□180C12	684
	58	1.7	69	1.6	101	1.4	2914	25.615	GKS11-3M □□□180C12	684
	54	2.8	65	2.7	95	2.4	3091	27.165	GKS14-3M □□□180C12	684
	53	1.6	63	1.5	92	1.4	3188	28.021	GKS11-3M □□□180C12	684
	51	0.9	61	0.8			3325	29.228	GKS09-3M □□□180C12	684
	48	2.8	58	2.7	85	2.4	3482	30.609	GKS14-3M □□□180C12	684
	47	1.5	56	1.5	82	1.3	3592	31.573	GKS11-3M □□□180C12	684
	43	2.5	51	2.4	75	2.1	3947	34.692	GKS14-3M □□□180C12	684
	41	1.4	50	1.3	72	1.2	4066	35.741	GKS11-3M □□□180C12	684
	38	2.5	45	2.3	66	2.1	4447	39.089	GKS14-3M □□□180C12	684
	37	1.3	44	1.2	64	1.1	4582	40.272	GKS11-3M □□□180C12	684
	35	2.2	42	2.2	61	2.1	4839	42.531	GKS14-3M □□□180C12	684
	34	1.2	41	1.2	59	1.1	4981	43.783	GKS11-3M □□□180C12	684
	31	2.1	37	2.1	54	2.0	5452	47.923	GKS14-3M □□□180C12	684
	30	1.1	36	1.1	52	1.0	5612	49.333	GKS11-3M □□□180C12	684
	26	0.9	31	0.9	45	0.9	6562	57.683	GKS11-3M □□□180C12	684
	26	1.8	32	1.8	46	1.7	6400	56.251	GKS14-3M □□□180C12	684
	23	0.8	27	0.8			7394	64.995	GKS11-3M □□□180C12	684
	23	1.6	28	1.6	41	1.5	7211	63.382	GKS14-3M □□□180C12	684
	21	1.5	26	1.5	38	1.4	7843	68.942	GKS14-3M □□□180C12	684
	19	1.3	23	1.3	33	1.2	8838	77.681	GKS14-3M □□□180C12	684
	16	1.1	20	1.1	29	1.1	10302	90.551	GKS14-3M □□□180C12	684
	15	0.9	18	0.9	27	0.9	10900	97.467	GKS14-4M □□□180C12	692
	15	1.0	17	1.0	25	1.0	11607	102.029	GKS14-3M □□□180C12	684
	13	0.9	16	0.9	24	0.8	12282	109.822	GKS14-4M □□□180C12	692
	13	0.9	16	0.9	24	0.9	12502	109.896	GKS14-3M □□□180C12	684

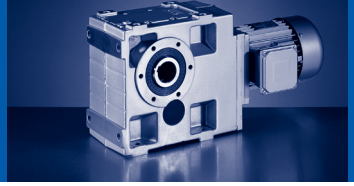

50 Hz: P_N=18.5 kW
60 Hz: P_N=22.2 kW
87 Hz: P_N=32.5 kW

n_N	1475 r/min		1775 r/min		2585 r/min		M_2 [Nm]	i		
f_N	50 Hz		60 Hz		87 Hz					
P_N	18.5 kW		22.2 kW		32.5 kW					
	n_2 [r/min]	c	n_2 [r/min]	c	n_2 [r/min]	c				
	12	0.8	15	0.8	22	0.8	13363	119.493	GKS14-4M □□□180C12	692
	12	0.8	14	0.8	21	0.8	14087	123.826	GKS14-3M □□□180C12	684

50 Hz: P_N=22.0 kW
60 Hz: P_N=26.4 kW
87 Hz: P_N=38.7 kW

n_N	1470 r/min		1770 r/min		2580 r/min		M_2 [Nm]	i		
f_N	50 Hz		60 Hz		87 Hz					
P_N	22.0 kW		26.4 kW		38.7 kW					
	n_2 [r/min]	c	n_2 [r/min]	c	n_2 [r/min]	c				
	122	1.7	146	1.6	213	1.4	1642	12.094	GKS11-3M □□□180C32	684
	120	1.0	144	0.9	210	0.8	1667	12.283	GKS09-3M □□□180C32	684
	112	1.7	135	1.6	196	1.4	1786	13.154	GKS11-3M □□□180C32	684
	110	1.0	133	0.9	193	0.8	1814	13.360	GKS09-3M □□□180C32	684
	93	1.4	112	1.4	163	1.2	2155	15.874	GKS11-3M □□□180C32	684
	91	0.8					2189	16.122	GKS09-3M □□□180C32	684
	88	2.6	106	2.5	155	2.2	2260	16.646	GKS14-3M □□□180C32	684
	85	1.4	103	1.4	149	1.2	2344	17.265	GKS11-3M □□□180C32	684
	84	0.8					2380	17.536	GKS09-3M □□□180C32	684
	80	2.5	97	2.3	141	2.1	2486	18.311	GKS14-3M □□□180C32	684
	75	1.0	91	0.9	132	0.8	2653	19.541	GKS09-3M □□□180C32	684
	75	1.7	91	1.6	132	1.4	2649	19.515	GKS11-3M □□□180C32	684
	67	0.9	80	0.9			2990	22.022	GKS09-3M □□□180C32	684
	67	1.6	81	1.6	117	1.4	2985	21.989	GKS11-3M □□□180C32	684
	60	2.6	72	2.5	105	2.2	3352	24.696	GKS14-3M □□□180C32	684
	57	0.8					3482	25.649	GKS09-3M □□□180C32	684
	57	1.4	69	1.4	101	1.2	3477	25.615	GKS11-3M □□□180C32	684
	54	2.5	65	2.3	95	2.1	3688	27.165	GKS14-3M □□□180C32	684
	53	1.4	63	1.3	92	1.1	3804	28.021	GKS11-3M □□□180C32	684
	48	2.4	58	2.3	84	2.0	4155	30.609	GKS14-3M □□□180C32	684
	47	1.3	56	1.2	82	1.1	4286	31.573	GKS11-3M □□□180C32	684
	42	2.1	51	2.0	74	1.8	4709	34.692	GKS14-3M □□□180C32	684
	41	1.2	50	1.1	72	1.0	4852	35.741	GKS11-3M □□□180C32	684
	38	2.1	45	2.0	66	1.7	5306	39.089	GKS14-3M □□□180C32	684
	37	1.1	44	1.0	64	0.9	5467	40.272	GKS11-3M □□□180C32	684
	35	1.9	42	1.9	61	1.8	5774	42.531	GKS14-3M □□□180C32	684
	34	1.0	40	1.0	59	0.9	5944	43.783	GKS11-3M □□□180C32	684
	31	1.7	37	1.7	54	1.6	6506	47.923	GKS14-3M □□□180C32	684
	30	0.9	36	0.9	52	0.8	6697	49.333	GKS11-3M □□□180C32	684
	26	1.5	32	1.5	46	1.4	7636	56.251	GKS14-3M □□□180C32	684
	23	1.3	28	1.3	41	1.3	8604	63.382	GKS14-3M □□□180C32	684
	21	1.2	26	1.2	37	1.2	9359	68.942	GKS14-3M □□□180C32	684
	19	1.1	23	1.1	33	1.0	10545	77.681	GKS14-3M □□□180C32	684
	16	0.9	20	0.9	29	0.9	12292	90.551	GKS14-3M □□□180C32	684
	14	0.8	17	0.8			13850	102.029	GKS14-3M □□□180C32	684

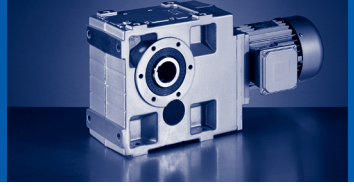

50 Hz: P_N=30.0 kW
60 Hz: P_N=36.0 kW
87 Hz: P_N=52.7 kW

n_N	1465 r/min		1765 r/min		2575 r/min		M_2 [Nm]	i		
f_N	50 Hz		60 Hz		87 Hz					
P_N	30.0 kW		36.0 kW		52.7 kW					
	n_2 [r/min]	c	n_2 [r/min]	c	n_2 [r/min]	c				
	121	1.2	146	1.2			2246	12.094	GKS11-3M □□□180C42	684
	111	1.2	134	1.2			2443	13.154	GKS11-3M □□□180C42	684
	92	1.1	111	1.0			2949	15.874	GKS11-3M □□□180C42	684
	88	1.9	106	1.8			3092	16.646	GKS14-3M □□□180C42	684
	85	1.1	102	1.0			3207	17.265	GKS11-3M □□□180C42	684
	80	1.8	96	1.7			3401	18.311	GKS14-3M □□□180C42	684
	75	1.2	90	1.2			3625	19.515	GKS11-3M □□□180C42	684
	67	1.2	80	1.1			4084	21.989	GKS11-3M □□□180C42	684
	59	1.9	72	1.8			4587	24.696	GKS14-3M □□□180C42	684
	57	1.1	69	1.0			4758	25.615	GKS11-3M □□□180C42	684
	54	1.8	65	1.7			5046	27.165	GKS14-3M □□□180C42	684
	52	1.0	63	0.9			5205	28.021	GKS11-3M □□□180C42	684
	48	1.8	58	1.7			5685	30.609	GKS14-3M □□□180C42	684
	46	0.9	56	0.9			5865	31.573	GKS11-3M □□□180C42	684
	42	1.6	51	1.5			6444	34.692	GKS14-3M □□□180C42	684
	41	0.9	49	0.8			6639	35.741	GKS11-3M □□□180C42	684
	38	1.5	45	1.4			7261	39.089	GKS14-3M □□□180C42	684
	34	1.4	42	1.4			7900	42.531	GKS14-3M □□□180C42	684
	31	1.3	37	1.3			8901	47.923	GKS14-3M □□□180C42	684
	26	1.1	31	1.1			10448	56.251	GKS14-3M □□□180C42	684
	23	1.0	28	1.0			11773	63.382	GKS14-3M □□□180C42	684
	21	0.9	26	0.9			12806	68.942	GKS14-3M □□□180C42	684

50 Hz: P_N=37.0 kW
60 Hz: P_N=45.0 kW
87 Hz: P_N=64.0 kW

n_N	1483 r/min		1783 r/min		2593 r/min		M_2 [Nm]	i		
f_N	50 Hz		60 Hz		87 Hz					
P_N	37.0 kW		45.0 kW		64.0 kW					
	n_2 [r/min]	c	n_2 [r/min]	c	n_2 [r/min]	c				
	123	1.0	147	1.0			2737	12.094	GKS11-3M □□□225C12	684
	119	1.8	143	1.7			2814	12.435	GKS14-3M □□□225C12	684
	113	1.0	136	1.0			2977	13.154	GKS11-3M □□□225C12	684
	110	1.8	132	1.7			3061	13.525	GKS14-3M □□□225C12	684
	93	0.9	112	0.8			3592	15.874	GKS11-3M □□□225C12	684
	89	1.6	107	1.5			3767	16.646	GKS14-3M □□□225C12	684
	86	0.9	103	0.8			3907	17.265	GKS11-3M □□□225C12	684
	81	1.5	97	1.4			4144	18.311	GKS14-3M □□□225C12	684
	76	1.0	91	1.0			4416	19.515	GKS11-3M □□□225C12	684
	74	1.8	89	1.7			4541	20.065	GKS14-3M □□□225C12	684
	67	1.0	81	0.9			4976	21.989	GKS11-3M □□□225C12	684
	66	1.8	79	1.7			5116	22.609	GKS14-3M □□□225C12	684
	60	1.6	72	1.5			5589	24.696	GKS14-3M □□□225C12	684
	58	0.9	70	0.8			5797	25.615	GKS11-3M □□□225C12	684
	55	1.5	66	1.4			6148	27.165	GKS14-3M □□□225C12	684
	53	0.8					6341	28.021	GKS11-3M □□□225C12	684
	49	1.5	58	1.4			6927	30.609	GKS14-3M □□□225C12	684
	43	1.3	51	1.2			7851	34.692	GKS14-3M □□□225C12	684
	38	1.2	46	1.2			8846	39.089	GKS14-3M □□□225C12	684
	35	1.1	42	1.1			9625	42.531	GKS14-3M □□□225C12	684
	31	1.0	37	1.0			10845	47.923	GKS14-3M □□□225C12	684
	26	0.9	32	0.9			12730	56.251	GKS14-3M □□□225C12	684
	23	0.8	28	0.8			14344	63.382	GKS14-3M □□□225C12	684

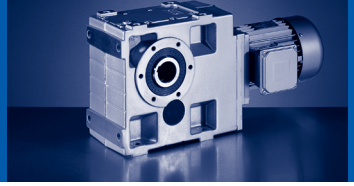

50 Hz: P_N=45.0 kW
60 Hz: P_N=54.0 kW
87 Hz: P_N=78.0 kW

n_N	1480 r/min		1780 r/min		2590 r/min		M_2 [Nm]	i		
f_N	50 Hz		60 Hz		87 Hz					
P_N	45.0 kW		54.0 kW		78.0 kW					
	n_2 [r/min]	c	n_2 [r/min]	c	n_2 [r/min]	c				
	122	0.8					3335	12.094	GKS11-3M □□□225C22	684
	119	1.5	143	1.4			3429	12.435	GKS14-3M □□□225C22	684
	113	0.8					3628	13.154	GKS11-3M □□□225C22	684
	109	1.5	132	1.4			3730	13.525	GKS14-3M □□□225C22	684
	89	1.3	107	1.2			4591	16.646	GKS14-3M □□□225C22	684
	81	1.2	97	1.2			5050	18.311	GKS14-3M □□□225C22	684
	76	0.8					5382	19.515	GKS11-3M □□□225C22	684
	74	1.5	89	1.4			5534	20.065	GKS14-3M □□□225C22	684
	67	0.8					6064	21.989	GKS11-3M □□□225C22	684
	66	1.5	79	1.4			6235	22.609	GKS14-3M □□□225C22	684
	60	1.3	72	1.2			6811	24.696	GKS14-3M □□□225C22	684
	55	1.2	66	1.2			7492	27.165	GKS14-3M □□□225C22	684
	48	1.2	58	1.1			8442	30.609	GKS14-3M □□□225C22	684
	43	1.1	51	1.0			9568	34.692	GKS14-3M □□□225C22	684
	38	1.0	46	1.0			10781	39.089	GKS14-3M □□□225C22	684
	35	0.9	42	0.9			11730	42.531	GKS14-3M □□□225C22	684
	31	0.9	37	0.9			13217	47.923	GKS14-3M □□□225C22	684

GKS□□-3M H□R

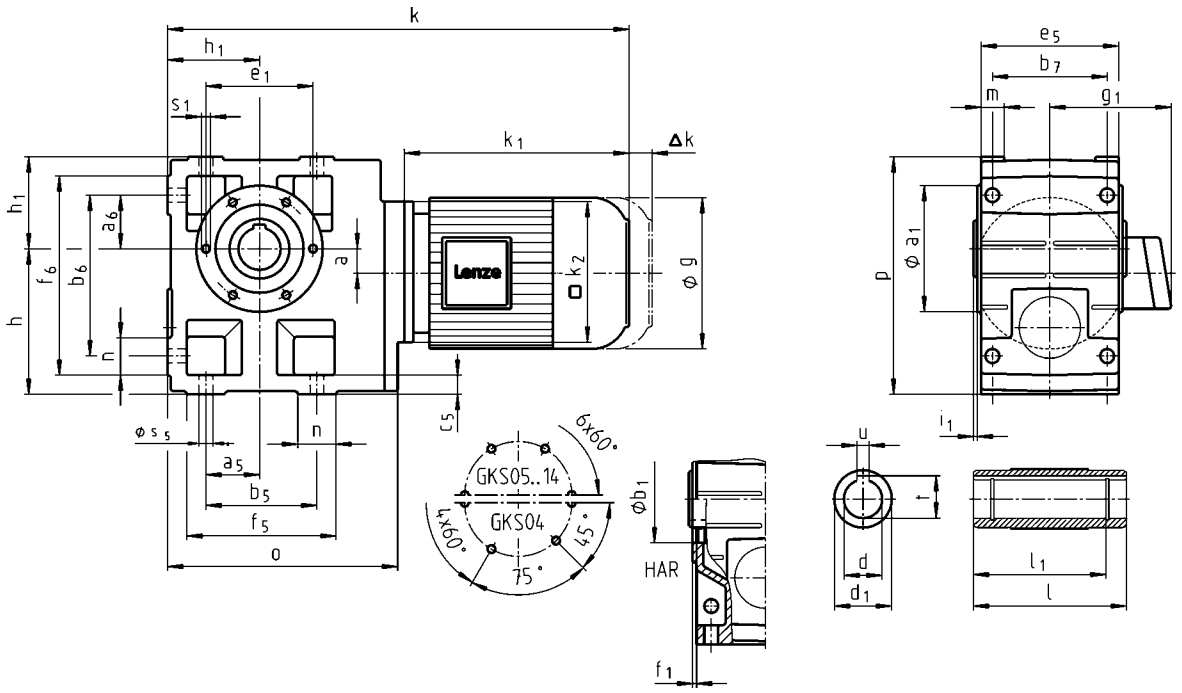

		063C11 063C12 063C31 063C32	063C42	071C11 071C13 071C31 071C32 071C33 071C42	080C11 080C13 080C31 080C32 080C33 080C42	090C11 090C31	090C32	100C12 100C31 100C32 100C41
g		123		139	156	176		194
g_1	MDEMAXX	100		109	141	146		157
	MDEMABR	107		118	132	137		147
k_1	MDEMAXX	187		207	224.5	274	248	309
k_2		120			145	180		
Δ k	MDEMABR	40		52	73	68		76
	MDFMAXX	128						109
	MDFMABR	170		165	183	181		170
					k			
GKS04		399		419	441	501	475	
GKS05			419	439	461	521	495	556
GKS06			475	495	517	577	551	612
GKS07					573	633	607	668
GKS09						704	678	739
GKS11								830

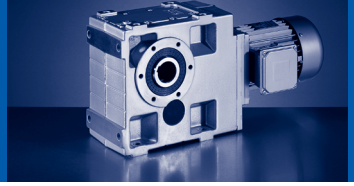

		112C22 112C31	112C32 112C41	132C21 132C22 132C32	160C22	160C32	180C12 180C32	180C42	225C12 225C22
g		218		258	310		348		447
g_1	MDEMAXX	167		195	210		230		346
	MDEMABR	158		187	210		230		346
k_1	MDEMAXX	319	363	403	457.5	501.5	561	618	848
k_2		222		265	300				
Δ k	MDEMABR	90		109.5	105		113		
	MDFMAXX	102		115	149			155	213
	MDFMABR	183		201.5	179		215		213
		k							
GKS06		628	672						
GKS07		684	728	776	835	879			
GKS09		755	799	847	906	950	1010		
GKS11		846	890	938	997	1041	1101	1158	1388
GKS14		945	989	1037	1096	1140	1200	1257	1487

	a	h[1)]	h_1	o	p[1)]
GKS04	20	100	71	203	171
GKS05	23	125	80	232	205
GKS06	28	150	100	291	250
GKS07	34	190	120	354	310
GKS09	41	236	150	429	386
GKS11	54	300	185	527	485
GKS14	67	375	230	636	605

	d	d_1	l[1)]	l_1	u	t	i_1	a_1	b_1	e_1	f_1	s_1
	H7				JS9	+0,2			H7			
GKS04	25 30	45 45	115 115	100 100	8 8	28.3 33.3	2.5 2.5	104	75	90	3	M6x12
GKS05	30 35	50 50	140 140	124 124	8 10	33.3 38.3	4 4	118	80	100	4	M8x15
GKS06	40 45	65 65	160 160	140 140	12 14	43.3 48.8	5 5	140	100	120	4	M10x16
GKS07	50 55	75 75	200 200	175 175	14 16	53.8 59.3	5 5	165	115	140	5	M12x18
GKS09	60 70	95 95	240 240	210 210	18 20	64.4 74.9	5 5	205	145	175	6	M16x24
GKS11	70 80	105 105	290 290	250 250	20 22	74.9 85.4	6 6	240	140	205	6	M20x32
GKS14	100	135	350	305	28	106.4	7	290	170	250	6	M24x35

	a_5	a_6	b_5	b_6	b_7	c_5	e_5	f_5	f_6	m	n	s_5
GKS04	45	45	110	119	85	14	105	132	141	21	22	9
GKS05	47.5	47.5	115	140	105	17	127	144	169	21	29	11
GKS06	60	60	155	170	120	20	145	191	206	23	36	14
GKS07	70	70	190	210	150	25	180	235	255	28	45	18
GKS09	90	90	240	266	185	30	222	300	326	37	60	22
GKS11	105	105	290	325	225	40	270	363	398	43	73	26
GKS14	135	135	360	415	275	50	328	442	497	52	82	33

[1)] k_2 !

GKS□□-3M HAK

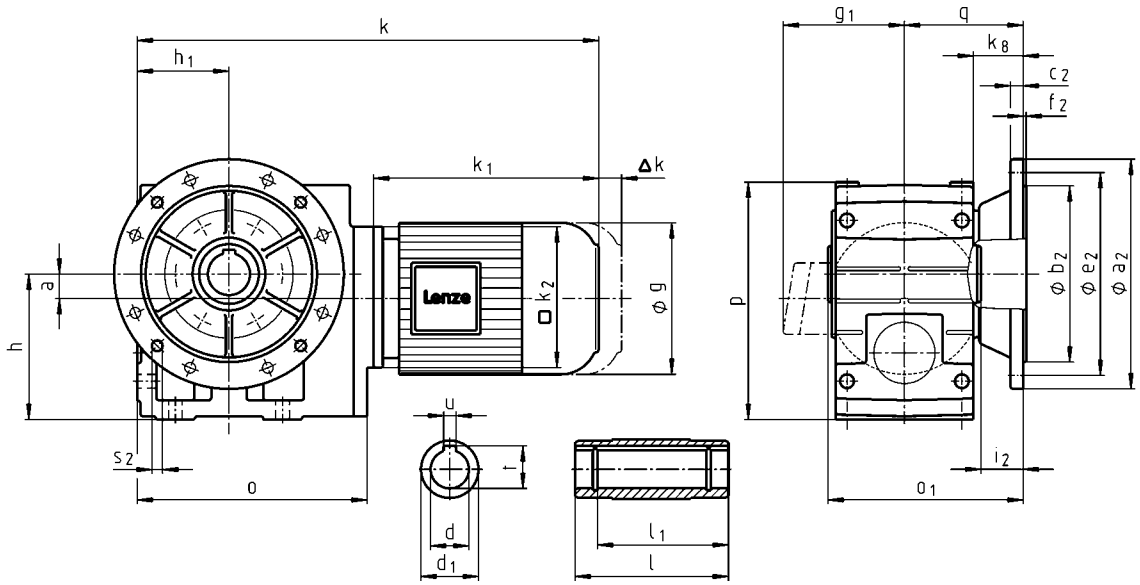

		063C11 063C12 063C31 063C32	063C42	071C11 071C13 071C31 071C32 071C33 071C42	080C11 080C13 080C31 080C32 080C33 080C42	090C11 090C31	090C32	100C12 100C31 100C32 100C41
g		123		139	156	176		194
g_1	MDEMAXX	100		109	141	146		157
	MDEMABR	107		118	132	137		147
k_1	MDEMAXX	187		207	224.5	274	248	309
k_2		120			145	180		
Δ k	MDEMABR	40		52	73	68		76
	MDFMAXX	128						109
	MDFMABR	170		165	183	181		170
					k			
GKS04		399		419	441	501	475	
GKS05			419	439	461	521	495	556
GKS06			475	495	517	577	551	612
GKS07					573	633	607	668
GKS09						704	678	739
GKS11								830

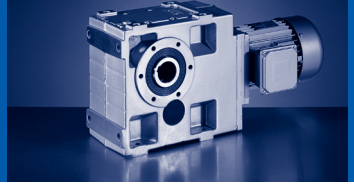

		112C22 112C31	112C32 112C41	132C21 132C22 132C32	160C22	160C32	180C12 180C32	180C42	225C12 225C22
g		218		258	310		348		447
g_1	MDEMAXX	167		195	210		230		346
	MDEMABR	158		187	210		230		346
k_1	MDEMAXX	319	363	403	457.5	501.5	561	618	848
k_2		222		265	300				
Δ k	MDEMABR	90		109.5	105		113		
	MDFMAXX	102		115	149			155	213
	MDFMABR	183		201.5	179		215		213
		k							
GKS06		628	672						
GKS07		684	728	776	835	879			
GKS09		755	799	847	906	950	1010		
GKS11		846	890	938	997	1041	1101	1158	1388
GKS14		945	989	1037	1096	1140	1200	1257	1487

	a	h[1)]	h_1	k_8	o	p[1)]	q
GKS04	20	100	71	38.5	203	171	91
GKS05	23	125	80	40	232	205	103.5
GKS06	28	150	100	49	291	250	121.5
GKS07	34	190	120	65.5	354	310	155.5
GKS09	41	236	150	69.5	429	386	180.5
GKS11	54	300	185	70.5	527	485	205.5
GKS14	67	375	230	71.5	636	605	235.5

	d	d_1	l	l_1	u	t	i_2	o_1[1)]	a_2	b_2	c_2	e_2	f_2	s_2
	H7				JS9	+0,2				j7				
GKS04	25 30	45 45	115 115	100 100	8 8	28.3 33.3	33 33	148.5 148.5	160	110	10	130	3.5	4 x 9
GKS05	30 35	50 50	140 140	124 124	8 10	33.3 38.3	33 33	173.5 173.5	200	130	12	165	4	4 x 11
GKS06	40 45	65 65	160 160	140 140	12 14	43.3 48.8	42 41	201.5 201.5	200 250	180 130	12 15	165 215	3.5 4	4 x 11 4 x 14
GKS07	50 55	75 75	200 200	175 175	14 16	53.8 59.3	55 55	255.5 255.5	250 300	180 230	15 17	215 265	4 4	4 x 14 4 x 14
GKS09	60 70	95 95	240 240	210 210	18 20	64.4 74.9	60 60	300.5 300.5	350	250	18	300	4	4 x 17.5
GKS11	70 80	105 105	290 290	250 250	20 22	74.9 85.4	60 60	350.5 350.5	400 450	300 350	20 22	350 400	5 5	4 x 17.5 8 x 17.5
GKS14	100	135	350	305	28	106.4	60	410.5	450	350	22	400	5	8 x 18.5

[1)] k_2 !

GKS□□-3M V□R

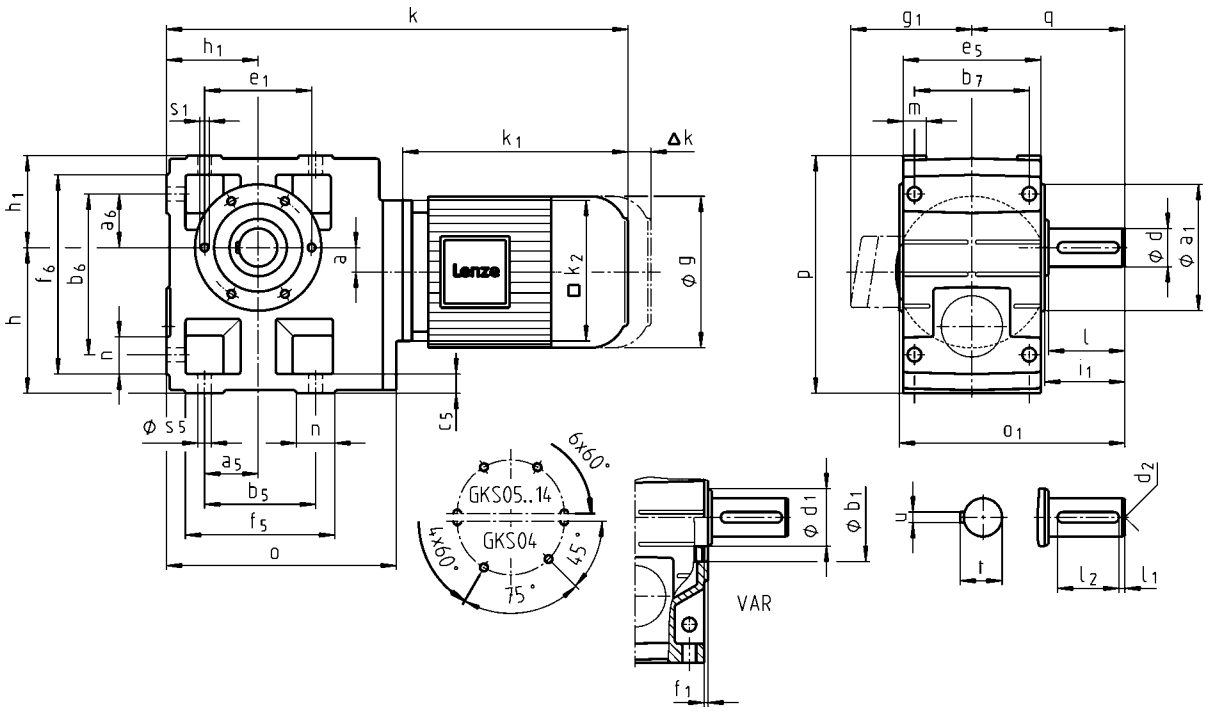

		063C11 063C12 063C31 063C32	063C42	071C11 071C13 071C31 071C32 071C33 071C42	080C11 080C13 080C31 080C32 080C33 080C42	090C11 090C31	090C32	100C12 100C31 100C32 100C41
g		123		139	156	176		194
g_1	MDEMAXX	100		109	141	146		157
	MDEMABR	107		118	132	137		147
k_1	MDEMAXX	187		207	224.5	274	248	309
k_2		120			145	180		
Δ k	MDEMABR	40		52	73	68		76
	MDFMAXX	128						109
	MDFMABR	170		165	183	181		170
					k			
GKS04		399		419	441	501	475	
GKS05			419	439	461	521	495	556
GKS06			475	495	517	577	551	612
GKS07					573	633	607	668
GKS09						704	678	739
GKS11								830

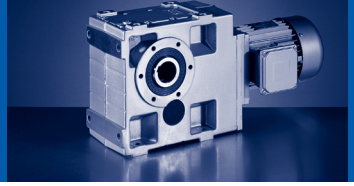

		112C22 112C31	112C32 112C41	132C21 132C22 132C32	160C22	160C32	180C12 180C32	180C42	225C12 225C22
g		218		258	310		348		447
g_1	MDEMAXX	167		195	210		230		346
	MDEMABR	158		187	210		230		346
k_1	MDEMAXX	319	363	403	457.5	501.5	561	618	848
k_2		222		265	300				
Δ k	MDEMABR	90		109.5	105		113		
	MDFMAXX	102		115	149			155	213
	MDFMABR	183		201.5	179		215		213
		k							
GKS06		628	672						
GKS07		684	728	776	835	879			
GKS09		755	799	847	906	950	1010		
GKS11		846	890	938	997	1041	1101	1158	1388
GKS14		945	989	1037	1096	1140	1200	1257	1487

	a	h[1)]	h_1	o	p[1)]	q
GKS04	20	100	71	203	171	107.5
GKS05	23	125	80	232	205	130
GKS06	28	150	100	291	250	160
GKS07	34	190	120	354	310	200
GKS09	41	236	150	429	386	240
GKS11	54	300	185	527	485	305
GKS14	67	375	230	636	605	375

	d	d	d_1	d_2	l	l_1	l_2	u	t	i_1	o_1[1)]	a_1	b_1	e_1	f_1	s_1
	k6	m6											H7			
GKS04	25		45	M10	50	6	40	8	28	52.5	162.5	104	75	90	3	M6x12
GKS05	30		45	M10	60	6	45	8	33	64	196.5	118	80	100	4	M8x15
GKS06	40		65	M16	80	7	63	12	43	85	235.5	140	100	120	4	M10x16
GKS07	50		75	M16	100	8	80	14	53.5	105	295.5	165	115	140	5	M12x18
GKS09		60	95	M20	120	8	100	18	64	125	355.5	205	145	175	6	M16x24
GKS11		80	105	M20	160	15	125	22	85	166	444.5	240	140	205	6	M20x32
GKS14		100	135	M24	200	18	160	28	106	207	543.5	290	170	250	6	M24x35

	a_5	a_6	b_5	b_6	b_7	c_5	e_5	f_5	f_6	m	n	s_5
GKS04	45	45	110	119	85	14	105	132	141	21	22	9
GKS05	47.5	47.5	115	140	105	17	127	144	169	21	29	11
GKS06	60	60	155	170	120	20	145	191	206	23	36	14
GKS07	70	70	190	210	150	25	180	235	255	28	45	18
GKS09	90	90	240	266	185	30	222	300	326	37	60	22
GKS11	105	105	290	325	225	40	270	363	398	43	73	26
GKS14	135	135	360	415	275	50	328	442	497	52	82	33

[1)] k_2 !

GKS□□-3M VAK

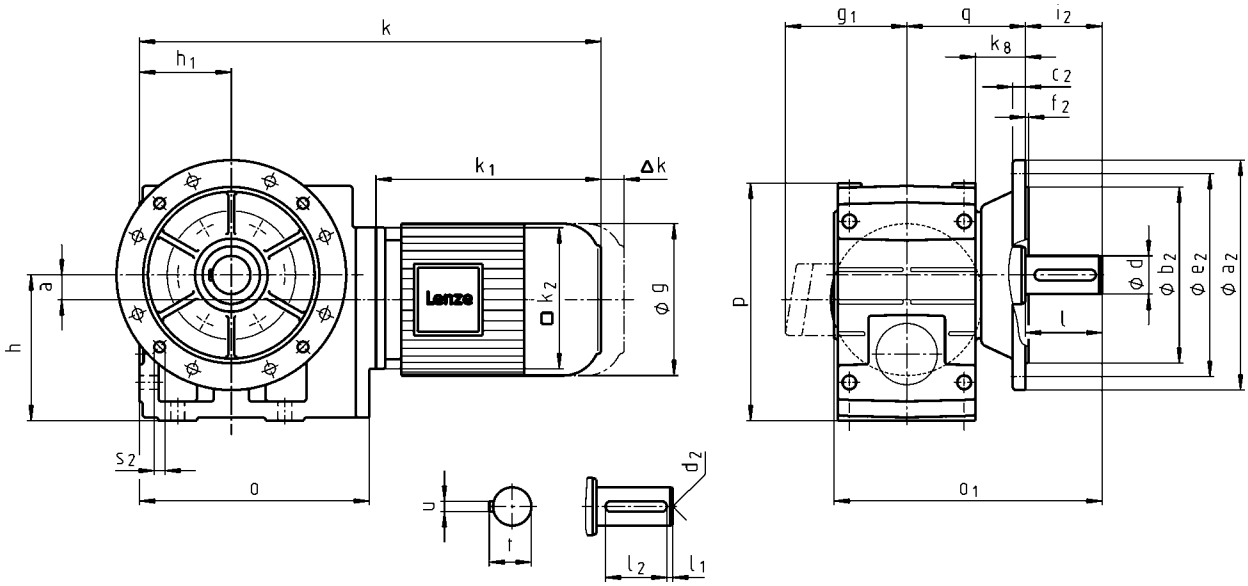

		063C11 063C12 063C31 063C32	063C42	071C11 071C13 071C31 071C32 071C33 071C42	080C11 080C13 080C31 080C32 080C33 080C42	090C11 090C31	090C32	100C12 100C31 100C32 100C41
g		123		139	156	176		194
g_1	MDEMAXX	100		109	141	146		157
	MDEMABR	107		118	132	137		147
k_1	MDEMAXX	187		207	224.5	274	248	309
k_2		120			145	180		
Δ k	MDEMABR	40		52	73	68		76
	MDFMAXX	128						109
	MDFMABR	170		165	183	181		170
		k						
GKS04		399		419	441	501	475	
GKS05			419	439	461	521	495	556
GKS06			475	495	517	577	551	612
GKS07					573	633	607	668
GKS09						704	678	739
GKS11								830

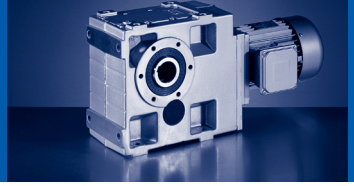

		112C22 112C31	112C32 112C41	132C21 132C22 132C32	160C22	160C32	180C12 180C32	180C42	225C12 225C22
g		218		258	310		348		447
g_1	MDEMAXX	167		195	210		230		346
	MDEMABR	158		187	210		230		346
k_1	MDEMAXX	319	363	403	457.5	501.5	561	618	848
k_2		222		265	300				
Δ k	MDEMABR	90		109.5	105		113		
	MDFMAXX	102		115	149			155	213
	MDFMABR	183		201.5	179		215		213
		k							
GKS06		628	672						
GKS07		684	728	776	835	879			
GKS09		755	799	847	906	950	1010		
GKS11		846	890	938	997	1041	1101	1158	1388
GKS14		945	989	1037	1096	1140	1200	1257	1487

	a	h[1)]	h_1	k_8	o	p[1)]	q
GKS04	20	100	71	38.5	203	171	91
GKS05	23	125	80	40	232	205	103.5
GKS06	28	150	100	49	291	250	121.5
GKS07	34	190	120	65.5	354	310	155.5
GKS09	41	236	150	69.5	429	386	180.5
GKS11	54	300	185	70.5	527	485	205.5
GKS14	67	375	230	71.5	636	605	235.5

	d	d	d_2	l	l_1	l_2	u	t	i_2	o_1[1)]	a_2	b_2	c_2	e_2	f_2	s_2
	k6	m6										j7				
GKS04	25		M10	50	6	40	8	28	50	195.5	160	110	10	130	3.5	4 x 9
GKS05	30		M10	60	6	45	8	33	60	229.5	200	130	12	165	4	4 x 11
GKS06	40		M16	80	7	63	12	43	80	276.5	250	180	15	215	4	4 x 14
GKS07	50		M16	100	8	80	14	53.5	100	350.5	250 300	180 230	15 17	215 265	4 4	4 x 14 4 x 14
GKS09		60	M20	120	8	100	18	64	120	415.5	350	250	18	300	4	4 x 17.5
GKS11		80	M20	160	15	125	22	85	160	504.5	400 450	300 350	20 22	350 400	5 5	4 x 17.5 8 x 17.5
GKS14		100	M24	200	18	160	28	106	200	603.5	450	350	22	400	5	8 x 18.5

[1)] k_2 !

GKS□□-4M H□R

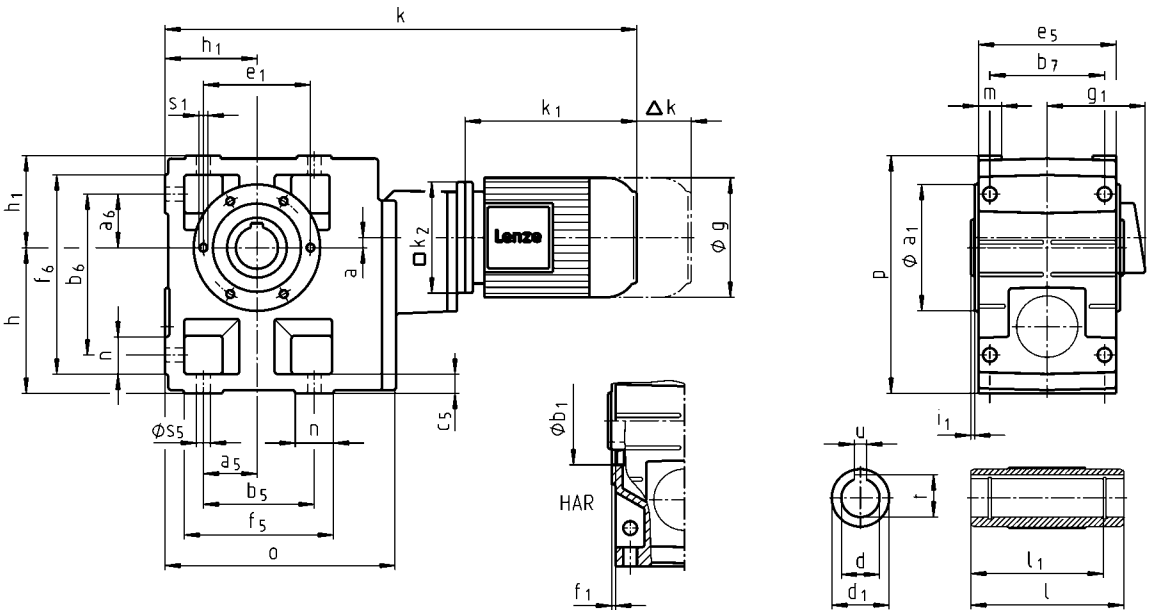

		063C11 063C12 063C31 063C32	063C42	071C11 071C13 071C31 071C32 071C33	071C42	080C11	080C13 080C31 080C32 080C33 080C42	090C11 090C31	090C32
g		123		139		156		176	
g_1	MDEMAXX	100		109		141		146	
	MDEMABR	107		118		132		137	
k_1	MDEMAXX	187		207		224.5		274	248
k_2		120				145		180	
Δ k	MDEMABR	40		52		73		68	
	MDFMAXX	128							
	MDFMABR	170		165		183		181	
		k							
GKS05		495		515		538			
GKS06		568		588		611		670	
GKS07			635	655		678		737	711
GKS09			724	744		767		826	800
GKS11						877		936	910
GKS14								1069	1043

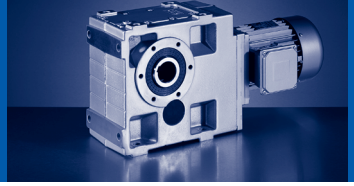

		100C12 100C31	100C32	100C41	112C22 112C31	112C32 112C41	132C21 132C22 132C32	160C22	160C32	180C12
g		194			218		258	310		348
g_1	MDEMAXX	157			167		195	210		230
	MDEMABR	147			158		187	210		230
k_1	MDEMAXX	309			319	363	403	457.5	501.5	561
k_2		180			222		265	300		
Δ k	MDEMABR	76			90		109.5	105		113
	MDFMAXX	109			102		115	149		
	MDFMABR	170			183		201.5	179		215
		k								
GKS07		772		772						
GKS09		861			877	921				
GKS11		971			987	1031	1079			
GKS14		1104			1120	1164	1212	1272	1316	1375

	a	h	h_1	o	p
GKS05	13	125	80	226	205
GKS06	8	150	100	288	250
GKS07	11	190	120	350.5	310
GKS09	15	236	150	426	386
GKS11	16	300	185	523	485
GKS14	22	375	230	632	605

	d	d_1	l	l_1	u	t	i_1	a_1	b_1	e_1	f_1	s_1
	H7				JS9	+0,2			H7			
GKS05	30 35	50 50	140 140	124 124	8 10	33.3 38.3	4 4	118	80	100	4	M8x15
GKS06	40 45	65 65	160 160	140 140	12 14	43.3 48.8	5 5	140	100	120	4	M10x16
GKS07	50 55	75 75	200 200	175 175	14 16	53.8 59.3	5 5	165	115	140	5	M12x18
GKS09	60 70	95 95	240 240	210 210	18 20	64.4 74.9	5 5	205	145	175	6	M16x24
GKS11	70 80	105 105	290 290	250 250	20 22	74.9 85.4	6 6	240	140	205	6	M20x32
GKS14	100	135	350	305	28	106.4	7	290	170	250	6	M24x35

	a_5	a_6	b_5	b_6	b_7	c_5	e_5	f_5	f_6	m	n	s_5
GKS05	47.5	47.5	115	140	105	17	127	144	169	21	29	11
GKS06	60	60	155	170	120	20	145	191	206	23	36	14
GKS07	70	70	190	210	150	25	180	235	255	28	45	18
GKS09	90	90	240	266	185	30	222	300	326	37	60	22
GKS11	105	105	290	325	225	40	270	363	398	43	73	26
GKS14	135	135	360	415	275	50	328	442	497	52	82	33

GKS□□-4M HAK

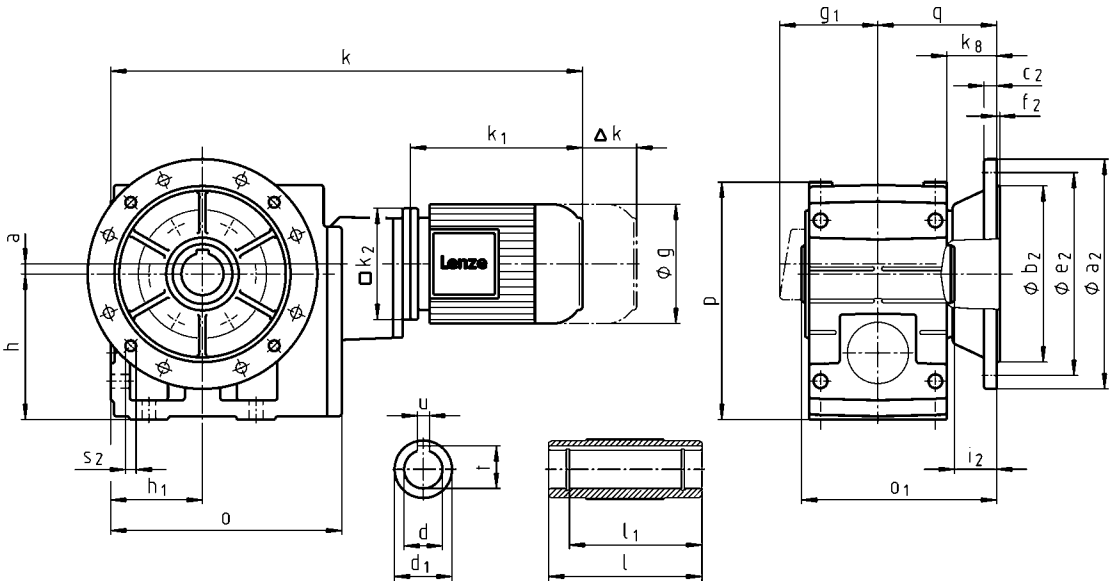

		063C11 063C12 063C31 063C32	063C42	071C11 071C13 071C31 071C32 071C33	071C42	080C11	080C13 080C31 080C32 080C33 080C42	090C11 090C31	090C32
g		123		139		156		176	
g_1	MDEMAXX	100		109		141		146	
	MDEMABR	107		118		132		137	
k_1	MDEMAXX	187		207		224.5		274	248
k_2		120				145		180	
Δ k	MDEMABR	40		52		73		68	
	MDFMAXX	128							
	MDFMABR	170		165		183		181	
		k							
GKS05		495		515		538			
GKS06		568		588		611		670	
GKS07			635	655		678		737	711
GKS09			724	744		767		826	800
GKS11						877		936	910
GKS14								1069	1043

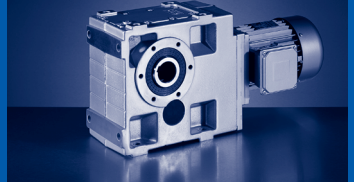

		100C12 100C31	100C32	100C41	112C22 112C31	112C32 112C41	132C21 132C22 132C32	160C22	160C32	180C12
g		194			218		258	310		348
g_1	MDEMAXX	157			167		195	210		230
	MDEMABR	147			158		187	210		230
k_1	MDEMAXX	309			319	363	403	457.5	501.5	561
k_2		180			222		265	300		
Δ k	MDEMABR	76			90		109.5	105		113
	MDFMAXX	109			102		115	149		
	MDFMABR	170			183		201.5	179		215
		k								
GKS07		772		772						
GKS09		861			877	921				
GKS11		971			987	1031	1079			
GKS14		1104			1120	1164	1212	1272	1316	1375

	a	h	h_1	k_8	o	p	q
GKS05	13	125	80	40	226	205	103.5
GKS06	8	150	100	49	288	250	121.5
GKS07	11	190	120	65.5	350.5	310	155.5
GKS09	15	236	150	69.5	426	386	180.5
GKS11	16	300	185	70.5	523	485	205.5
GKS14	22	375	230	71.5	632	605	235.5

	d	d_1	l	l_1	u	t	i_2	o_1	a_2	b_2	c_2	e_2	f_2	s_2
	H7				JS9	+0,2				j7				
GKS05	30 35	50 50	140 140	124 124	8 10	33.3 38.3	33 33	173.5 173.5	200	130	12	165	4	4 x 11
GKS06	40 45	65 65	160 160	140 140	12 14	43.3 48.8	42 41	201.5 201.5	200 250	180 130	12 15	165 215	3.5 4	4 x 11 4 x 14
GKS07	50 55	75 75	200 200	175 175	14 16	53.8 59.3	55 55	255.5 255.5	250 300	180 230	15 17	215 265	4 4	4 x 14 4 x 14
GKS09	60 70	95 95	240 240	210 210	18 20	64.4 74.9	60 60	300.5 300.5	350	250	18	300	4	4 x 17.5
GKS11	70 80	105 105	290 290	250 250	20 22	74.9 85.4	60 60	350.5 350.5	400 450	300 350	20 22	350 400	5 5	4 x 17.5 8 x 17.5
GKS14	100	135	350	305	28	106.4	60	410.5	450	350	22	400	5	8 x 18.5

GKS□□-4M V□R

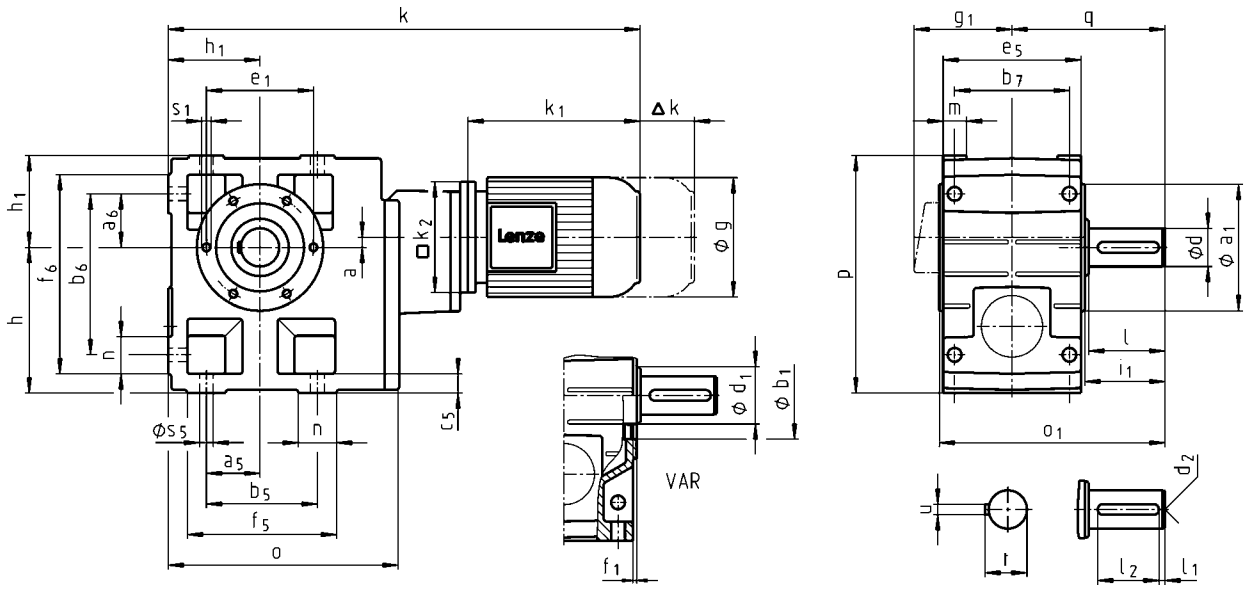

		063C11 063C12 063C31 063C32	063C42	071C11 071C13 071C31 071C32 071C33	071C42	080C11	080C13 080C31 080C32 080C33 080C42	090C11 090C31	090C32
g		123		139		156		176	
g_1	MDEMAXX	100		109		141		146	
	MDEMABR	107		118		132		137	
k_1	MDEMAXX	187		207		224.5		274	248
k_2		120				145		180	
Δ k	MDEMABR	40		52		73		68	
	MDFMAXX	128							
	MDFMABR	170		165		183		181	
		k							
GKS05		495		515		538			
GKS06		568		588		611		670	
GKS07			635	655		678		737	711
GKS09			724	744		767		826	800
GKS11						877		936	910
GKS14								1069	1043

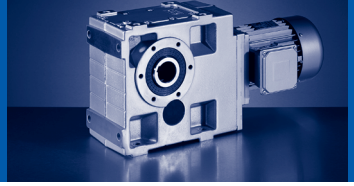

		100C12 100C31	100C32	100C41	112C22 112C31	112C32 112C41	132C21 132C22 132C32	160C22	160C32	180C12
g		194			218		258	310		348
g_1	MDEMAXX	157			167		195	210		230
	MDEMABR	147			158		187	210		230
k_1	MDEMAXX	309			319	363	403	457.5	501.5	561
k_2		180			222		265	300		
Δ k	MDEMABR	76			90		109.5	105		113
	MDFMAXX	109			102		115	149		
	MDFMABR	170			183		201.5	179		215
		k								
GKS07		772		772						
GKS09		861			877	921				
GKS11		971			987	1031	1079			
GKS14		1104			1120	1164	1212	1272	1316	1375

	a	h	h_1	o	p	q
GKS05	13	125	80	226	205	130
GKS06	8	150	100	288	250	160
GKS07	11	190	120	350.5	310	200
GKS09	15	236	150	426	386	240
GKS11	16	300	185	523	485	305
GKS14	22	375	230	632	605	375

	d	d	d_1	d_2	l	l_1	l_2	u	t	i_1	o_1	a_1	b_1	e_1	f_1	s_1
	k6	m6											H7			
GKS05	30		45	M10	60	6	45	8	33	64	196.5	118	80	100	4	M8x15
GKS06	40		65	M16	80	7	63	12	43	85	235.5	140	100	120	4	M10x16
GKS07	50		75	M16	100	8	80	14	53.5	105	295.5	165	115	140	5	M12x18
GKS09		60	95	M20	120	8	100	18	64	125	355.5	205	145	175	6	M16x24
GKS11		80	105	M20	160	15	125	22	85	166	444.5	240	140	205	6	M20x32
GKS14		100	135	M24	200	18	160	28	106	207	543.5	290	170	250	6	M24x35

	a_5	a_6	b_5	b_6	b_7	c_5	e_5	f_5	f_6	m	n	s_5
GKS05	47.5	47.5	115	140	105	17	127	144	169	21	29	11
GKS06	60	60	155	170	120	20	145	191	206	23	36	14
GKS07	70	70	190	210	150	25	180	235	255	28	45	18
GKS09	90	90	240	266	185	30	222	300	326	37	60	22
GKS11	105	105	290	325	225	40	270	363	398	43	73	26
GKS14	135	135	360	415	275	50	328	442	497	52	82	33

GKS□□-4M VAK

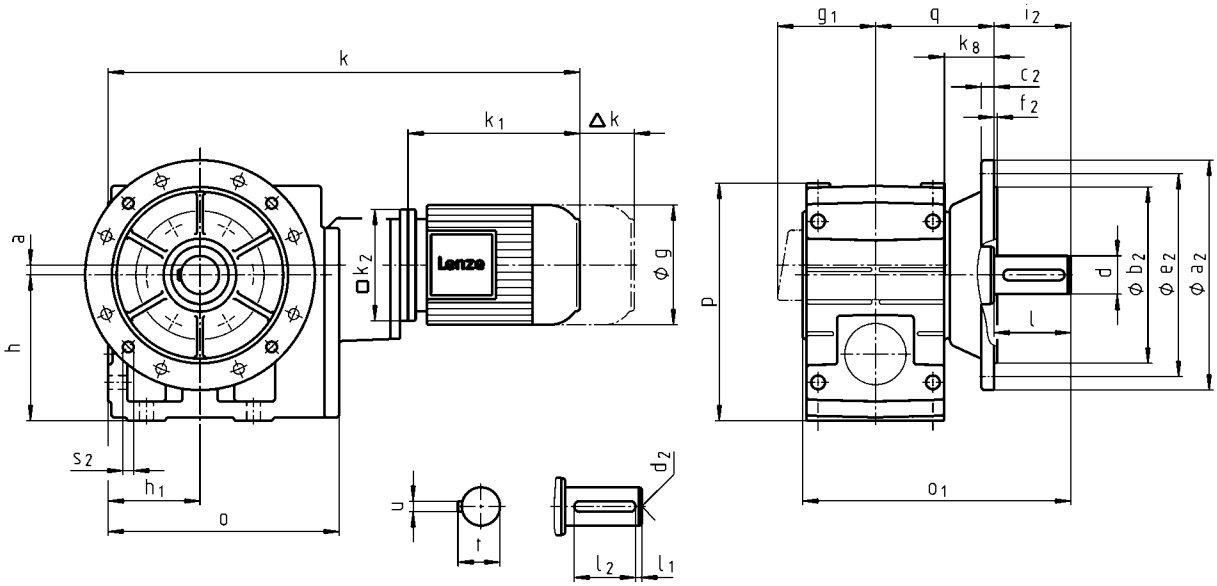

		063C11 063C12 063C31 063C32	063C42	071C11 071C13 071C31 071C32 071C33	071C42	080C11	080C13 080C31 080C32 080C33 080C42	090C11 090C31	090C32
g		123		139		156		176	
g_1	MDEMAXX	100		109		141		146	
	MDEMABR	107		118		132		137	
k_1	MDEMAXX	187		207		224.5		274	248
k_2		120				145		180	
Δ k	MDEMABR	40		52		73		68	
	MDFMAXX	128							
	MDFMABR	170		165		183		181	
		k							
GKS05		495		515		538			
GKS06		568		588		611		670	
GKS07			635	655		678		737	711
GKS09			724	744		767		826	800
GKS11						877		936	910
GKS14								1069	1043

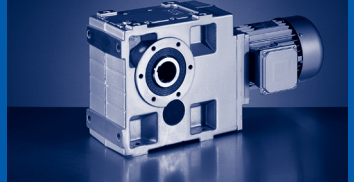

		100C12 100C31	100C32	100C41	112C22 112C31	112C32 112C41	132C21 132C22 132C32	160C22	160C32	180C12
g		194			218		258	310		348
g_1	MDEMAXX	157			167		195	210		230
	MDEMABR	147			158		187	210		230
k_1	MDEMAXX	309			319	363	403	457.5	501.5	561
k_2		180			222		265	300		
Δ k	MDEMABR	76			90		109.5	105		113
	MDFMAXX	109			102		115	149		
	MDFMABR	170			183		201.5	179		215
		k								
GKS07		772		772						
GKS09		861			877	921				
GKS11		971			987	1031	1079			
GKS14		1104			1120	1164	1212	1272	1316	1375

	a	h	h_1	k_8	o	p	q
GKS05	13	125	80	40	226	205	103.5
GKS06	8	150	100	49	288	250	121.5
GKS07	11	190	120	65.5	350.5	310	155.5
GKS09	15	236	150	69.5	426	386	180.5
GKS11	16	300	185	70.5	523	485	205.5
GKS14	22	375	230	71.5	632	605	235.5

	d	d	d_2	l	l_1	l_2	u	t	i_2	o_1	a_2	b_2	c_2	e_2	f_2	s_2
	k6	m6										j7				
GKS05	30		M10	60	6	45	8	33	60	229.5	200	130	12	165	4	4 x 11
GKS06	40		M16	80	7	63	12	43	80	276.5	250	180	15	215	4	4 x 14
GKS07	50		M16	100	8	80	14	53.5	100	350.5	250 300	180 230	15 17	215 265	4 4	4 x 14 4 x 14
GKS09		60	M20	120	8	100	18	64	120	415.5	350	250	18	300	4	4 x 17.5
GKS11		80	M20	160	15	125	22	85	160	504.5	400 450	300 350	20 22	350 400	5 5	4 x 17.5 8 x 17.5
GKS14		100	M24	200	18	160	28	106	200	603.5	450	350	22	400	5	8 x 18.5

GKS□□-3M H□R

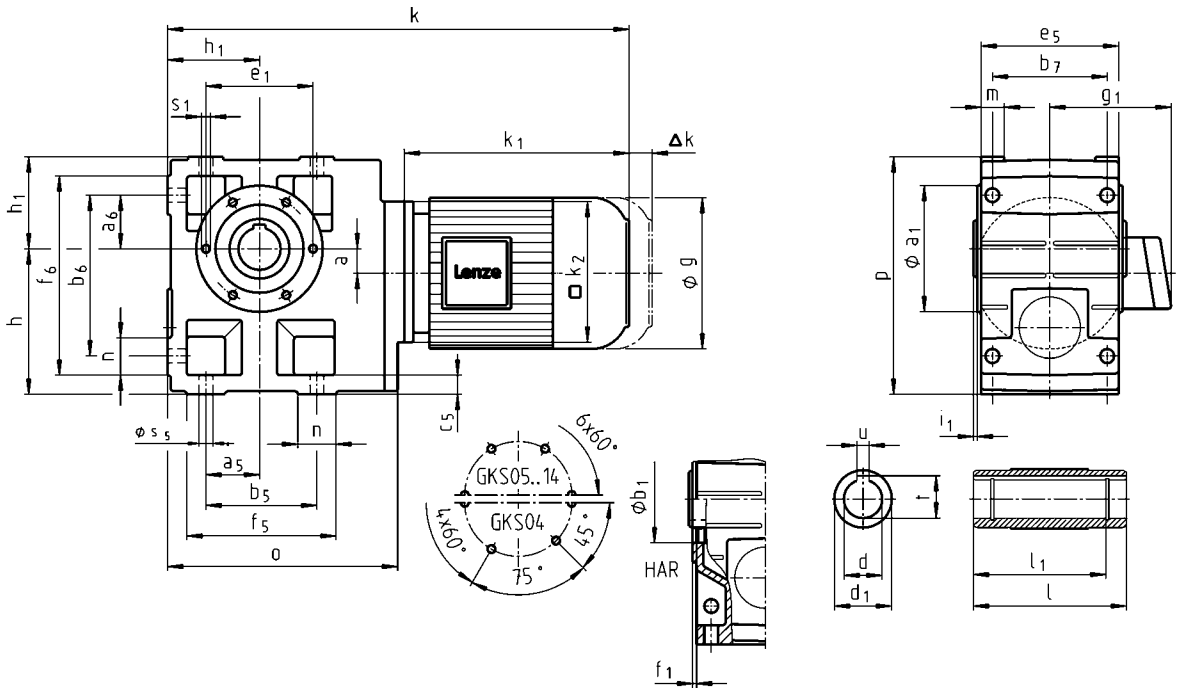

		080C32	090C12 090C32	100C12	100C32	112C22
g		156	176	194		218
g_1	MHEMAXX	141	146	157		167
	MHEMABR	132	137	147		158
k_1	MHEMAXX	224.5	274	309	324	363
k_2		145		180		222
Δ k	MHEMABR	73	68	76		90
	MHFMAXX	128		109		102
	MHFMABR	183	181	170		183
		k				
GKS04		441	501			
GKS05		461	521	556	571	
GKS06		517	577	612	627	672
GKS07		573	633	668	683	728
GKS09			704	739	754	799
GKS11				830	845	890
GKS14						989

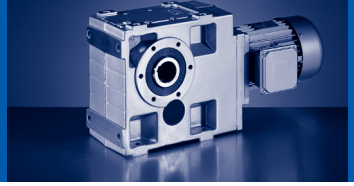

		132C12 132C22	160C22	160C32	180C12 180C32	180C42	225C12 225C22
g		258	310		348		447
g_1	MHEMAXX	195	210		230		346
	MHEMABR	187	210		230		346
k_1	MHEMAXX	403	457.5	501.5	561	618	848
k_2		265	300				
Δ k	MHEMABR	109.5	105		113		
	MHFMAXX	115	149			155	213
	MHFMABR	201.5	179		215		213
		k					
GKS06		720					
GKS07		776	835	879			
GKS09		847	906	950	1010		
GKS11		938	997	1041	1101	1158	1388
GKS14		1037	1096	1140	1200	1257	1487

	a	h[1)]	h_1	o	p[1)]
GKS04	20	100	71	203	171
GKS05	23	125	80	232	205
GKS06	28	150	100	291	250
GKS07	34	190	120	354	310
GKS09	41	236	150	429	386
GKS11	54	300	185	527	485
GKS14	67	375	230	636	605

	d	d_1	l[1)]	l_1	u	t	i_1	a_1	b_1	e_1	f_1	s_1
	H7				JS9	+0,2			H7			
GKS04	25 30	45 45	115 115	100 100	8 8	28.3 33.3	2.5 2.5	104	75	90	3	M6x12
GKS05	30 35	50 50	140 140	124 124	8 10	33.3 38.3	4 4	118	80	100	4	M8x15
GKS06	40 45	65 65	160 160	140 140	12 14	43.3 48.8	5 5	140	100	120	4	M10x16
GKS07	50 55	75 75	200 200	175 175	14 16	53.8 59.3	5 5	165	115	140	5	M12x18
GKS09	60 70	95 95	240 240	210 210	18 20	64.4 74.9	5 5	205	145	175	6	M16x24
GKS11	70 80	105 105	290 290	250 250	20 22	74.9 85.4	6 6	240	140	205	6	M20x32
GKS14	100	135	350	305	28	106.4	7	290	170	250	6	M24x35

	a_5	a_6	b_5	b_6	b_7	c_5	e_5	f_5	f_6	m	n	s_5
GKS04	45	45	110	119	85	14	105	132	141	21	22	9
GKS05	47.5	47.5	115	140	105	17	127	144	169	21	29	11
GKS06	60	60	155	170	120	20	145	191	206	23	36	14
GKS07	70	70	190	210	150	25	180	235	255	28	45	18
GKS09	90	90	240	266	185	30	222	300	326	37	60	22
GKS11	105	105	290	325	225	40	270	363	398	43	73	26
GKS14	135	135	360	415	275	50	328	442	497	52	82	33

[1)] k_2 !

GKS□□-3M HAK

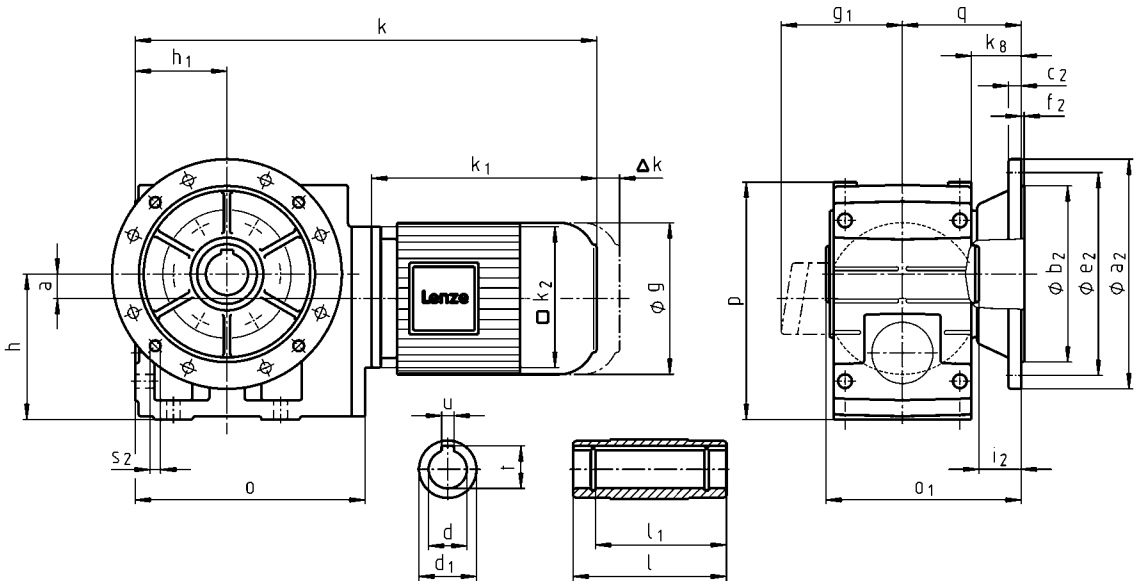

		080C32	090C12 090C32	100C12	100C32	112C22
g		156	176	194		218
g_1	MHEMAXX	141	146	157		167
	MHEMABR	132	137	147		158
k_1	MHEMAXX	224.5	274	309	324	363
k_2		145	180			222
Δ k	MHEMABR	73	68	76		90
	MHFMAXX	128		109		102
	MHFMABR	183	181	170		183
		k				
GKS04		441	501			
GKS05		461	521	556	571	
GKS06		517	577	612	627	672
GKS07		573	633	668	683	728
GKS09			704	739	754	799
GKS11				830	845	890
GKS14						989

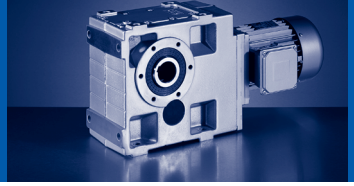

		132C12 132C22	160C22	160C32	180C12 180C32	180C42	225C12 225C22
g		258	310		348		447
g_1	MHEMAXX	195	210		230		346
	MHEMABR	187	210		230		346
k_1	MHEMAXX	403	457.5	501.5	561	618	848
k_2		265	300				
Δ k	MHEMABR	109.5	105		113		
	MHFMAXX	115	149			155	213
	MHFMABR	201.5	179		215		213
		k					
GKS06		720					
GKS07		776	835	879			
GKS09		847	906	950	1010		
GKS11		938	997	1041	1101	1158	1388
GKS14		1037	1096	1140	1200	1257	1487

	a	h[1)]	h_1	k_8	o	p[1)]	q
GKS04	20	100	71	38.5	203	171	91
GKS05	23	125	80	40	232	205	103.5
GKS06	28	150	100	49	291	250	121.5
GKS07	34	190	120	65.5	354	310	155.5
GKS09	41	236	150	69.5	429	386	180.5
GKS11	54	300	185	70.5	527	485	205.5
GKS14	67	375	230	71.5	636	605	235.5

	d	d_1	l	l_1	u	t	i_2	o_1[1)]	a_2	b_2	c_2	e_2	f_2	s_2
	H7				JS9	+0,2				j7				
GKS04	25 30	45 45	115 115	100 100	8 8	28.3 33.3	33 33	148.5 148.5	160	110	10	130	3.5	4 x 9
GKS05	30 35	50 50	140 140	124 124	8 10	33.3 38.3	33 33	173.5 173.5	200	130	12	165	4	4 x 11
GKS06	40 45	65 65	160 160	140 140	12 14	43.3 48.8	42 41	201.5 201.5	200 250	180 130	12 15	165 215	3.5 4	4 x 11 4 x 14
GKS07	50 55	75 75	200 200	175 175	14 16	53.8 59.3	55 55	255.5 255.5	250 300	180 230	15 17	215 265	4 4	4 x 14 4 x 14
GKS09	60 70	95 95	240 240	210 210	18 20	64.4 74.9	60 60	300.5 300.5	350	250	18	300	4	4 x 17.5
GKS11	70 80	105 105	290 290	250 250	20 22	74.9 85.4	60 60	350.5 350.5	400 450	300 350	20 22	350 400	5 5	4 x 17.5 8 x 17.5
GKS14	100	135	350	305	28	106.4	60	410.5	450	350	22	400	5	8 x 18.5

[1)] k_2 !

GKS□□-3M V□R

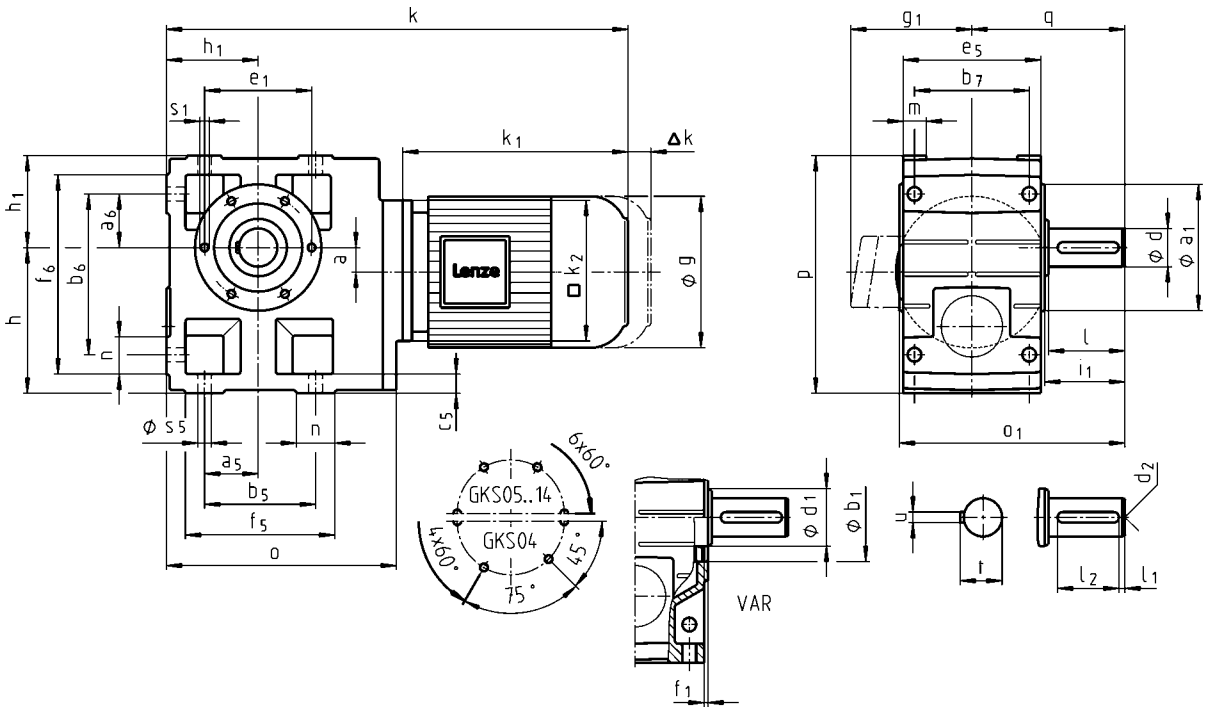

		080C32	090C12 090C32	100C12	100C32	112C22
g		156	176	194		218
g_1	MHEMAXX	141	146	157		167
	MHEMABR	132	137	147		158
k_1	MHEMAXX	224.5	274	309	324	363
k_2		145		180		222
Δ k	MHEMABR	73	68	76		90
	MHFMAXX	128		109		102
	MHFMABR	183	181	170		183
				k		
GKS04		441	501			
GKS05		461	521	556	571	
GKS06		517	577	612	627	672
GKS07		573	633	668	683	728
GKS09			704	739	754	799
GKS11				830	845	890
GKS14						989

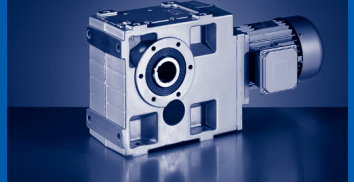

		132C12 132C22	160C22	160C32	180C12 180C32	180C42	225C12 225C22
g		258	310		348		447
g_1	MHEMAXX	195	210		230		346
	MHEMABR	187	210		230		346
k_1	MHEMAXX	403	457.5	501.5	561	618	848
k_2		265	300				
Δ k	MHEMABR	109.5	105		113		
	MHFMAXX	115	149			155	213
	MHFMABR	201.5	179		215		213
		k					
GKS06		720					
GKS07		776	835	879			
GKS09		847	906	950	1010		
GKS11		938	997	1041	1101	1158	1388
GKS14		1037	1096	1140	1200	1257	1487

	a	h[1)]	h_1	o	p[1)]	q
GKS04	20	100	71	203	171	107.5
GKS05	23	125	80	232	205	130
GKS06	28	150	100	291	250	160
GKS07	34	190	120	354	310	200
GKS09	41	236	150	429	386	240
GKS11	54	300	185	527	485	305
GKS14	67	375	230	636	605	375

	d	d	d_1	d_2	l	l_1	l_2	u	t	i_1	o_1[1)]	a_1	b_1	e_1	f_1	s_1
	k6	m6											H7			
GKS04	25		45	M10	50	6	40	8	28	52.5	162.5	104	75	90	3	M6x12
GKS05	30		45	M10	60	6	45	8	33	64	196.5	118	80	100	4	M8x15
GKS06	40		65	M16	80	7	63	12	43	85	235.5	140	100	120	4	M10x16
GKS07	50		75	M16	100	8	80	14	53.5	105	295.5	165	115	140	5	M12x18
GKS09		60	95	M20	120	8	100	18	64	125	355.5	205	145	175	6	M16x24
GKS11		80	105	M20	160	15	125	22	85	166	444.5	240	140	205	6	M20x32
GKS14		100	135	M24	200	18	160	28	106	207	543.5	290	170	250	6	M24x35

	a_5	a_6	b_5	b_6	b_7	c_5	e_5	f_5	f_6	m	n	s_5
GKS04	45	45	110	119	85	14	105	132	141	21	22	9
GKS05	47.5	47.5	115	140	105	17	127	144	169	21	29	11
GKS06	60	60	155	170	120	20	145	191	206	23	36	14
GKS07	70	70	190	210	150	25	180	235	255	28	45	18
GKS09	90	90	240	266	185	30	222	300	326	37	60	22
GKS11	105	105	290	325	225	40	270	363	398	43	73	26
GKS14	135	135	360	415	275	50	328	442	497	52	82	33

[1)] k_2 !

GKS□□-3M VAK

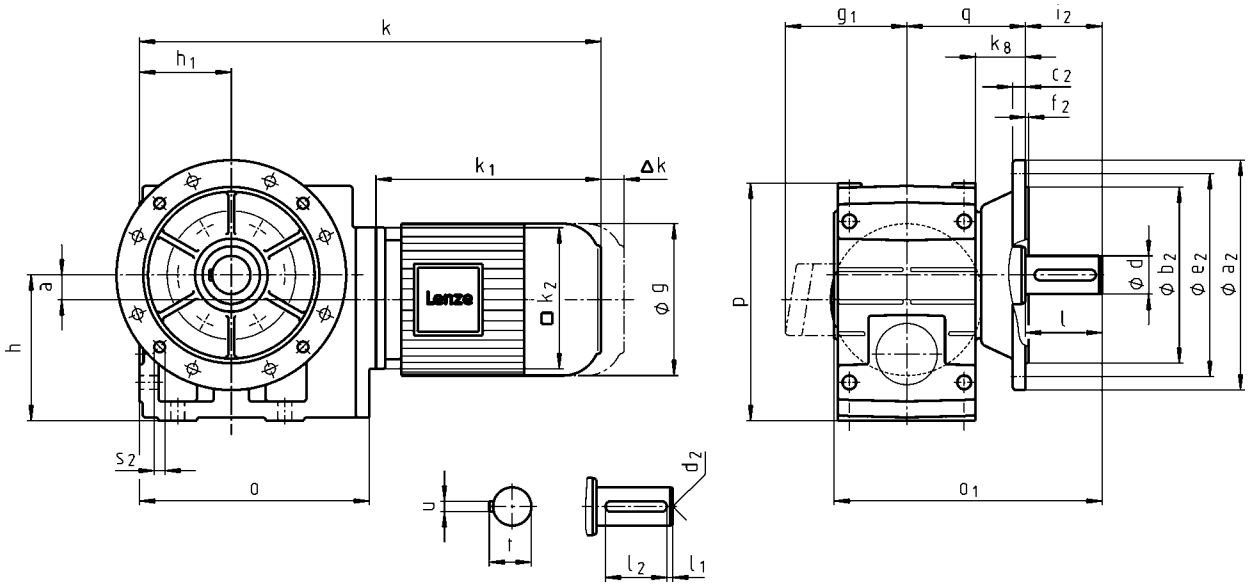

		080C32	090C12 090C32	100C12	100C32	112C22
g		156	176	194		218
g_1	MHEMAXX	141	146	157		167
	MHEMABR	132	137	147		158
k_1	MHEMAXX	224.5	274	309	324	363
k_2		145	180			222
Δ k	MHEMABR	73	68	76		90
	MHFMAXX	128		109		102
	MHFMABR	183	181	170		183
		k				
GKS04		441	501			
GKS05		461	521	556	571	
GKS06		517	577	612	627	672
GKS07		573	633	668	683	728
GKS09			704	739	754	799
GKS11				830	845	890
GKS14						989

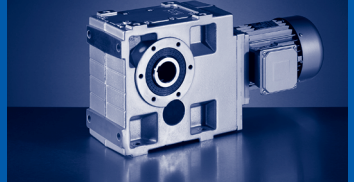

		132C12 132C22	160C22	160C32	180C12 180C32	180C42	225C12 225C22
g		258	310		348		447
g_1	MHEMAXX	195	210		230		346
	MHEMABR	187	210		230		346
k_1	MHEMAXX	403	457.5	501.5	561	618	848
k_2		265	300				
Δ k	MHEMABR	109.5	105		113		
	MHFMAXX	115	149			155	213
	MHFMABR	201.5	179		215		213
		k					
GKS06		720					
GKS07		776	835	879			
GKS09		847	906	950	1010		
GKS11		938	997	1041	1101	1158	1388
GKS14		1037	1096	1140	1200	1257	1487

	a	h[1)]	h_1	k_8	o	p[1)]	q
GKS04	20	100	71	38.5	203	171	91
GKS05	23	125	80	40	232	205	103.5
GKS06	28	150	100	49	291	250	121.5
GKS07	34	190	120	65.5	354	310	155.5
GKS09	41	236	150	69.5	429	386	180.5
GKS11	54	300	185	70.5	527	485	205.5
GKS14	67	375	230	71.5	636	605	235.5

	d	d	d_2	l	l_1	l_2	u	t	i_2	o_1[1)]	a_2	b_2	c_2	e_2	f_2	s_2
	k6	m6										j7				
GKS04	25		M10	50	6	40	8	28	50	195.5	160	110	10	130	3.5	4 x 9
GKS05	30		M10	60	6	45	8	33	60	229.5	200	130	12	165	4	4 x 11
GKS06	40		M16	80	7	63	12	43	80	276.5	250	180	15	215	4	4 x 14
GKS07	50		M16	100	8	80	14	53.5	100	350.5	250 300	180 230	15 17	215 265	4 4	4 x 14 4 x 14
GKS09		60	M20	120	8	100	18	64	120	415.5	350	250	18	300	4	4 x 17.5
GKS11		80	M20	160	15	125	22	85	160	504.5	400 450	300 350	20 22	350 400	5 5	4 x 17.5 8 x 17.5
GKS14		100	M24	200	18	160	28	106	200	603.5	450	350	22	400	5	8 x 18.5

[1)] k_2 !

GKS□□-4M H□R

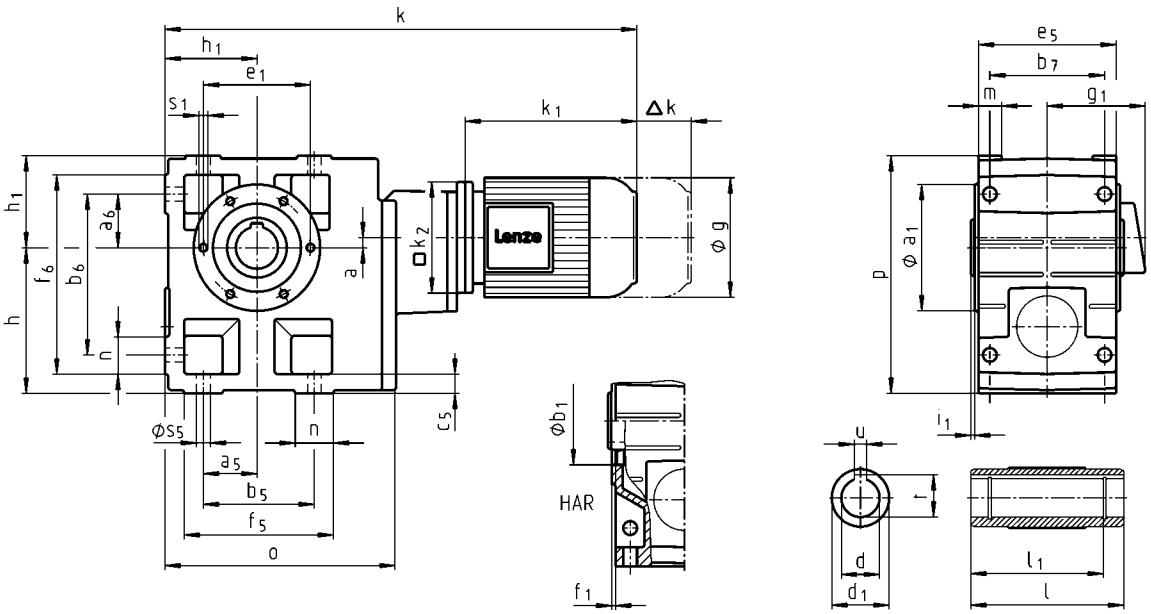

		080C32	090C12	090C32	100C12	100C32
g		156	176		194	
g_1	MHEMAXX	141	146		157	
	MHEMABR	132	137		147	
k_1	MHEMAXX	224.5	274		309	324
k_2		145	180			
Δ k	MHEMABR	73	68		76	
	MHFMAXX	128			109	
	MHFMABR	183	181		170	
		k				
GKS06		611	670			
GKS07		678	737		772	
GKS09		767	826		861	876
GKS11		877	936		971	986
GKS14			1069		1104	1119

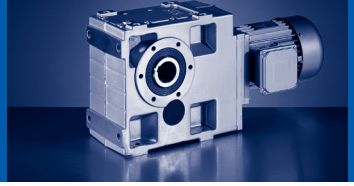

		112C22	132C12 132C22	160C22	160C32	180C12
g		218	258	310		348
g_1	MHEMAXX	167	195	210		230
	MHEMABR	158	187	210		230
k_1	MHEMAXX	363	403	457.5	501.5	561
k_2		222	265	300		
Δ k	MHEMABR	90	109.5	105		113
	MHFMAXX	102	115	149		
	MHFMABR	183	201.5	179		215
		k				
GKS09		921				
GKS11		1031	1079			
GKS14		1164	1212	1272	1316	1375

	a	h	h_1	o	p
GKS06	8	150	100	288	250
GKS07	11	190	120	350.5	310
GKS09	15	236	150	426	386
GKS11	16	300	185	523	485
GKS14	22	375	230	632	605

	d	d_1	l	l_1	u	t	i_1	a_1	b_1	e_1	f_1	s_1
	H7				JS9	+0,2			H7			
GKS06	40 45	65 65	160 160	140 140	12 14	43.3 48.8	5 5	140	100	120	4	M10x16
GKS07	50 55	75 75	200 200	175 175	14 16	53.8 59.3	5 5	165	115	140	5	M12x18
GKS09	60 70	95 95	240 240	210 210	18 20	64.4 74.9	5 5	205	145	175	6	M16x24
GKS11	70 80	105 105	290 290	250 250	20 22	74.9 85.4	6 6	240	140	205	6	M20x32
GKS14	100	135	350	305	28	106.4	7	290	170	250	6	M24x35

	a_5	a_6	b_5	b_6	b_7	c_5	e_5	f_5	f_6	m	n	s_5
GKS06	60	60	155	170	120	20	145	191	206	23	36	14
GKS07	70	70	190	210	150	25	180	235	255	28	45	18
GKS09	90	90	240	266	185	30	222	300	326	37	60	22
GKS11	105	105	290	325	225	40	270	363	398	43	73	26
GKS14	135	135	360	415	275	50	328	442	497	52	82	33

GKS□□-4M HAK

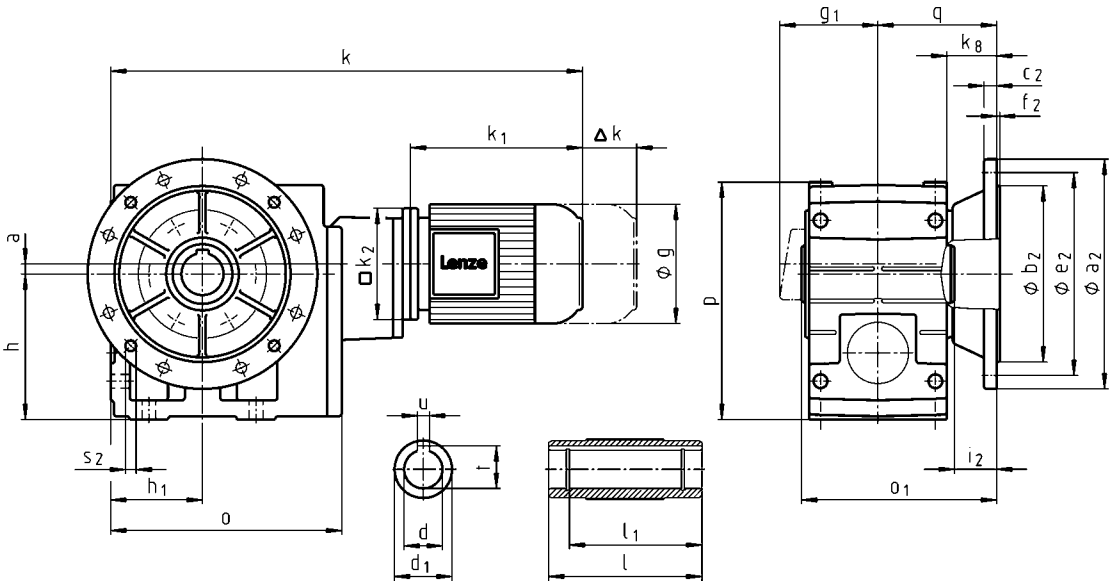

		080C32	090C12	090C32	100C12	100C32
g		156	176		194	
g_1	MHEMAXX	141	146		157	
	MHEMABR	132	137		147	
k_1	MHEMAXX	224.5	274		309	324
k_2		145	180			
Δk	MHEMABR	73	68		76	
	MHFMAXX	128			109	
	MHFMABR	183	181		170	
		k				
GKS06		611	670			
GKS07		678	737		772	
GKS09		767	826		861	876
GKS11		877	936		971	986
GKS14			1069		1104	1119

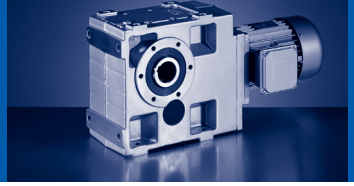

		112C22	132C12 132C22	160C22	160C32	180C12
g		218	258	310		348
g_1	MHEMAXX	167	195	210		230
	MHEMABR	158	187	210		230
k_1	MHEMAXX	363	403	457.5	501.5	561
k_2		222	265	300		
Δ k	MHEMABR	90	109.5	105		113
	MHFMAXX	102	115	149		
	MHFMABR	183	201.5	179		215
		k				
GKS09		921				
GKS11		1031	1079			
GKS14		1164	1212	1272	1316	1375

	a	h	h_1	k_8	o	p	q
GKS06	8	150	100	49	288	250	121.5
GKS07	11	190	120	65.5	350.5	310	155.5
GKS09	15	236	150	69.5	426	386	180.5
GKS11	16	300	185	70.5	523	485	205.5
GKS14	22	375	230	71.5	632	605	235.5

	d	d_1	l	l_1	u	t	i_2	o_1	a_2	b_2	c_2	e_2	f_2	s_2
	H7				JS9	+0,2				j7				
GKS06	40 45	65 65	160 160	140 140	12 14	43.3 48.8	42 41	201.5 201.5	200 250	180 130	12 15	165 215	3.5 4	4 x 11 4 x 14
GKS07	50 55	75 75	200 200	175 175	14 16	53.8 59.3	55 55	255.5 255.5	250 300	180 230	15 17	215 265	4 4	4 x 14 4 x 14
GKS09	60 70	95 95	240 240	210 210	18 20	64.4 74.9	60 60	300.5 300.5	350	250	18	300	4	4 x 17.5
GKS11	70 80	105 105	290 290	250 250	20 22	74.9 85.4	60 60	350.5 350.5	400 450	300 350	20 22	350 400	5 5	4 x 17.5 8 x 17.5
GKS14	100	135	350	305	28	106.4	60	410.5	450	350	22	400	5	8 x 18.5

GKS□□-4M V□R

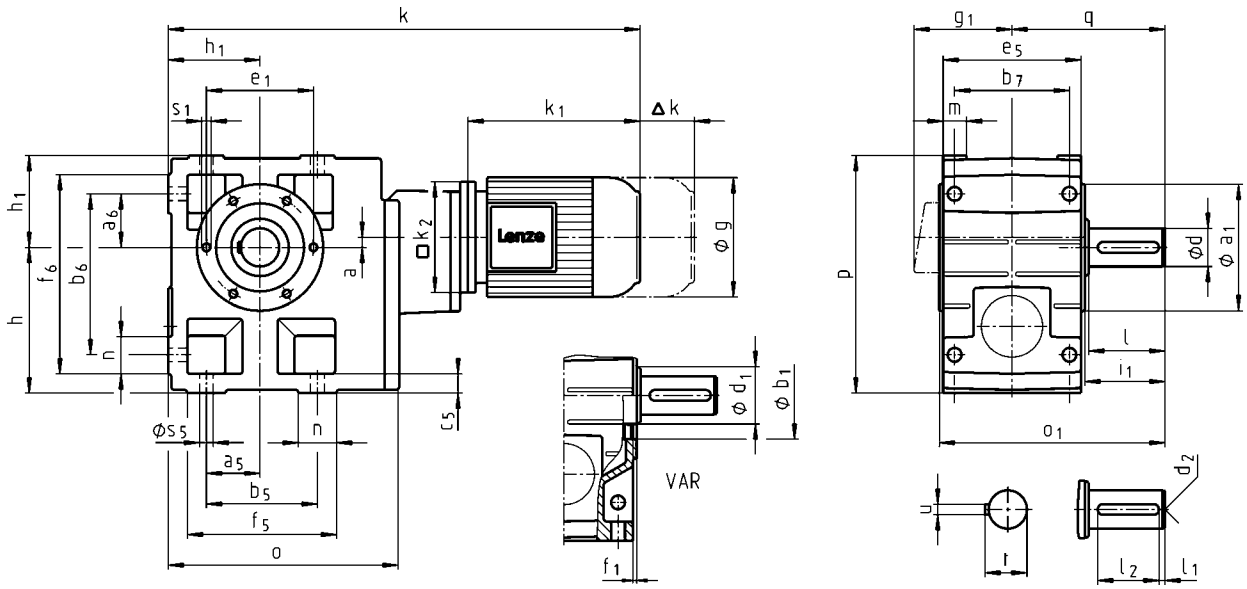

		080C32	090C12	090C32	100C12	100C32
g		156	176		194	
g_1	MHEMAXX	141	146		157	
	MHEMABR	132	137		147	
k_1	MHEMAXX	224.5	274		309	324
k_2		145	180			
Δ k	MHEMABR	73	68		76	
	MHFMAXX	128			109	
	MHFMABR	183	181		170	
		k				
GKS06		611	670			
GKS07		678	737		772	
GKS09		767	826		861	876
GKS11		877	936		971	986
GKS14			1069		1104	1119

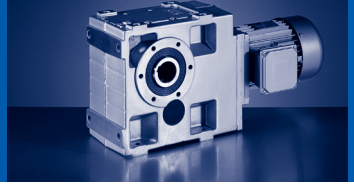

		112C22	132C12 132C22	160C22	160C32	180C12
g		218	258	310		348
g_1	MHEMAXX	167	195	210		230
	MHEMABR	158	187	210		230
k_1	MHEMAXX	363	403	457.5	501.5	561
k_2		222	265	300		
Δ k	MHEMABR	90	109.5	105		113
	MHFMAXX	102	115	149		
	MHFMABR	183	201.5	179		215
		k				
GKS09		921				
GKS11		1031	1079			
GKS14		1164	1212	1272	1316	1375

	a	h	h_1	o	p	q
GKS06	8	150	100	288	250	160
GKS07	11	190	120	350.5	310	200
GKS09	15	236	150	426	386	240
GKS11	16	300	185	523	485	305
GKS14	22	375	230	632	605	375

	d	d	d_1	d_2	l	l_1	l_2	u	t	i_1	o_1	a_1	b_1	e_1	f_1	s_1
	k6	m6											H7			
GKS06	40		65	M16	80	7	63	12	43	85	235.5	140	100	120	4	M10x16
GKS07	50		75	M16	100	8	80	14	53.5	105	295.5	165	115	140	5	M12x18
GKS09		60	95	M20	120	8	100	18	64	125	355.5	205	145	175	6	M16x24
GKS11		80	105	M20	160	15	125	22	85	166	444.5	240	140	205	6	M20x32
GKS14		100	135	M24	200	18	160	28	106	207	543.5	290	170	250	6	M24x35

	a_5	a_6	b_5	b_6	b_7	c_5	e_5	f_5	f_6	m	n	s_5
GKS06	60	60	155	170	120	20	145	191	206	23	36	14
GKS07	70	70	190	210	150	25	180	235	255	28	45	18
GKS09	90	90	240	266	185	30	222	300	326	37	60	22
GKS11	105	105	290	325	225	40	270	363	398	43	73	26
GKS14	135	135	360	415	275	50	328	442	497	52	82	33

GKS□□-4M VAK

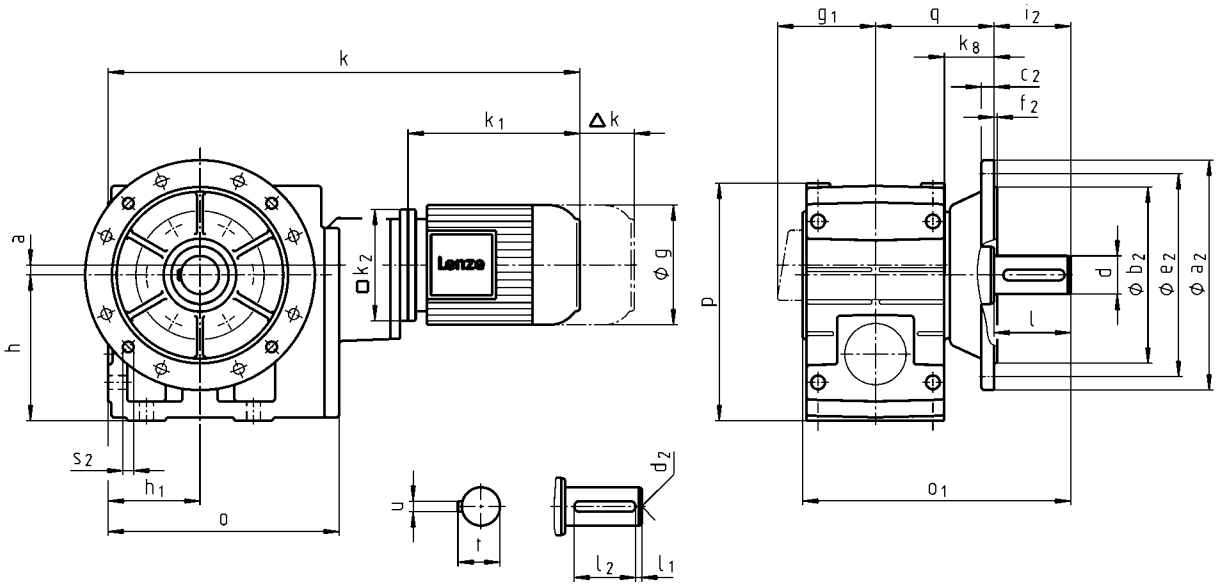

		080C32	090C12	090C32	100C12	100C32
g		156	176		194	
g_1	MHEMAXX	141	146		157	
	MHEMABR	132	137		147	
k_1	MHEMAXX	224.5	274		309	324
k_2		145	180			
Δ k	MHEMABR	73	68		76	
	MHFMAXX	128			109	
	MHFMABR	183	181		170	
		k				
GKS06		611	670			
GKS07		678	737		772	
GKS09		767	826		861	876
GKS11		877	936		971	986
GKS14			1069		1104	1119

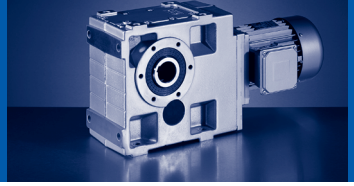

		112C22	132C12 132C22	160C22	160C32	180C12
g		218	258	310		348
g_1	MHEMAXX	167	195	210		230
	MHEMABR	158	187	210		230
k_1	MHEMAXX	363	403	457.5	501.5	561
k_2		222	265	300		
Δ k	MHEMABR	90	109.5	105		113
	MHFMAXX	102	115	149		
	MHFMABR	183	201.5	179		215
		k				
GKS09		921				
GKS11		1031	1079			
GKS14		1164	1212	1272	1316	1375

	a	h	h_1	k_8	o	p	q
GKS06	8	150	100	49	288	250	121.5
GKS07	11	190	120	65.5	350.5	310	155.5
GKS09	15	236	150	69.5	426	386	180.5
GKS11	16	300	185	70.5	523	485	205.5
GKS14	22	375	230	71.5	632	605	235.5

	d	d	d_2	l	l_1	l_2	u	t	i_2	o_1	a_2	b_2	c_2	e_2	f_2	s_2
	k6	m6										j7				
GKS06	40		M16	80	7	63	12	43	80	276.5	250	180	15	215	4	4 x 14
GKS07	50		M16	100	8	80	14	53.5	100	350.5	250 300	180 230	15 17	215 265	4 4	4 x 14 4 x 14
GKS09		60	M20	120	8	100	18	64	120	415.5	350	250	18	300	4	4 x 17.5
GKS11		80	M20	160	15	125	22	85	160	504.5	400 450	300 350	20 22	350 400	5 5	4 x 17.5 8 x 17.5
GKS14		100	M24	200	18	160	28	106	200	603.5	450	350	22	400	5	8 x 18.5

Hollow shaft with shrink disc

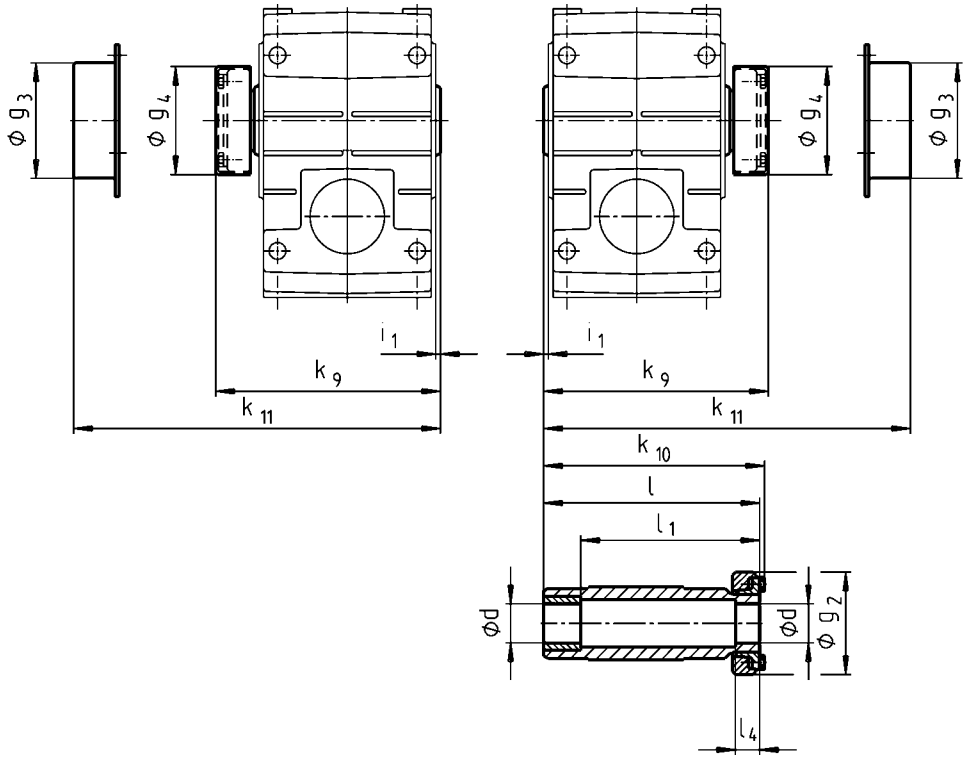

	d	g_2	g_3	g_4	i_1	k_9	k_{10}	k_{11}	l	l_1	l_4
	h6										
GKS04	25 30	72	79	76	2.5	150	148	154	142	122	26
GKS05	35	80	90	84	4.0	176	174	179	168	148	28
GKS06	40	90	100	94		202	200	204	194	164	30
GKS07	50	110	124	116	5.0	241	238	244	232	192	26
GKS09	65	141	159	147		288	285	287	278	228	30
GKS11	80	170	191	176	6.0	347	344	349	338	238	42
GKS14	100	215	253	221	7.0	418	415	421	407	307	55

- Output flange and hollow shaft with shrink disc (output version SAK) are not possible in the same location. For additional dimensions see output version H□□.
- Ensure that the strength of the machine shaft material is adequate in shrink disc designs.
  When using typical steels (e.g. C45, 42CrMo4), the torques listed in the selection tables can be used without restriction. Please consult us if you wish to use material that is considerably weaker. Medium surface roughness Rz must not exceed 15 µm (turning is sufficient).

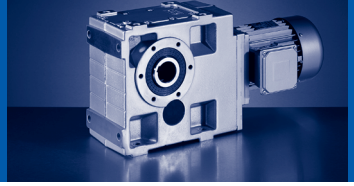

Hoseproof hollow shaft cover

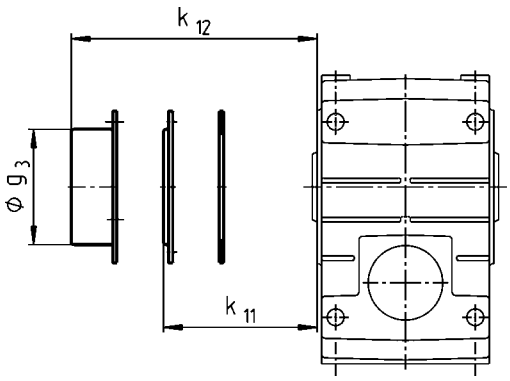

► Cover including gasket

	k_{11}	k_{12}	g_3
GKS04	9		
GKS05	10		
GKS06	11		
GKS07			
GKS09		54	159
GKS11		67	191
GKS14		80	253

Gearbox with 2nd output shaft end

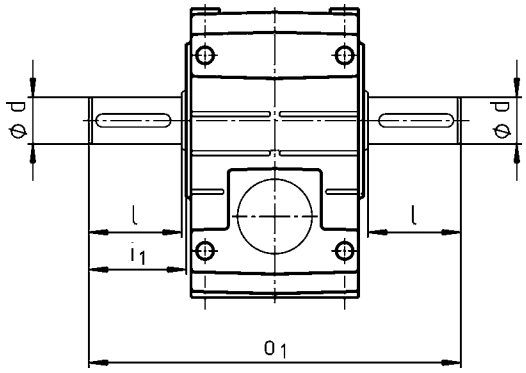

	d	d	l	i_1	o_1
	k6	m6			
GKS04	25		50	52.5	215
GKS05	30		60	64.0	260
GKS06	40		80	85.0	320
GKS07	50		100	105.0	400
GKS09		60	120	125.0	480
GKS11		80	160	166.0	610
GKS14		100	200	207.0	750

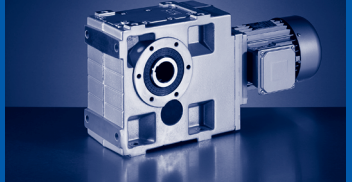

Torque plate on threaded pitch circle

In position 3

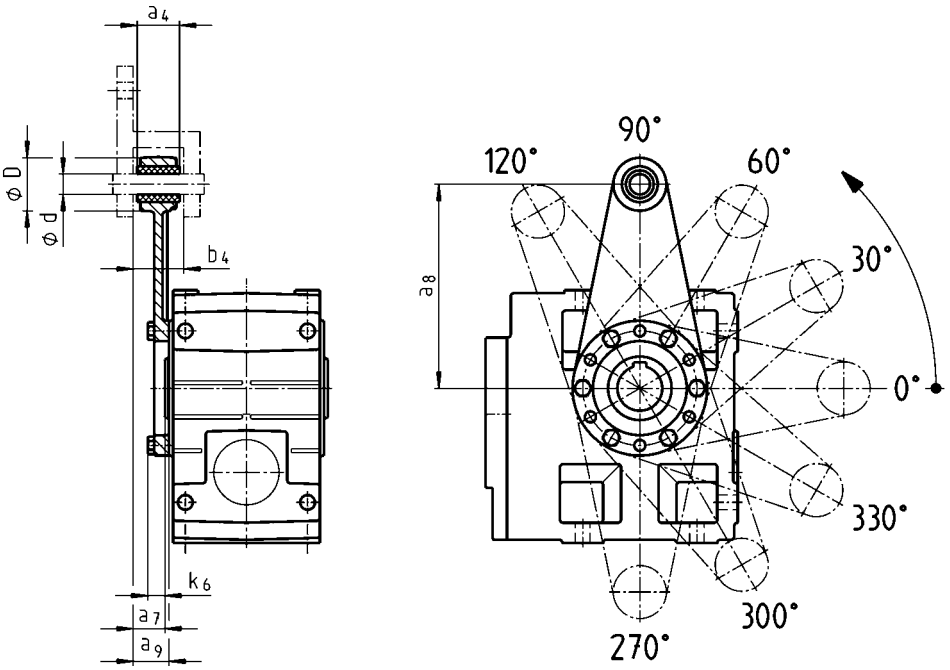

In position 5

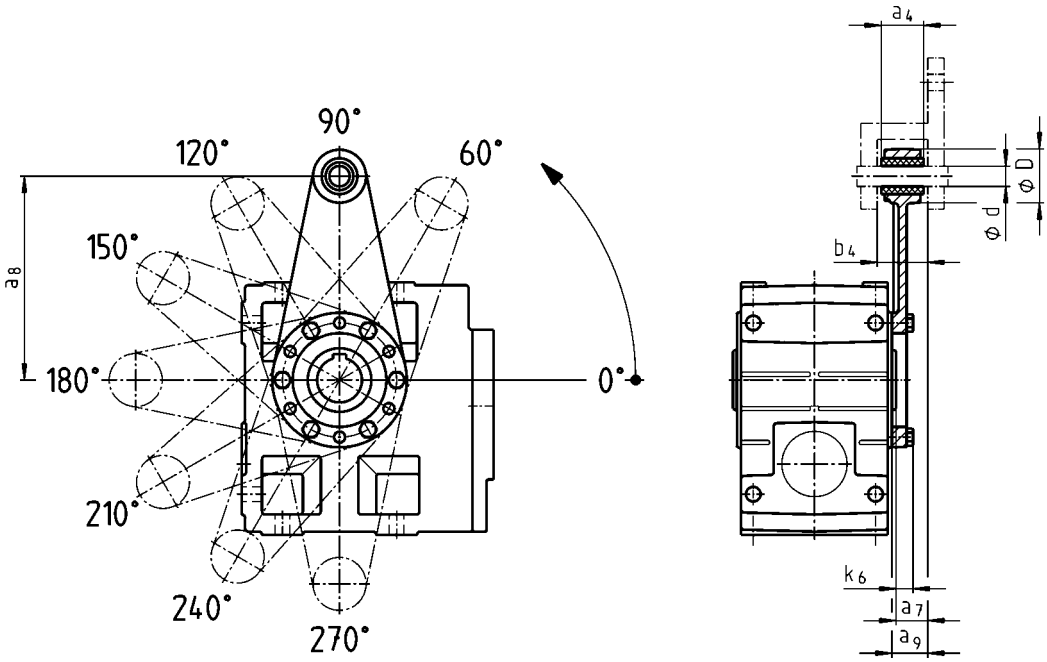

	a_4	a_7	a_8	a_9	b_4	d	D	k_6
GKS04	30	24.0	130	26.5	34.5	12	35	16
GKS05	34	23.5	160	27.5	38.5	16	45	15
GKS06	40	28.0	200	33.0	44.5	20	50	18
GKS07	46	32.5	250	37.5	50.5	25	65	21

Torque plate at housing foot

In position 2, 4 or 6

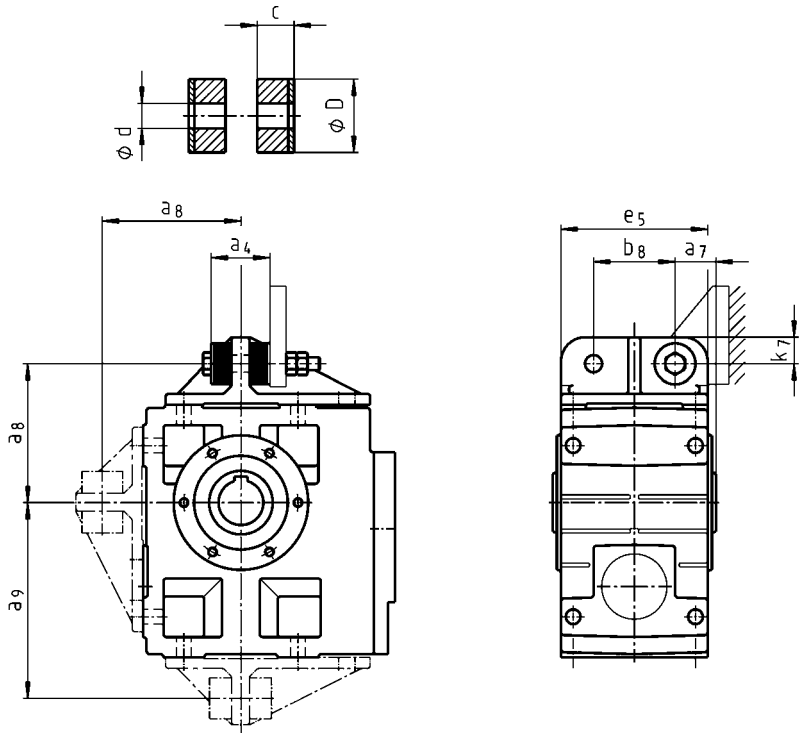

	a_4	a_7	a_8	a_9	b_8	c	d	D	e_5	k_7
GKS04	41	27.5	106	135.0	60	14.5	11	30	100	20
GKS05	45	35.0	115	160.0	70	15.0	13	40	127	25
GKS06	72	40.0	145	195.0	80	27.0	17	50	145	28
GKS07	78	50.0	170	240.0	100	28.0	21	60	180	35
GKS09	86	60.0	214	300.0	120	29.0	26	72	222	46
GKS11	94	72.5	260	375.0	145	30.0	33	92	270	55
GKS14	100	85.0	320	465.0	180		39	110	328	70

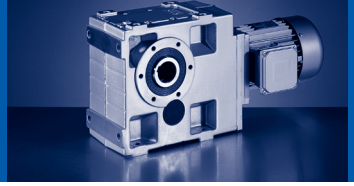

Mounting set for hollow shaft circlip - Proposed design for auxiliary tools

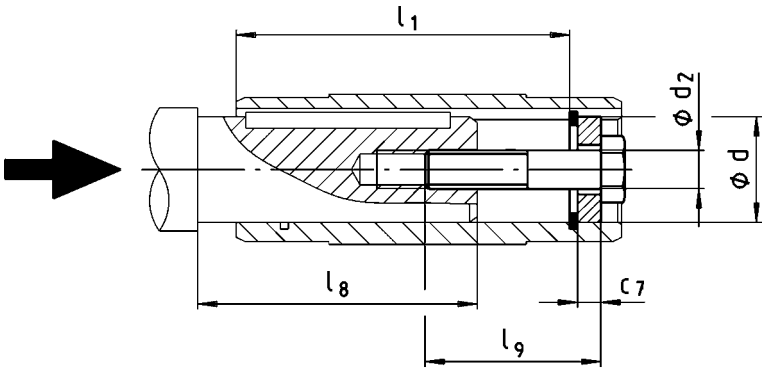

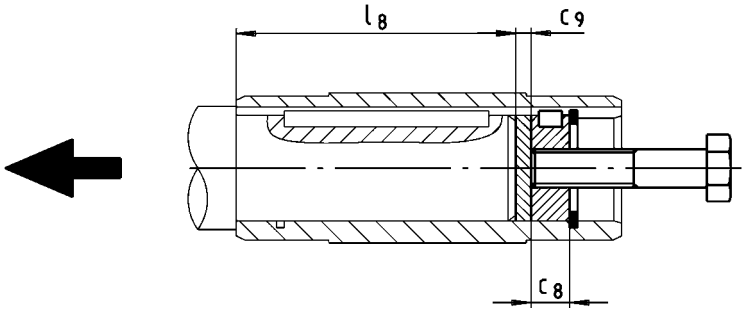

	d	l_1	d_2	l_9	c_7	c_8	c_9	$l_{8, max}$
	H7							
GKS04	25 30	100	M10	40	5	10	3	85
					6			
GKS05	30 35	124						107
			M12	50	7	12		
GKS06	40 45	140	M16	60	8	16	4	118
					9			
GKS07	50 55	175			10		5	148
			M20	80	11	20		
GKS09	60 70	210			13			182
					14			
GKS11	70 80	250					6	221
					16			
GKS14	100	305	M24	100	20	24	8	270

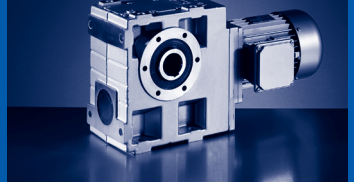

Permissible radial and axial forces at output

Permissible radial force
$F_{rad,per} = \min(f_w \times f_\alpha \times F_{rad,max}\ ;\ f_w \times F_{rad,max}$ at $n_2 \leq 16$ r/min)

Permissible axial force
$F_{ax,per} = F_{ax,max}$ if $F_{rad} = 0$

If F_{rad} **and** $F_{ax} \neq 0$; please contact Lenze.

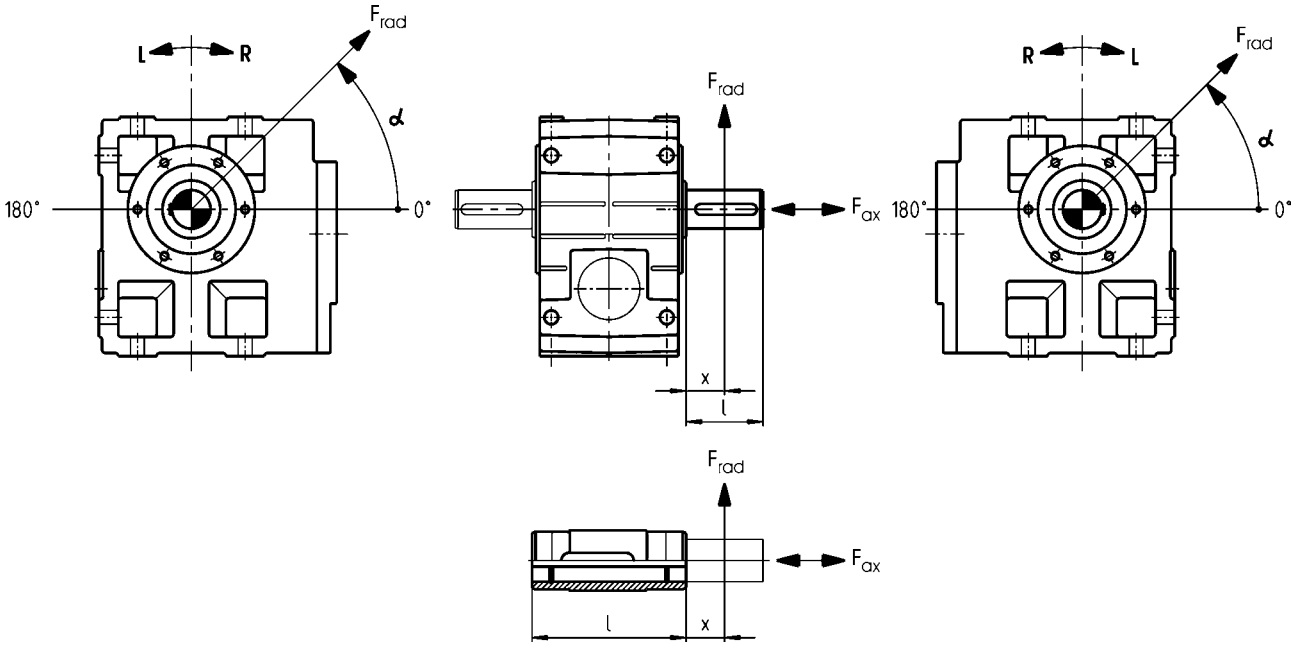

Effective direction factor f_α at output shaft

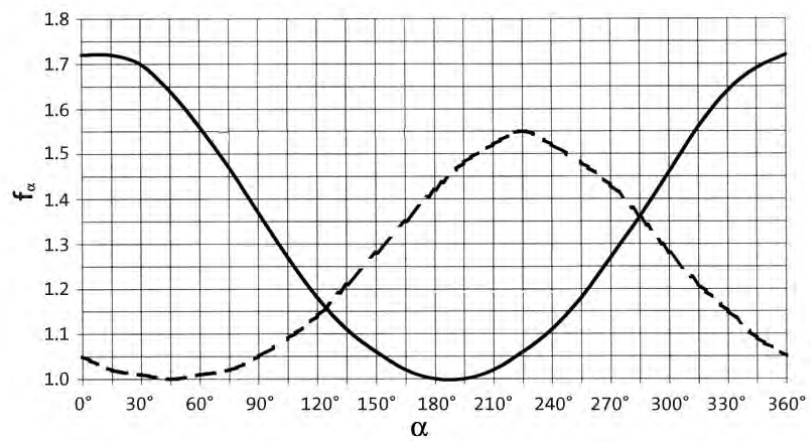

——— Direction of rotation R
— — — Direction of rotation L

Additional load factor f_w at output shaft

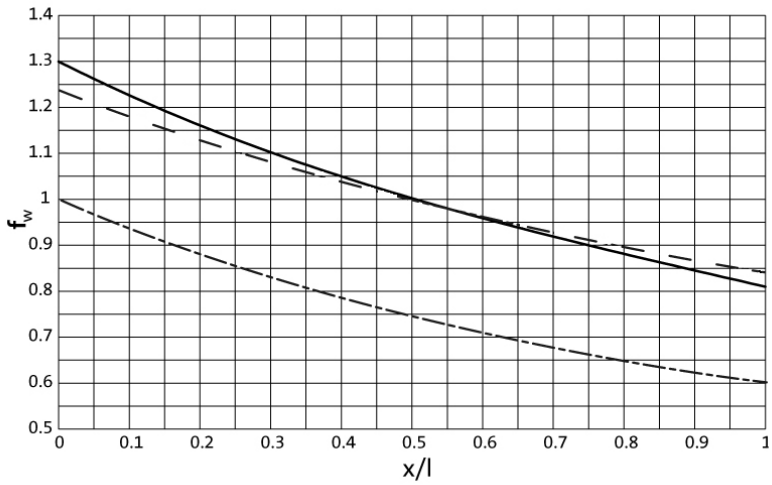

——— Solid shaft (V□□)
— — — Solid shaft with flange (V□K)
— · — Hollow shaft (H□□)

GSS□□-2/3□ H□□

Size	n_2 [r/min]								
Gearbox	630	400	250	160	100	63	40	25	≤16
	Max. radial force, Hollow shaft								
	$F_{rad,max}$ [N]	$F_{rad,max}$ [N]	$F_{rad,max}$ [N]	$F_{rad,max}$ [N]	$F_{rad,max}$ [N]	$F_{rad,max}$ [N]	$F_{rad,max}$ [N]	$F_{rad,max}$ [N]	$F_{rad,max}$ [N]
GSS04	2800	3000	3800	4500	5300	6000	6000	6000	6000
GSS05	3000	3200	3600	4300	5100	6000	7000	7500	7500
GSS06	4400	4600	4800	5600	6600	7700	9100	10700	11500
GSS07	4600	5100	5600	6700	8200	10000	12100	14800	16000
	Max. axial force, Hollow shaft								
	$F_{ax,max}$ [N]	$F_{ax,max}$ [N]	$F_{ax,max}$ [N]	$F_{ax,max}$ [N]	$F_{ax,max}$ [N]	$F_{ax,max}$ [N]	$F_{ax,max}$ [N]	$F_{ax,max}$ [N]	$F_{ax,max}$ [N]
GSS04	2200	2900	3700	4200	4900	5500	5500	5500	5500
GSS05	1600	2200	2800	3500	4400	5500	6000	6000	6000
GSS06	1900	2500	3200	4100	5200	6500	8200	9000	9000
GSS07	1800	2400	3100	4100	5500	7200	9500	12500	12500

- Application of force F_{rad}: at hollow shaft end face (x = 0)
- $F_{ax,max}$ only valid with F_{rad} = 0
- Neither radial nor axial forces are permissible for the hollow shaft with shrink disc (S□□).

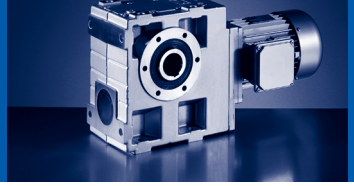

GSS□□-2/3□ V□R

Size	n_2 [r/min]								
Gearbox	630	400	250	160	100	63	40	25	≤16
	Max. radial force, Solid shaft without flange								
	$F_{rad,max}$	$F_{rad,max}$	$F_{rad,max}$	$F_{rad,max}$	$F_{rad,max}$	$F_{rad,max}$	$F_{rad,max}$	$F_{rad,max}$	$F_{rad,max}$
	[N]	[N]	[N]	[N]	[N]	[N]	[N]	[N]	[N]
GSS04	2200	2400	3000	3500	4100	4200	4200	4200	4200
GSS05	2300	2500	2900	3400	4000	4300	4300	4300	4300
GSS06	3400	3500	3600	4200	5000	5900	6900	8200	8500
GSS07	3700	4000	4200	5100	6300	7700	9300	11300	12000
	Max. axial force, Solid shaft without flange								
	$F_{ax,max}$	$F_{ax,max}$	$F_{ax,max}$	$F_{ax,max}$	$F_{ax,max}$	$F_{ax,max}$	$F_{ax,max}$	$F_{ax,max}$	$F_{ax,max}$
	[N]	[N]	[N]	[N]	[N]	[N]	[N]	[N]	[N]
GSS04	2200	2900	3700	4200	4900	5500	5500	5500	5500
GSS05	1600	2200	2800	3500	4400	5500	6000	6000	6000
GSS06	1900	2500	3200	4100	5200	6500	8200	9000	9000
GSS07	1800	2400	3100	4100	5500	7200	9500	12500	12500

GSS□□-2/3□ V□K

Size	n_2 [r/min]								
Gearbox	630	400	250	160	100	63	40	25	≤16
	Max. radial force, Solid shaft with flange								
	$F_{rad,max}$	$F_{rad,max}$	$F_{rad,max}$	$F_{rad,max}$	$F_{rad,max}$	$F_{rad,max}$	$F_{rad,max}$	$F_{rad,max}$	$F_{rad,max}$
	[N]	[N]	[N]	[N]	[N]	[N]	[N]	[N]	[N]
GSS04	2750	3000	4100	4400	4700	4700	4700	4700	4700
GSS05	3450	3750	4900	4900	4900	4900	4900	4900	4900
GSS06	5100	5250	7000	8100	9400	9400	9400	9400	9400
GSS07	5500	6000	7900	9100	10600	12400	14000	14000	14000
	Max. axial force, Solid shaft with flange								
	$F_{ax,max}$	$F_{ax,max}$	$F_{ax,max}$	$F_{ax,max}$	$F_{ax,max}$	$F_{ax,max}$	$F_{ax,max}$	$F_{ax,max}$	$F_{ax,max}$
	[N]	[N]	[N]	[N]	[N]	[N]	[N]	[N]	[N]
GSS04	2100	2800	3500	4000	4200	4200	4200	4200	4200
GSS05	1500	2000	2500	3100	4000	4900	5500	5500	5500
GSS06	1600	2200	2800	3500	4500	5700	7300	8800	8800
GSS07	1400	1900	2400	3200	4300	5900	8000	10000	10000

- Application of force F_{rad}: centre of shaft journal (x = l/2)
- $F_{ax,max}$ only valid with F_{rad} = 0

GSS□□-2

► Moment of inertia (J) depending on ratio i

Gearbox			GSS04
5.639	J	[kgcm²]	1.120
7.733	J	[kgcm²]	0.652
9.042	J	[kgcm²]	0.809
9.897	J	[kgcm²]	0.430
10.827	J	[kgcm²]	0.368
12.400	J	[kgcm²]	0.487
13.810	J	[kgcm²]	0.247
15.869	J	[kgcm²]	0.329
17.360	J	[kgcm²]	0.284
20.417	J	[kgcm²]	0.673
22.143	J	[kgcm²]	0.195
24.800	J	[kgcm²]	0.420
27.125	J	[kgcm²]	0.145
31.738	J	[kgcm²]	0.288
34.100	J	[kgcm²]	0.096
39.200	J	[kgcm²]	0.247
43.917	J	[kgcm²]	0.064
50.000	J	[kgcm²]	0.173
54.250	J	[kgcm²]	0.131
61.250	J	[kgcm²]	0.130
68.200	J	[kgcm²]	0.087
77.000	J	[kgcm²]	0.086
87.833	J	[kgcm²]	0.059
99.167	J	[kgcm²]	0.058
111.318	J	[kgcm²]	0.039
125.682	J	[kgcm²]	0.038
139.500	J	[kgcm²]	0.027
157.500	J	[kgcm²]	0.026
183.786	J	[kgcm²]	0.016
207.500	J	[kgcm²]	0.016

Gearbox			GSS05
5.639	J	[kgcm²]	2.821
7.733	J	[kgcm²]	1.664
9.042	J	[kgcm²]	2.014
9.897	J	[kgcm²]	1.102
10.827	J	[kgcm²]	0.941
12.400	J	[kgcm²]	1.235
13.810	J	[kgcm²]	0.638
15.869	J	[kgcm²]	0.840
17.360	J	[kgcm²]	0.722
20.417	J	[kgcm²]	1.601
22.143	J	[kgcm²]	0.504
24.800	J	[kgcm²]	1.059
27.125	J	[kgcm²]	0.377
31.738	J	[kgcm²]	0.733
35.306	J	[kgcm²]	0.233
39.200	J	[kgcm²]	0.610
43.917	J	[kgcm²]	0.167
50.000	J	[kgcm²]	0.435
54.250	J	[kgcm²]	0.341
61.250	J	[kgcm²]	0.332
70.611	J	[kgcm²]	0.211
79.722	J	[kgcm²]	0.206
87.833	J	[kgcm²]	0.153
99.167	J	[kgcm²]	0.149
113.667	J	[kgcm²]	0.096
128.333	J	[kgcm²]	0.094
137.950	J	[kgcm²]	0.070
155.750	J	[kgcm²]	0.069
176.313	J	[kgcm²]	0.045
199.063	J	[kgcm²]	0.044

► The moments of inertia relate to the drive shaft of the gearbox.
► The total moment of inertia is calculated by adding the values of gearbox, motor and accessories.

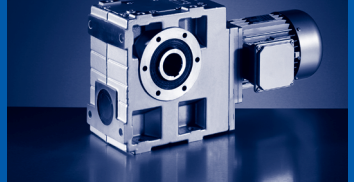

GSS□□-2

► Moment of inertia (J) depending on ratio i

Gearbox			GSS06
5.833	J	[kgcm²]	6.966
8.000	J	[kgcm²]	4.219
9.042	J	[kgcm²]	5.541
10.238	J	[kgcm²]	2.811
11.200	J	[kgcm²]	2.393
12.400	J	[kgcm²]	3.461
14.286	J	[kgcm²]	1.630
15.869	J	[kgcm²]	2.348
17.360	J	[kgcm²]	2.006
20.417	J	[kgcm²]	4.172
22.143	J	[kgcm²]	1.392
24.800	J	[kgcm²]	3.056
27.125	J	[kgcm²]	1.039
31.738	J	[kgcm²]	2.101
35.306	J	[kgcm²]	0.660
39.200	J	[kgcm²]	1.635
43.917	J	[kgcm²]	0.475
50.000	J	[kgcm²]	1.164
54.250	J	[kgcm²]	0.955
61.250	J	[kgcm²]	0.887
70.611	J	[kgcm²]	0.610
79.722	J	[kgcm²]	0.570
87.833	J	[kgcm²]	0.443
99.167	J	[kgcm²]	0.417
113.667	J	[kgcm²]	0.276
128.333	J	[kgcm²]	0.260
137.950	J	[kgcm²]	0.201
155.750	J	[kgcm²]	0.191
174.375	J	[kgcm²]	0.130
196.875	J	[kgcm²]	0.123

Gearbox			GSS07
5.862	J	[kgcm²]	21.357
8.125	J	[kgcm²]	12.754
9.086	J	[kgcm²]	17.436
10.000	J	[kgcm²]	9.140
11.200	J	[kgcm²]	7.498
12.594	J	[kgcm²]	10.713
14.286	J	[kgcm²]	4.837
15.500	J	[kgcm²]	7.792
17.360	J	[kgcm²]	6.424
20.517	J	[kgcm²]	13.579
22.143	J	[kgcm²]	4.177
25.188	J	[kgcm²]	9.590
27.125	J	[kgcm²]	3.130
31.000	J	[kgcm²]	7.051
35.306	J	[kgcm²]	1.955
39.200	J	[kgcm²]	5.368
43.271	J	[kgcm²]	1.433
50.000	J	[kgcm²]	3.527
54.250	J	[kgcm²]	2.888
61.250	J	[kgcm²]	2.698
70.611	J	[kgcm²]	1.812
79.722	J	[kgcm²]	1.700
86.542	J	[kgcm²]	1.338
97.708	J	[kgcm²]	1.263
113.667	J	[kgcm²]	0.833
128.333	J	[kgcm²]	0.789
137.950	J	[kgcm²]	0.609
155.750	J	[kgcm²]	0.579
174.375	J	[kgcm²]	0.391
196.875	J	[kgcm²]	0.373

► The moments of inertia relate to the drive shaft of the gearbox.
► The total moment of inertia is calculated by adding the values of gearbox, motor and accessories.

GSS□□-3

► Moment of inertia (J) depending on ratio i

Gearbox			GSS05
125.476	J	[kgcm²]	0.154
153.708	J	[kgcm²]	0.117
193.233	J	[kgcm²]	0.078
222.133	J	[kgcm²]	0.206
250.952	J	[kgcm²]	0.151
283.333	J	[kgcm²]	0.148
307.417	J	[kgcm²]	0.115
347.083	J	[kgcm²]	0.113
386.467	J	[kgcm²]	0.077
436.333	J	[kgcm²]	0.076
497.722	J	[kgcm²]	0.053
561.944	J	[kgcm²]	0.052
630.803	J	[kgcm²]	0.035
712.197	J	[kgcm²]	0.034
790.500	J	[kgcm²]	0.024
892.500	J	[kgcm²]	0.024
1041.452	J	[kgcm²]	0.015
1175.833	J	[kgcm²]	0.015

Gearbox			GSS06
126.531	J	[kgcm²]	0.310
142.857	J	[kgcm²]	0.298
155.000	J	[kgcm²]	0.271
175.000	J	[kgcm²]	0.263
194.857	J	[kgcm²]	0.144
220.000	J	[kgcm²]	0.139
238.700	J	[kgcm²]	0.128
269.500	J	[kgcm²]	0.124
310.689	J	[kgcm²]	0.112
350.778	J	[kgcm²]	0.110
386.467	J	[kgcm²]	0.103
436.333	J	[kgcm²]	0.102
497.722	J	[kgcm²]	0.069
561.944	J	[kgcm²]	0.068
630.803	J	[kgcm²]	0.045
712.197	J	[kgcm²]	0.044
816.333	J	[kgcm²]	0.042
921.667	J	[kgcm²]	0.042
1023.000	J	[kgcm²]	0.029
1155.000	J	[kgcm²]	0.029
1241.550	J	[kgcm²]	0.028
1401.750	J	[kgcm²]	0.028
1635.693	J	[kgcm²]	0.017
1846.750	J	[kgcm²]	0.017

► The moments of inertia relate to the drive shaft of the gearbox.
► The total moment of inertia is calculated by adding the values of gearbox, motor and accessories.

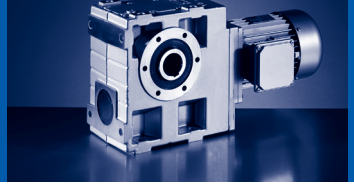

GSS□□-3

► Moment of inertia (J) depending on ratio i

Gearbox			GSS07
126.531	J	[kgcm²]	0.857
142.857	J	[kgcm²]	0.822
155.000	J	[kgcm²]	0.742
175.000	J	[kgcm²]	0.719
201.746	J	[kgcm²]	0.372
227.778	J	[kgcm²]	0.358
247.139	J	[kgcm²]	0.327
279.028	J	[kgcm²]	0.317
321.673	J	[kgcm²]	0.281
363.179	J	[kgcm²]	0.276
394.245	J	[kgcm²]	0.258
445.116	J	[kgcm²]	0.255
490.403	J	[kgcm²]	0.183
553.681	J	[kgcm²]	0.181
634.639	J	[kgcm²]	0.114
716.528	J	[kgcm²]	0.113
833.556	J	[kgcm²]	0.105
941.111	J	[kgcm²]	0.105
1011.633	J	[kgcm²]	0.076
1142.167	J	[kgcm²]	0.076
1227.755	J	[kgcm²]	0.074
1386.175	J	[kgcm²]	0.073
1569.181	J	[kgcm²]	0.047
1771.656	J	[kgcm²]	0.047

► The moments of inertia relate to the drive shaft of the gearbox.
► The total moment of inertia is calculated by adding the values of gearbox, motor and accessories.

► During start-up, the start-up efficiency η_a of a helical-worm gearbox is lower than its operative efficiency at rated speed. **The start-up efficiency η_a must therefore always be considered when starting under load.**

GSS□□-2

GSS04-2

				n_2 [r/min]											
				10	16	25	32	40	63	100	160	250	400	630	800
5.639	η_a	0.71	$\eta_{c=1}$	0.83	0.86	0.88	0.89	0.89	0.90	0.90	0.90	0.90	0.90	0.89	0.89
7.733	η_a	0.71	$\eta_{c=1}$	0.83	0.86	0.88	0.89	0.89	0.90	0.90	0.90	0.90	0.90	0.89	0.89
9.042	η_a	0.67	$\eta_{c=1}$	0.81	0.84	0.86	0.87	0.87	0.88	0.88	0.87	0.87	0.87	0.87	
9.897	η_a	0.71	$\eta_{c=1}$	0.83	0.86	0.88	0.89	0.89	0.90	0.90	0.90	0.90	0.90	0.89	0.89
10.827	η_a	0.71	$\eta_{c=1}$	0.83	0.86	0.88	0.89	0.89	0.90	0.90	0.90	0.90	0.90	0.89	0.89
12.400	η_a	0.67	$\eta_{c=1}$	0.81	0.84	0.86	0.87	0.87	0.88	0.88	0.87	0.87	0.87	0.87	
13.810	η_a	0.71	$\eta_{c=1}$	0.83	0.86	0.88	0.89	0.89	0.90	0.90	0.90	0.90	0.90	0.89	0.89
15.869	η_a	0.67	$\eta_{c=1}$	0.81	0.84	0.86	0.87	0.87	0.88	0.88	0.87	0.87	0.87	0.87	
17.360	η_a	0.67	$\eta_{c=1}$	0.81	0.84	0.86	0.87	0.87	0.88	0.88	0.87	0.87	0.87	0.87	
20.417	η_a	0.55	$\eta_{c=1}$	0.76	0.78	0.79	0.79	0.79	0.79	0.79	0.78	0.78			
22.143	η_a	0.67	$\eta_{c=1}$	0.81	0.84	0.86	0.87	0.87	0.88	0.88	0.87	0.87	0.87	0.87	
24.800	η_a	0.56	$\eta_{c=1}$	0.77	0.79	0.80	0.81	0.81	0.81	0.80	0.80	0.79			
27.125	η_a	0.67	$\eta_{c=1}$	0.81	0.84	0.86	0.87	0.87	0.88	0.88	0.87	0.87	0.87	0.87	
31.738	η_a	0.56	$\eta_{c=1}$	0.77	0.79	0.80	0.81	0.81	0.81	0.80	0.80	0.79			
34.100	η_a	0.67	$\eta_{c=1}$	0.81	0.84	0.86	0.87	0.87	0.88	0.88	0.87	0.87	0.87	0.87	
39.200	η_a	0.55	$\eta_{c=1}$	0.76	0.78	0.79	0.79	0.79	0.79	0.79	0.78	0.78			
43.917	η_a	0.67	$\eta_{c=1}$	0.81	0.84	0.86	0.87	0.87	0.88	0.88	0.87	0.87	0.87	0.87	
50.000	η_a	0.55	$\eta_{c=1}$	0.76	0.78	0.79	0.79	0.79	0.79	0.79	0.78	0.78			
54.250	η_a	0.56	$\eta_{c=1}$	0.77	0.79	0.80	0.81	0.81	0.81	0.80	0.80	0.79			
61.250	η_a	0.55	$\eta_{c=1}$	0.76	0.78	0.79	0.79	0.79	0.79	0.79	0.78	0.78			
68.200	η_a	0.56	$\eta_{c=1}$	0.77	0.79	0.80	0.81	0.81	0.81	0.80	0.80	0.79			
77.000	η_a	0.55	$\eta_{c=1}$	0.76	0.78	0.79	0.79	0.79	0.79	0.79	0.78	0.78			
87.833	η_a	0.56	$\eta_{c=1}$	0.77	0.79	0.80	0.81	0.81	0.81	0.80	0.80	0.79			
99.167	η_a	0.55	$\eta_{c=1}$	0.76	0.78	0.79	0.79	0.79	0.79	0.79	0.78	0.78			
111.318	η_a	0.56	$\eta_{c=1}$	0.77	0.79	0.80	0.81	0.81	0.81	0.80	0.80	0.79			
125.682	η_a	0.55	$\eta_{c=1}$	0.76	0.78	0.79	0.79	0.79	0.79	0.79	0.78	0.78			
139.500	η_a	0.56	$\eta_{c=1}$	0.77	0.79	0.80	0.81	0.81	0.81	0.80	0.80	0.79			
157.500	η_a	0.55	$\eta_{c=1}$	0.76	0.78	0.79	0.79	0.79	0.79	0.79	0.78	0.78			
183.786	η_a	0.56	$\eta_{c=1}$	0.77	0.79	0.80	0.81	0.81	0.81	0.80	0.80	0.79			
207.500	η_a	0.55	$\eta_{c=1}$	0.76	0.78	0.79	0.79	0.79	0.79	0.79	0.78	0.78			

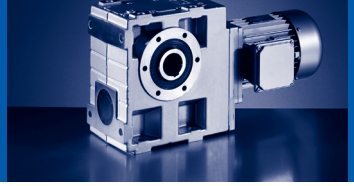

GSS05-2

				n_2 [r/min]											
				10	16	25	32	40	63	100	160	250	400	630	800
5.639	η_a	0.71	$\eta_{c=1}$	0.85	0.87	0.89	0.90	0.90	0.91	0.91	0.91	0.91	0.90	0.90	0.90
7.733	η_a	0.71	$\eta_{c=1}$	0.85	0.87	0.89	0.90	0.90	0.91	0.91	0.91	0.91	0.90	0.90	0.90
9.042	η_a	0.67	$\eta_{c=1}$	0.83	0.86	0.87	0.88	0.88	0.89	0.89	0.88	0.88	0.88	0.88	
9.897	η_a	0.71	$\eta_{c=1}$	0.85	0.87	0.89	0.90	0.90	0.91	0.91	0.91	0.91	0.90	0.90	0.90
10.827	η_a	0.71	$\eta_{c=1}$	0.85	0.87	0.89	0.90	0.90	0.91	0.91	0.91	0.91	0.90	0.90	0.90
12.400	η_a	0.67	$\eta_{c=1}$	0.83	0.86	0.87	0.88	0.88	0.89	0.89	0.88	0.88	0.88	0.88	
13.810	η_a	0.71	$\eta_{c=1}$	0.85	0.87	0.89	0.90	0.90	0.91	0.91	0.91	0.91	0.90	0.90	0.90
15.869	η_a	0.67	$\eta_{c=1}$	0.83	0.86	0.87	0.88	0.88	0.89	0.89	0.88	0.88	0.88	0.88	
17.360	η_a	0.67	$\eta_{c=1}$	0.83	0.86	0.87	0.88	0.88	0.89	0.89	0.88	0.88	0.88	0.88	
20.417	η_a	0.55	$\eta_{c=1}$	0.79	0.80	0.81	0.81	0.81	0.81	0.81	0.81	0.81			
22.143	η_a	0.67	$\eta_{c=1}$	0.83	0.86	0.87	0.88	0.88	0.89	0.89	0.88	0.88	0.88	0.88	
24.800	η_a	0.57	$\eta_{c=1}$	0.79	0.81	0.82	0.82	0.83	0.83	0.82	0.82	0.82			
27.125	η_a	0.67	$\eta_{c=1}$	0.83	0.86	0.87	0.88	0.88	0.89	0.89	0.88	0.88	0.88	0.88	
31.738	η_a	0.57	$\eta_{c=1}$	0.79	0.81	0.82	0.82	0.83	0.83	0.82	0.82	0.82			
35.306	η_a	0.67	$\eta_{c=1}$	0.83	0.86	0.87	0.88	0.88	0.89	0.89	0.88	0.88	0.88	0.88	
39.200	η_a	0.55	$\eta_{c=1}$	0.79	0.80	0.81	0.81	0.81	0.81	0.81	0.81	0.81			
43.917	η_a	0.67	$\eta_{c=1}$	0.83	0.86	0.87	0.88	0.88	0.89	0.89	0.88	0.88	0.88	0.88	
50.000	η_a	0.55	$\eta_{c=1}$	0.79	0.80	0.81	0.81	0.81	0.81	0.81	0.81	0.81			
54.250	η_a	0.57	$\eta_{c=1}$	0.79	0.81	0.82	0.82	0.83	0.83	0.82	0.82	0.82			
61.250	η_a	0.55	$\eta_{c=1}$	0.79	0.80	0.81	0.81	0.81	0.81	0.81	0.81	0.81			
70.611	η_a	0.57	$\eta_{c=1}$	0.79	0.81	0.82	0.82	0.83	0.83	0.82	0.82	0.82			
79.722	η_a	0.55	$\eta_{c=1}$	0.79	0.80	0.81	0.81	0.81	0.81	0.81	0.81	0.81			
87.833	η_a	0.57	$\eta_{c=1}$	0.79	0.81	0.82	0.82	0.83	0.83	0.82	0.82	0.82			
99.167	η_a	0.55	$\eta_{c=1}$	0.79	0.80	0.81	0.81	0.81	0.81	0.81	0.81	0.81			
113.667	η_a	0.57	$\eta_{c=1}$	0.79	0.81	0.82	0.82	0.83	0.83	0.82	0.82	0.82			
128.333	η_a	0.55	$\eta_{c=1}$	0.79	0.80	0.81	0.81	0.81	0.81	0.81	0.81	0.81			
137.950	η_a	0.57	$\eta_{c=1}$	0.79	0.81	0.82	0.82	0.83	0.83	0.82	0.82	0.82			
155.750	η_a	0.55	$\eta_{c=1}$	0.79	0.80	0.81	0.81	0.81	0.81	0.81	0.81	0.81			
176.313	η_a	0.57	$\eta_{c=1}$	0.79	0.81	0.82	0.82	0.83	0.83	0.82	0.82	0.82			
199.063	η_a	0.55	$\eta_{c=1}$	0.79	0.80	0.81	0.81	0.81	0.81	0.81	0.81	0.81			

GSS06-2

				n_2 [r/min]											
				10	16	25	32	40	63	100	160	250	400	630	800
5.833	η_a	0.72	$\eta_{c=1}$	0.87	0.89	0.90	0.91	0.91	0.91	0.92	0.92	0.92	0.91	0.91	0.91
8.000	η_a	0.72	$\eta_{c=1}$	0.87	0.89	0.90	0.91	0.91	0.91	0.92	0.92	0.92	0.91	0.91	0.91
9.042	η_a	0.67	$\eta_{c=1}$	0.85	0.87	0.88	0.89	0.89	0.89	0.89	0.89	0.89	0.89	0.89	
10.238	η_a	0.72	$\eta_{c=1}$	0.87	0.89	0.90	0.91	0.91	0.91	0.92	0.92	0.92	0.91	0.91	0.91
11.200	η_a	0.72	$\eta_{c=1}$	0.87	0.89	0.90	0.91	0.91	0.91	0.92	0.92	0.92	0.91	0.91	0.91
12.400	η_a	0.67	$\eta_{c=1}$	0.85	0.87	0.88	0.89	0.89	0.89	0.89	0.89	0.89	0.89	0.89	0.80
14.286	η_a	0.72	$\eta_{c=1}$	0.89	0.90	0.91	0.91	0.91	0.92	0.92	0.92	0.91	0.91	0.91	
15.869	η_a	0.67	$\eta_{c=1}$	0.85	0.87	0.88	0.89	0.89	0.89	0.89	0.89	0.89	0.89	0.89	
17.360	η_a	0.67	$\eta_{c=1}$	0.85	0.87	0.88	0.89	0.89	0.89	0.89	0.89	0.89	0.89	0.89	
20.417	η_a	0.57	$\eta_{c=1}$	0.81	0.82	0.83	0.83	0.83	0.83	0.83	0.83	0.83			
22.143	η_a	0.67	$\eta_{c=1}$	0.85	0.87	0.88	0.89	0.89	0.89	0.89	0.89	0.89	0.89	0.89	
24.800	η_a	0.57	$\eta_{c=1}$	0.81	0.83	0.83	0.83	0.83	0.83	0.83	0.83	0.83			
27.125	η_a	0.67	$\eta_{c=1}$	0.85	0.87	0.88	0.89	0.89	0.89	0.89	0.89	0.89	0.89	0.89	
31.738	η_a	0.57	$\eta_{c=1}$	0.81	0.83	0.83	0.83	0.83	0.83	0.83	0.83	0.83			
35.306	η_a	0.67	$\eta_{c=1}$	0.85	0.87	0.88	0.89	0.89	0.89	0.89	0.89	0.89	0.89	0.89	
39.200	η_a	0.57	$\eta_{c=1}$	0.81	0.82	0.83	0.83	0.83	0.83	0.83	0.83	0.83			
43.917	η_a	0.67	$\eta_{c=1}$	0.85	0.87	0.88	0.89	0.89	0.89	0.89	0.89	0.89	0.89	0.89	
50.000	η_a	0.57	$\eta_{c=1}$	0.81	0.82	0.83	0.83	0.83	0.83	0.83	0.83	0.83			
54.250	η_a	0.57	$\eta_{c=1}$	0.81	0.83	0.83	0.83	0.83	0.83	0.83	0.83	0.83			
61.250	η_a	0.57	$\eta_{c=1}$	0.81	0.82	0.83	0.83	0.83	0.83	0.83	0.83	0.83			
70.611	η_a	0.57	$\eta_{c=1}$	0.81	0.83	0.83	0.83	0.83	0.83	0.83	0.83	0.83			
79.722	η_a	0.57	$\eta_{c=1}$	0.81	0.82	0.83	0.83	0.83	0.83	0.83	0.83	0.83			
87.833	η_a	0.57	$\eta_{c=1}$	0.81	0.83	0.83	0.83	0.83	0.83	0.83	0.83	0.83			
99.167	η_a	0.57	$\eta_{c=1}$	0.81	0.82	0.83	0.83	0.83	0.83	0.83	0.83	0.83			
113.667	η_a	0.57	$\eta_{c=1}$	0.81	0.83	0.83	0.83	0.83	0.83	0.83	0.83	0.83			
128.333	η_a	0.57	$\eta_{c=1}$	0.81	0.82	0.83	0.83	0.83	0.83	0.83	0.83	0.83			
137.950	η_a	0.57	$\eta_{c=1}$	0.81	0.83	0.83	0.83	0.83	0.83	0.83	0.83	0.83			
155.750	η_a	0.57	$\eta_{c=1}$	0.81	0.82	0.83	0.83	0.83	0.83	0.83	0.83	0.83			
174.375	η_a	0.57	$\eta_{c=1}$	0.81	0.83	0.83	0.83	0.83	0.83	0.83	0.83	0.83			
196.875	η_a	0.57	$\eta_{c=1}$	0.81	0.82	0.83	0.83	0.83	0.83	0.83	0.83	0.83			

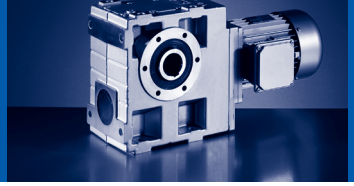

GSS07-2

				n_2 [r/min]											
				10	16	25	32	40	63	100	160	250	400	630	800
5.862	η_a	0.74	$\eta_{c=1}$	0.89	0.91	0.92	0.92	0.92	0.92	0.92	0.92	0.92	0.92	0.92	0.92
8.125	η_a	0.74	$\eta_{c=1}$	0.89	0.91	0.92	0.92	0.92	0.92	0.92	0.92	0.92	0.92	0.92	0.92
9.086	η_a	0.69	$\eta_{c=1}$	0.88	0.89	0.90	0.90	0.90	0.90	0.90	0.90	0.90	0.90	0.90	
10.000	η_a	0.74	$\eta_{c=1}$	0.89	0.91	0.92	0.92	0.92	0.92	0.92	0.92	0.92	0.92	0.92	0.92
11.200	η_a	0.74	$\eta_{c=1}$	0.89	0.91	0.92	0.92	0.92	0.92	0.92	0.92	0.92	0.92	0.92	0.92
12.594	η_a	0.69	$\eta_{c=1}$	0.88	0.89	0.90	0.90	0.90	0.90	0.90	0.90	0.90	0.90	0.90	
14.286	η_a	0.74	$\eta_{c=1}$	0.89	0.91	0.92	0.92	0.92	0.92	0.92	0.92	0.92	0.92	0.92	0.92
15.500	η_a	0.69	$\eta_{c=1}$	0.88	0.89	0.90	0.90	0.90	0.90	0.90	0.90	0.90	0.90	0.90	
17.360	η_a	0.69	$\eta_{c=1}$	0.88	0.89	0.90	0.90	0.90	0.90	0.90	0.90	0.90	0.90	0.90	
20.517	η_a	0.60	$\eta_{c=1}$	0.84	0.84	0.85	0.85	0.85	0.85	0.85	0.85	0.85			
22.143	η_a	0.69	$\eta_{c=1}$	0.88	0.89	0.90	0.90	0.90	0.90	0.90	0.90	0.90	0.90	0.90	
25.188	η_a	0.60	$\eta_{c=1}$	0.84	0.85	0.85	0.85	0.85	0.85	0.85	0.85	0.85			
27.125	η_a	0.69	$\eta_{c=1}$	0.88	0.89	0.90	0.90	0.90	0.90	0.90	0.90	0.90	0.90	0.90	
31.000	η_a	0.60	$\eta_{c=1}$	0.84	0.85	0.85	0.85	0.85	0.85	0.85	0.85	0.85			
35.306	η_a	0.69	$\eta_{c=1}$	0.88	0.89	0.90	0.90	0.90	0.90	0.90	0.90	0.90	0.90	0.90	
39.200	η_a	0.60	$\eta_{c=1}$	0.84	0.84	0.85	0.85	0.85	0.85	0.85	0.85	0.85			
43.271	η_a	0.69	$\eta_{c=1}$	0.88	0.89	0.90	0.90	0.90	0.90	0.90	0.90	0.90	0.90	0.90	
50.000	η_a	0.60	$\eta_{c=1}$	0.84	0.84	0.85	0.85	0.85	0.85	0.85	0.85	0.85			
54.250	η_a	0.60	$\eta_{c=1}$	0.84	0.85	0.85	0.85	0.85	0.85	0.85	0.85	0.85			
61.250	η_a	0.60	$\eta_{c=1}$	0.84	0.84	0.85	0.85	0.85	0.85	0.85	0.85	0.85			
70.611	η_a	0.60	$\eta_{c=1}$	0.84	0.85	0.85	0.85	0.85	0.85	0.85	0.85	0.85			
79.722	η_a	0.60	$\eta_{c=1}$	0.84	0.84	0.85	0.85	0.85	0.85	0.85	0.85	0.85			
86.542	η_a	0.60	$\eta_{c=1}$	0.84	0.85	0.85	0.85	0.85	0.85	0.85	0.85	0.85			
97.708	η_a	0.60	$\eta_{c=1}$	0.84	0.84	0.85	0.85	0.85	0.85	0.85	0.85	0.85			
113.667	η_a	0.60	$\eta_{c=1}$	0.84	0.85	0.85	0.85	0.85	0.85	0.85	0.85	0.85			
128.333	η_a	0.60	$\eta_{c=1}$	0.84	0.84	0.85	0.85	0.85	0.85	0.85	0.85	0.85			
137.950	η_a	0.60	$\eta_{c=1}$	0.84	0.85	0.85	0.85	0.85	0.85	0.85	0.85	0.85			
155.750	η_a	0.60	$\eta_{c=1}$	0.84	0.84	0.85	0.85	0.85	0.85	0.85	0.85	0.85			
174.375	η_a	0.60	$\eta_{c=1}$	0.84	0.85	0.85	0.85	0.85	0.85	0.85	0.85	0.85			
196.875	η_a	0.60	$\eta_{c=1}$	0.84	0.84	0.85	0.85	0.85	0.85	0.85	0.85	0.85			

GSS□□-3

GSS05-3

				n_2 [r/min]										
				10	16	25	32	40	63	100	160	250	400	630
125.476	η_a	0.67	$\eta_{c=1}$	0.83	0.86	0.87	0.88	0.88	0.89	0.89	0.88	0.88	0.88	0.88
153.708	η_a	0.67	$\eta_{c=1}$	0.83	0.86	0.87	0.88	0.88	0.89	0.89	0.88	0.88	0.88	0.88
193.233	η_a	0.67	$\eta_{c=1}$	0.83	0.86	0.87	0.88	0.88	0.89	0.89	0.88	0.88	0.88	0.88
222.133	η_a	0.55	$\eta_{c=1}$	0.79	0.80	0.81	0.81	0.81	0.81	0.81	0.81	0.81		
250.952	η_a	0.57	$\eta_{c=1}$	0.79	0.81	0.82	0.82	0.83	0.83	0.82	0.82	0.82		
283.333	η_a	0.55	$\eta_{c=1}$	0.79	0.80	0.81	0.81	0.81	0.81	0.81	0.81	0.81		
307.417	η_a	0.57	$\eta_{c=1}$	0.79	0.81	0.82	0.82	0.83	0.83	0.82	0.82	0.82		
347.083	η_a	0.55	$\eta_{c=1}$	0.79	0.80	0.81	0.81	0.81	0.81	0.81	0.81	0.81		
386.467	η_a	0.57	$\eta_{c=1}$	0.79	0.81	0.82	0.82	0.83	0.83	0.82	0.82	0.82		
436.333	η_a	0.55	$\eta_{c=1}$	0.79	0.80	0.81	0.81	0.81	0.81	0.81	0.81	0.81		
497.722	η_a	0.57	$\eta_{c=1}$	0.79	0.81	0.82	0.82	0.83	0.83	0.82	0.82	0.82		
561.945	η_a	0.55	$\eta_{c=1}$	0.79	0.80	0.81	0.81	0.81	0.81	0.81	0.81	0.81		
630.803	η_a	0.57	$\eta_{c=1}$	0.79	0.81	0.82	0.82	0.83	0.83	0.82	0.82	0.82		
712.197	η_a	0.55	$\eta_{c=1}$	0.79	0.80	0.81	0.81	0.81	0.81	0.81	0.81	0.81		

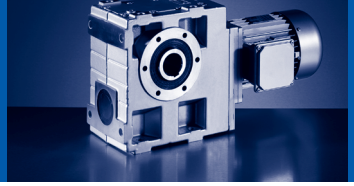

GSS06-3

				n_2 [r/min]											
				10	16	25	32	40	63	100	160	250	400	630	800
126.531	η_a	0.57	$\eta_{c=1}$	0.81	0.83	0.83	0.83	0.83	0.83	0.83	0.83	0.83	0.91	0.91	0.91
142.857	η_a	0.57	$\eta_{c=1}$	0.81	0.82	0.83	0.83	0.83	0.83	0.83	0.83	0.83			
155.000	η_a	0.57	$\eta_{c=1}$	0.81	0.83	0.83	0.83	0.83	0.83	0.83	0.83	0.83			
175.000	η_a	0.57	$\eta_{c=1}$	0.81	0.82	0.83	0.83	0.83	0.83	0.83	0.83	0.83			
194.857	η_a	0.57	$\eta_{c=1}$	0.81	0.83	0.83	0.83	0.83	0.83	0.83	0.83	0.83			
220.000	η_a	0.57	$\eta_{c=1}$	0.81	0.82	0.83	0.83	0.83	0.83	0.83	0.83	0.83			
238.700	η_a	0.57	$\eta_{c=1}$	0.81	0.83	0.83	0.83	0.83	0.83	0.83	0.83	0.83			
269.500	η_a	0.57	$\eta_{c=1}$	0.81	0.82	0.83	0.83	0.83	0.83	0.83	0.83	0.83			
310.689	η_a	0.57	$\eta_{c=1}$	0.81	0.83	0.83	0.83	0.83	0.83	0.83	0.83	0.83			
350.778	η_a	0.57	$\eta_{c=1}$	0.81	0.82	0.83	0.83	0.83	0.83	0.83	0.83	0.83			
386.467	η_a	0.57	$\eta_{c=1}$	0.81	0.83	0.83	0.83	0.83	0.83	0.83	0.83	0.83			
436.333	η_a	0.57	$\eta_{c=1}$	0.81	0.82	0.83	0.83	0.83	0.83	0.83	0.83	0.83			
497.722	η_a	0.57	$\eta_{c=1}$	0.81	0.83	0.83	0.83	0.83	0.83	0.83	0.83	0.83			
561.945	η_a	0.57	$\eta_{c=1}$	0.81	0.82	0.83	0.83	0.83	0.83	0.83	0.83	0.83			
630.803	η_a	0.57	$\eta_{c=1}$	0.81	0.83	0.83	0.83	0.83	0.83	0.83	0.83	0.83			
712.197	η_a	0.57	$\eta_{c=1}$	0.81	0.82	0.83	0.83	0.83	0.83	0.83	0.83	0.83			
816.333	η_a	0.57	$\eta_{c=1}$	0.81	0.83	0.83	0.83	0.83	0.83	0.83	0.83	0.83			
921.667	η_a	0.57	$\eta_{c=1}$	0.81	0.82	0.83	0.83	0.83	0.83	0.83	0.83	0.83			
1023.000	η_a	0.57	$\eta_{c=1}$	0.81	0.83	0.83	0.83	0.83	0.83	0.83	0.83	0.83			
1155.000	η_a	0.57	$\eta_{c=1}$	0.81	0.82	0.83	0.83	0.83	0.83	0.83	0.83	0.83			
1241.550	η_a	0.57	$\eta_{c=1}$	0.81	0.83	0.83	0.83	0.83	0.83	0.83	0.83	0.83			
1401.750	η_a	0.57	$\eta_{c=1}$	0.81	0.82	0.83	0.83	0.83	0.83	0.83	0.83	0.83			
1635.693	η_a	0.57	$\eta_{c=1}$	0.81	0.83	0.83	0.83	0.83	0.83	0.83	0.83	0.83			
1846.750	η_a	0.57	$\eta_{c=1}$	0.81	0.82	0.83	0.83	0.83	0.83	0.83	0.83	0.83			

GSS07-3

				n_2 [r/min]								
				10	16	25	32	40	63	100	160	250
126.531	η_a	0.60	$\eta_{c=1}$	0.84	0.85	0.85	0.85	0.85	0.85	0.85	0.85	0.85
142.857	η_a	0.60	$\eta_{c=1}$	0.84	0.84	0.85	0.85	0.85	0.85	0.85	0.85	0.85
155.000	η_a	0.60	$\eta_{c=1}$	0.84	0.85	0.85	0.85	0.85	0.85	0.85	0.85	0.85
175.000	η_a	0.60	$\eta_{c=1}$	0.84	0.84	0.85	0.85	0.85	0.85	0.85	0.85	0.85
201.746	η_a	0.60	$\eta_{c=1}$	0.84	0.85	0.85	0.85	0.85	0.85	0.85	0.85	0.85
227.778	η_a	0.60	$\eta_{c=1}$	0.84	0.84	0.85	0.85	0.85	0.85	0.85	0.85	0.85
247.139	η_a	0.60	$\eta_{c=1}$	0.84	0.85	0.85	0.85	0.85	0.85	0.85	0.85	0.85
279.028	η_a	0.60	$\eta_{c=1}$	0.84	0.84	0.85	0.85	0.85	0.85	0.85	0.85	0.85
321.673	η_a	0.60	$\eta_{c=1}$	0.84	0.85	0.85	0.85	0.85	0.85	0.85	0.85	0.85
363.179	η_a	0.60	$\eta_{c=1}$	0.84	0.84	0.85	0.85	0.85	0.85	0.85	0.85	0.85
394.245	η_a	0.60	$\eta_{c=1}$	0.84	0.85	0.85	0.85	0.85	0.85	0.85	0.85	0.85
445.116	η_a	0.60	$\eta_{c=1}$	0.84	0.84	0.85	0.85	0.85	0.85	0.85	0.85	0.85
490.403	η_a	0.60	$\eta_{c=1}$	0.84	0.85	0.85	0.85	0.85	0.85	0.85	0.85	0.85
553.681	η_a	0.60	$\eta_{c=1}$	0.84	0.84	0.85	0.85	0.85	0.85	0.85	0.85	0.85
634.639	η_a	0.60	$\eta_{c=1}$	0.84	0.85	0.85	0.85	0.85	0.85	0.85	0.85	0.85
716.528	η_a	0.60	$\eta_{c=1}$	0.84	0.84	0.85	0.85	0.85	0.85	0.85	0.85	0.85
833.556	η_a	0.60	$\eta_{c=1}$	0.84	0.85	0.85	0.85	0.85	0.85	0.85	0.85	0.85
941.111	η_a	0.60	$\eta_{c=1}$	0.84	0.84	0.85	0.85	0.85	0.85	0.85	0.85	0.85
1011.633	η_a	0.60	$\eta_{c=1}$	0.84	0.85	0.85	0.85	0.85	0.85	0.85	0.85	0.85
1142.167	η_a	0.60	$\eta_{c=1}$	0.84	0.84	0.85	0.85	0.85	0.85	0.85	0.85	0.85
1227.755	η_a	0.60	$\eta_{c=1}$	0.84	0.85	0.85	0.85	0.85	0.85	0.85	0.85	0.85
1386.175	η_a	0.60	$\eta_{c=1}$	0.84	0.84	0.85	0.85	0.85	0.85	0.85	0.85	0.85
1569.181	η_a	0.60	$\eta_{c=1}$	0.84	0.85	0.85	0.85	0.85	0.85	0.85	0.85	0.85
1771.656	η_a	0.60	$\eta_{c=1}$	0.84	0.84	0.85	0.85	0.85	0.85	0.85	0.85	0.85

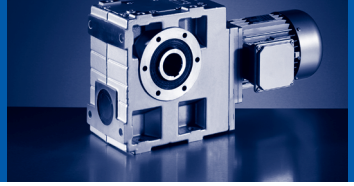

Position of ventilation, sealing elements and oil level check

GSS05...07-2

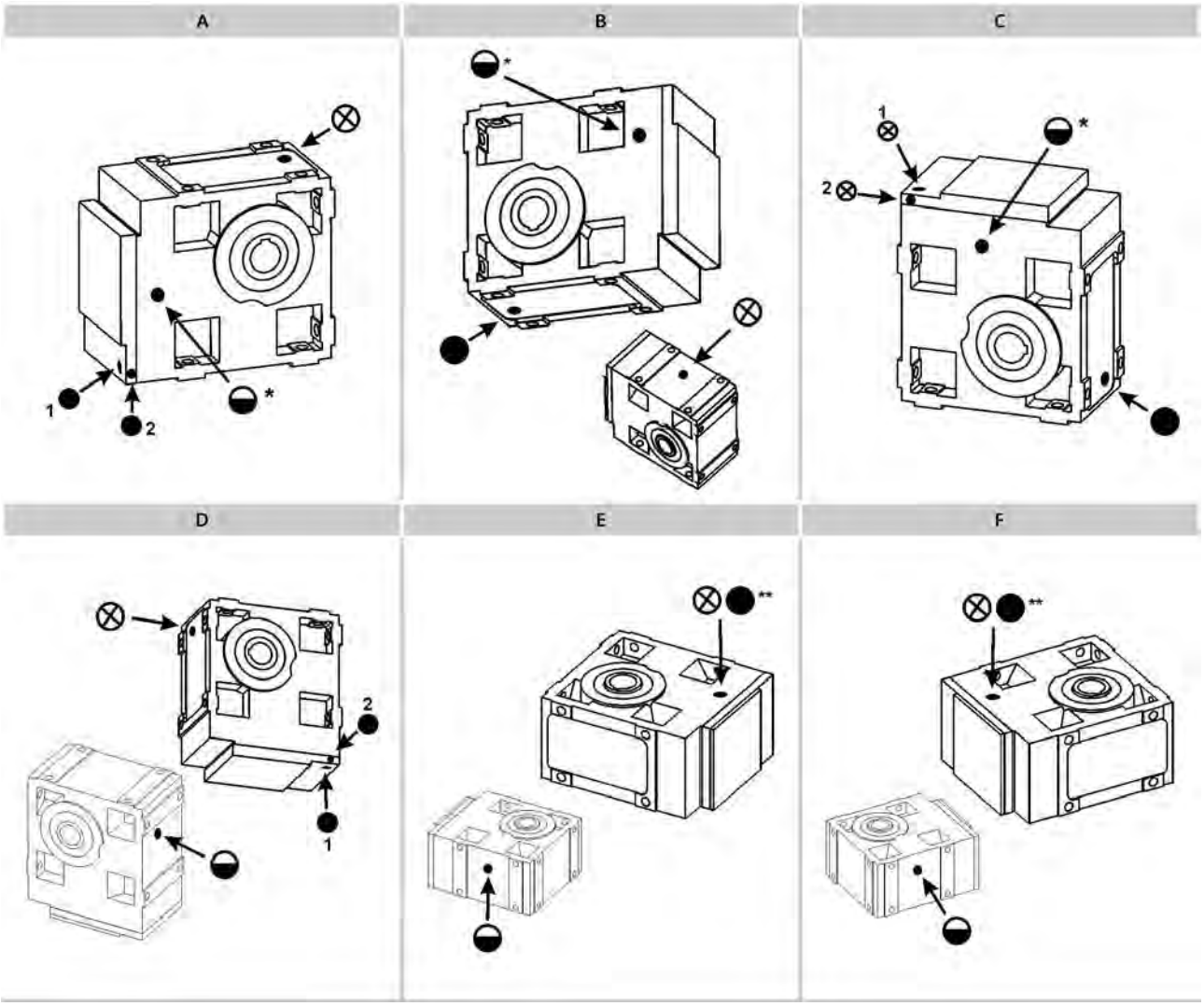

A ... F Mounting position
⊗ Ventilation / Oil filler plug
● Oil drain plug
◒ Oil control plug
* On both sides
** On opposite side

Item 1 standard
Item 2 only with:
- GSS05-2M □□□ 090C□□
- GSS05-2M □□□ 100C□□
- GSS06-2M □□□ 112C□□
- GSS07-2M □□□ 160C□□

GSS05...07-3

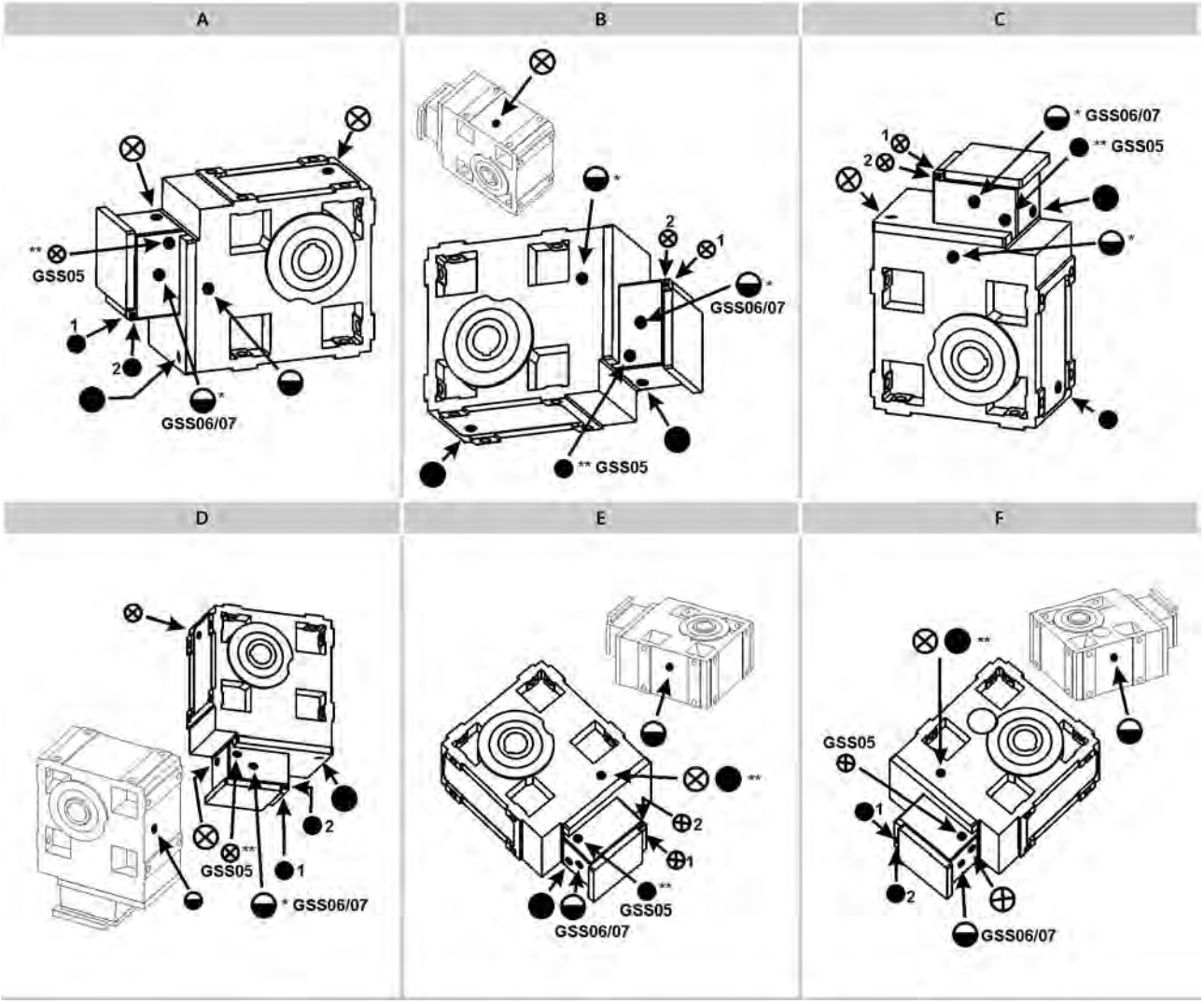

A ... F Mounting position
⊗ Ventilation / Oil filler plug
● Oil drain plug
◒ Oil control plug
* On both sides
** On opposite side

Item 1 standard
Item 2 only on:
- GSS07-3M □□□ 090C□□
- GSS07-3M □□□ 100C□□

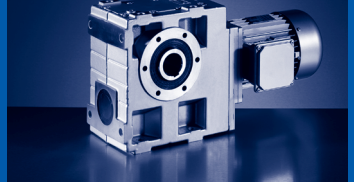

GSS□□-2M HAR / HBR

			063C11 063C12 063C31 063C32	063C42	071C11	071C13 071C31	071C32	071C33 071C42	080C11	080C13	080C31	080C32 080C33 080C42	090C11 090C31	090C32
GSS04	m	[kg]	16		18				22	23	22	23	30	28
GSS05	m	[kg]		26	27	28	27	28	31	32	31	32	39	37
GSS06	m	[kg]		38		40	39	40	44	45	44	45	52	50
GSS07	m	[kg]							69	70	69	70	77	75

			100C12	100C31	100C32	100C41	112C22	112C31	112C32	112C41	132C12	132C21	132C22 132C32	160C22	160C32
GSS05	m	[kg]	46	43	46	43									
GSS06	m	[kg]	59	56	59	56	67	64	74	71					
GSS07	m	[kg]	84	81	84	81	92	89	99	96	119	131	129	173	193

GSS□□-2M HAK

			063C11 063C12 063C31 063C32	063C42	071C11	071C13 071C31	071C32	071C33 071C42	080C11	080C13	080C31	080C32 080C33 080C42	090C11 090C31	090C32
GSS04	m	[kg]	18	19	20	21	20	21	25	26	25	26	32	30
GSS05	m	[kg]		30	31	32	31	32	35	36	35	36	43	41
GSS06	m	[kg]		45		47	46	47	51	52	51	52	59	57
GSS07	m	[kg]							80	81	80	81	88	86

			100C12	100C31	100C32	100C41	112C22	112C31	112C32	112C41	132C12	132C21	132C22 132C32	160C22	160C32
GSS05	m	[kg]	50	47	50	47									
GSS06	m	[kg]	66	63	66	63	74	71	81	78					
GSS07	m	[kg]	95	92	95	92	103	100	110	107	130	142	140	184	204

► Weights with oil filling for mounting position A; all values are approximate.
The weights relate to the basic version. Bear in mind that additional weights may be needed (e.g. for motor options).

GSS□□-2M VAR / VBR

			063C11 063C12 063C31 063C32	063C42	071C11	071C13 071C31	071C32	071C33	071C42	080C11	080C13	080C31	080C32 080C33 080C42	090C11 090C31	090C32
GSS04	m	[kg]	16	17	18	19	18	19		23	24	23	24	30	28
GSS05	m	[kg]		27	28	29	28	29		32	33	32	33	40	38
GSS06	m	[kg]		40		43	42	43	42	46	47	46	47	54	52
GSS07	m	[kg]								74	75	74	75	82	80

			100C12	100C31	100C32	100C41	112C22	112C31	112C32	112C41	132C12	132C21	132C22 132C32	160C22	160C32
GSS05	m	[kg]	47	44	47	44									
GSS06	m	[kg]	61	58	61	58	70	67	77	74					
GSS07	m	[kg]	89	86	89	86	97	94	104	101	124	136	134	178	198

GSS□□-2M VAK

			063C11 063C12 063C31 063C32	063C42	071C11	071C13 071C31	071C32	071C33	071C42	080C11	080C13	080C31	080C32 080C33 080C42	090C11 090C31	090C32
GSS04	m	[kg]	19				21			25	26	25	26	33	31
GSS05	m	[kg]		31	32	33	32	33		36	37	36	37	44	42
GSS06	m	[kg]		47		50	49	50	49	53	54	53	54	61	59
GSS07	m	[kg]								85	86	85	86	93	91

			100C12	100C31	100C32	100C41	112C22	112C31	112C32	112C41	132C12	132C21	132C22 132C32	160C22	160C32
GSS05	m	[kg]	51	48	51	48									
GSS06	m	[kg]	68	65	68	65	77	74	84	81					
GSS07	m	[kg]	100	97	100	97	108	105	115	112	135	147	145	189	209

► Weights with oil filling for mounting position A; all values are approximate.
The weights relate to the basic version. Bear in mind that additional weights may be needed (e.g. for motor options).

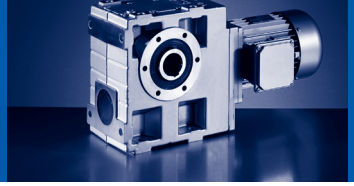

GSS□□-2M SAR / SBR

			063C11 063C12 063C31 063C32	063C42	071C11	071C13 071C31	071C32	071C33 071C42	080C11	080C13	080C31	080C32 080C33 080C42	090C11 090C31	090C32
GSS04	m	[kg]	16	17	18	19	18	19	23	24	23	24	30	28
GSS05	m	[kg]		26	28	29	28	29	32	33	32	33	40	38
GSS06	m	[kg]		39		41	40	41	45	46	45	46	53	51
GSS07	m	[kg]							70	71	70	71	78	76

			100C12	100C31	100C32	100C41	112C22	112C31	112C32	112C41	132C12	132C21	132C22 132C32	160C22	160C32
GSS05	m	[kg]	47	44	47	44									
GSS06	m	[kg]	60	57	60	57	68	65	75	72					
GSS07	m	[kg]	85	82	85	82	94	91	101	98	120	132	130	174	194

GSS□□-2M SAK

			063C11 063C12 063C31 063C32	063C42	071C11	071C13 071C31	071C32	071C33 071C42	080C11	080C13	080C31	080C32 080C33 080C42	090C11 090C31	090C32
GSS04	m	[kg]	19		21				25	26	25	26	33	31
GSS05	m	[kg]		30	32	33	32	33	36	37	36	37	44	42
GSS06	m	[kg]		46		48	47	48	52	53	52	53	60	58
GSS07	m	[kg]							81	82	81	82	89	87

			100C12	100C31	100C32	100C41	112C22	112C31	112C32	112C41	132C12	132C21	132C22 132C32	160C22	160C32
GSS05	m	[kg]	51	48	51	48									
GSS06	m	[kg]	67	64	67	64	75	72	82	79					
GSS07	m	[kg]	96	93	96	93	105	102	112	109	131	143	141	185	205

► Weights with oil filling for mounting position A; all values are approximate.
The weights relate to the basic version. Bear in mind that additional weights may be needed (e.g. for motor options).

GSS□□-3M HAR / HBR

			063C11 063C12 063C31 063C32	063C42	071C11	071C13 071C31	071C32	071C33	071C42
GSS05	m	[kg]	26		28	29	28	29	28
GSS06	m	[kg]	41	42	43	44	43	44	
GSS07	m	[kg]		71	73		72	73	

			080C11	080C13	080C31	080C32 080C33 080C42	090C11 090C31	090C32	100C12	100C31 100C41
GSS05	m	[kg]	33	34						
GSS06	m	[kg]	48	49	48	49	55			
GSS07	m	[kg]	77	78	77	78	84	82	91	88

GSS□□-3M HAK

			063C11 063C12 063C31 063C32	063C42	071C11	071C13 071C31	071C32	071C33	071C42
GSS05	m	[kg]	30		32	33	32	33	32
GSS06	m	[kg]	48	49	50	51	50	51	
GSS07	m	[kg]		82	84		83	84	

			080C11	080C13	080C31	080C32 080C33 080C42	090C11 090C31	090C32	100C12	100C31 100C41
GSS05	m	[kg]	37	38						
GSS06	m	[kg]	55	56	55	56	62			
GSS07	m	[kg]	88	89	88	89	95	93	102	99

► Weights with oil filling for mounting position A; all values are approximate.
The weights relate to the basic version. Bear in mind that additional weights may be needed (e.g. for motor options).

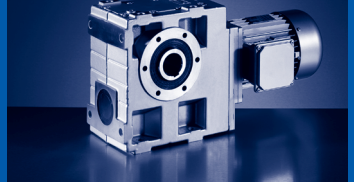

GSS□□-3M VAR / VBR

			063C11 063C12	063C31	063C32	063C42	071C11	071C13 071C31	071C32	071C33
GSS05	m	[kg]	27				29	30	29	30
GSS06	m	[kg]	44	43	44		46			
GSS07	m	[kg]				76	78		77	78

			071C42	080C11	080C13	080C31	080C32 080C33 080C42	090C11 090C31	090C32	100C12	100C31 100C41
GSS05	m	[kg]	29	34	35						
GSS06	m	[kg]	46	50	51	50	51	58			
GSS07	m	[kg]	78	82	83	82	83	89	87	96	93

GSS□□-3M VAK

			063C11 063C12	063C31	063C32	063C42	071C11	071C13 071C31	071C32	071C33
GSS05	m	[kg]	31				33	34	33	34
GSS06	m	[kg]	51	50	51		53			
GSS07	m	[kg]				87	89		88	89

			071C42	080C11	080C13	080C31	080C32 080C33 080C42	090C11 090C31	090C32	100C12	100C31 100C41
GSS05	m	[kg]	33	38	39						
GSS06	m	[kg]	53	57	58	57	58	65			
GSS07	m	[kg]	89	93	94	93	94	100	98	107	104

► Weights with oil filling for mounting position A; all values are approximate.
The weights relate to the basic version. Bear in mind that additional weights may be needed (e.g. for motor options).

GSS□□-3M SAR / SBR

			063C11 063C12 063C31 063C32	063C42	071C11	071C13 071C31	071C32	071C33	071C42
GSS05	m	[kg]	27		29				
GSS06	m	[kg]	42	43	44	45	44	45	
GSS07	m	[kg]		72	74	75	74	75	74

			080C11	080C13	080C31	080C32 080C33 080C42	090C11 090C31	090C32	100C12	100C31 100C41
GSS05	m	[kg]	33	34						
GSS06	m	[kg]	49	50	49	50	56			
GSS07	m	[kg]	78	79	78	79	86	84	93	90

GSS□□-3M SAK

			063C11 063C12 063C31 063C32	063C42	071C11	071C13 071C31	071C32	071C33	071C42
GSS05	m	[kg]	31		33				
GSS06	m	[kg]	49	50	51	52	51	52	
GSS07	m	[kg]		83	85	86	85	86	85

			080C11	080C13	080C31	080C32 080C33 080C42	090C11 090C31	090C32	100C12	100C31 100C41
GSS05	m	[kg]	37	38						
GSS06	m	[kg]	56	57	56	57	63			
GSS07	m	[kg]	89	90	89	90	97	95	104	101

► Weights with oil filling for mounting position A; all values are approximate.
The weights relate to the basic version. Bear in mind that additional weights may be needed (e.g. for motor options).

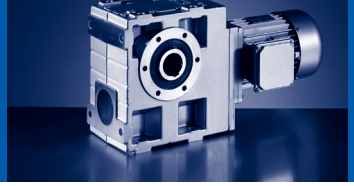

GSS□□-2M HAR / HBR

			080C32	090C12	090C32	100C12	100C32
GSS04	m	[kg]	23	29	31		
GSS05	m	[kg]	32	38	40	46	49
GSS06	m	[kg]	45	51	53	59	61
GSS07	m	[kg]	70	76	78	84	86

			112C22	132C12	132C22	160C22	160C32
GSS06	m	[kg]	74	96	103		
GSS07	m	[kg]	99	122	129	172	187

GSS□□-2M HAK

			080C32	090C12	090C32	100C12	100C32
GSS04	m	[kg]	26	31	33		
GSS05	m	[kg]	36	42	44	50	53
GSS06	m	[kg]	52	58	60	66	68
GSS07	m	[kg]	81	87	89	95	97

			112C22	132C12	132C22	160C22	160C32
GSS06	m	[kg]	81	103	110		
GSS07	m	[kg]	110	133	140	183	198

► Weights with oil filling for mounting position A; all values are approximate.
The weights relate to the basic version. Bear in mind that additional weights may be needed (e.g. for motor options).

GSS□□-2M VAR / VBR

			080C32	090C12	090C32	100C12	100C32
GSS04	m	[kg]	24	29	31		
GSS05	m	[kg]	33	39	41	47	50
GSS06	m	[kg]	47	53	55	61	64
GSS07	m	[kg]	75	81	83	89	91

			112C22	132C12	132C22	160C22	160C32
GSS06	m	[kg]	77	99	106		
GSS07	m	[kg]	104	127	134	177	192

GSS□□-2M VAK

			080C32	090C12	090C32	100C12	100C32
GSS04	m	[kg]	26	32	34		
GSS05	m	[kg]	37	43	45	51	54
GSS06	m	[kg]	54	60	62	68	71
GSS07	m	[kg]	86	92	94	100	102

			112C22	132C12	132C22	160C22	160C32
GSS06	m	[kg]	84	106	113		
GSS07	m	[kg]	115	138	145	188	203

► Weights with oil filling for mounting position A; all values are approximate.
The weights relate to the basic version. Bear in mind that additional weights may be needed (e.g. for motor options).

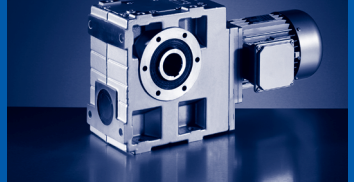

GSS□□-2M SAR / SBR

			080C32	090C12	090C32	100C12	100C32
GSS04	m	[kg]	24	29	31		
GSS05	m	[kg]	33	39	41	47	50
GSS06	m	[kg]	46	52	54	60	62
GSS07	m	[kg]	71	77	79	85	88

			112C22	132C12	132C22	160C22	160C32
GSS06	m	[kg]	75	97	104		
GSS07	m	[kg]	101	123	130	173	188

GSS□□-2M SAK

			080C32	090C12	090C32	100C12	100C32
GSS04	m	[kg]	26	32	34		
GSS05	m	[kg]	37	43	45	51	54
GSS06	m	[kg]	53	59	61	67	69
GSS07	m	[kg]	82	88	90	96	99

			112C22	132C12	132C22	160C22	160C32
GSS06	m	[kg]	82	104	111		
GSS07	m	[kg]	112	134	141	184	199

► Weights with oil filling for mounting position A; all values are approximate.
The weights relate to the basic version. Bear in mind that additional weights may be needed (e.g. for motor options).

GSS□□-3M HAR / HBR

			080C32	090C12	090C32	100C12
GSS06	m	[kg]	49	54		
GSS07	m	[kg]	78	83	85	91

GSS□□-3M HAK

			080C32	090C12	090C32	100C12
GSS06	m	[kg]	56	61		
GSS07	m	[kg]	89	94	96	102

GSS□□-3M VAR / VBR

			080C32	090C12	090C32	100C12
GSS06	m	[kg]	51	57		
GSS07	m	[kg]	83	88	90	96

GSS□□-3M VAK

			080C32	090C12	090C32	100C12
GSS06	m	[kg]	58	64		
GSS07	m	[kg]	94	99	101	107

GSS□□-3M SAR / SBR

			080C32	090C12	090C32	100C12
GSS06	m	[kg]	50	55		
GSS07	m	[kg]	79	85	87	93

GSS□□-3M SAK

			080C32	090C12	090C32	100C12
GSS06	m	[kg]	57	62		
GSS07	m	[kg]	90	96	98	104

► Weights with oil filling for mounting position A; all values are approximate.
The weights relate to the basic version. Bear in mind that additional weights may be needed (e.g. for motor options).

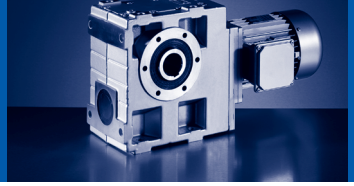

50 Hz: P_N=0.12 kW
60 Hz: P_N=0.145 kW
87 Hz: P_N=0.21 kW

n_N	1425 r/min		1725 r/min		2535 r/min		M_2 [Nm]	i		
f_N	50 Hz		60 Hz		87 Hz					
P_N	0.12 kW		0.145 kW		0.21 kW					
	n_2 [r/min]	c	n_2 [r/min]	c	n_2 [r/min]	c				
	132	5.4	159	5.4	234	5.4	8.0	10.827	GSS04-2M □□□063C12	802
	103	5.0	125	5.0	184	5.0	10	13.810	GSS04-2M □□□063C12	802
	82	5.4	99	5.4	146	5.4	12	17.360	GSS04-2M □□□063C12	802
	64	5.0	78	5.0	115	5.0	15	22.143	GSS04-2M □□□063C12	802
	42	5.5	51	5.5	74	5.5	22	34.100	GSS04-2M □□□063C12	802
	36	5.4	44	5.4	65	5.4	23	39.200	GSS04-2M □□□063C12	802
	32	4.6	39	4.6	58	4.6	29	43.917	GSS04-2M □□□063C12	802
	29	5.0	35	5.0	51	5.0	29	50.000	GSS04-2M □□□063C12	802
	21	4.2	25	4.2	37	4.1	41	68.200	GSS04-2M □□□063C12	802
	19	3.9	22	3.8	33	3.7	45	77.000	GSS04-2M □□□063C12	802
	16	3.3	20	3.3	29	3.2	52	87.833	GSS04-2M □□□063C12	802
	14	3.1	17	3.0	26	3.0	57	99.167	GSS04-2M □□□063C12	802
	13	2.7	16	2.7	23	2.6	66	111.318	GSS04-2M □□□063C12	802
	11	2.5	14	2.4	20	2.4	72	125.682	GSS04-2M □□□063C12	802
	10	2.2	12	2.1	18	2.1	82	139.500	GSS04-2M □□□063C12	802
	9.1	2.0	11	2.0	16	1.9	89	157.500	GSS04-2M □□□063C12	802
	7.8	1.7	9.4	1.7	14	1.6	106	183.786	GSS04-2M □□□063C12	802
	7.4	2.9	8.9	2.8	13	2.6	122	193.233	GSS05-3M □□□063C12	810
	6.9	1.5	8.3	1.5	12	1.5	116	207.500	GSS04-2M □□□063C12	802
	6.4	2.7	7.8	2.7	11	2.6	131	222.133	GSS05-3M □□□063C12	810
	5.7	2.4	6.9	2.3	10	2.3	148	250.952	GSS05-3M □□□063C12	810
	5	2.2	6.1	2.1	9	2.1	163	283.333	GSS05-3M □□□063C12	810
	4.6	4.1	5.6	4.0	8.2	3.9	169	310.689	GSS06-3M □□□063C12	810
	4.1	3.7	4.9	3.6	7.2	3.5	187	350.778	GSS06-3M □□□063C12	810
	3.7	1.6	4.5	1.6	6.6	1.5	218	386.467	GSS05-3M □□□063C12	810
	3.3	1.5	4	1.5	5.8	1.4	239	436.333	GSS05-3M □□□063C12	810
	3.3	3.0	4	3.0	5.8	2.9	230	436.333	GSS06-3M □□□063C12	810
	2.9	1.3	3.5	1.3	5.1	1.2	272	497.722	GSS05-3M □□□063C12	810
	2.9	2.7	3.5	2.6	5.1	2.5	263	497.722	GSS06-3M □□□063C12	810
	2.5	1.2	3.1	1.2	4.5	1.1	298	561.944	GSS05-3M □□□063C12	810
	2.5	2.4	3.1	2.4	4.5	2.3	290	561.944	GSS06-3M □□□063C12	810
	2.3	1.1	2.7	1.1	4	1.0	335	630.803	GSS05-3M □□□063C12	810
	2.3	2.2	2.7	2.1	4	2.0	327	630.803	GSS06-3M □□□063C12	810
	2	1.0	2.4	1.0	3.6	0.9	367	712.197	GSS05-3M □□□063C12	810
	2	2.0	2.4	1.9	3.6	1.9	361	712.197	GSS06-3M □□□063C12	810
	1.8	0.9	2.2	0.9	3.2	0.8	407	790.500	GSS05-3M □□□063C12	810
	1.8	1.7	2.1	1.7	3.1	1.6	415	816.333	GSS06-3M □□□063C12	810
	1.6	0.8					445	892.500	GSS05-3M □□□063C12	810
	1.6	1.6	1.9	1.5	2.8	1.5	459	921.667	GSS06-3M □□□063C12	810
	1.4	1.4	1.7	1.4	2.5	1.3	512	1023.000	GSS06-3M □□□063C12	810
	1.2	1.2	1.4	1.2	2	1.1	614	1241.550	GSS06-3M □□□063C12	810

50 Hz: P_N=0.12 kW
60 Hz: P_N=0.145 kW
87 Hz: P_N=0.21 kW

n_N	1425 r/min		1725 r/min		2535 r/min		M_2 [Nm]	i		
f_N	50 Hz		60 Hz		87 Hz					
P_N	0.12 kW		0.145 kW		0.21 kW					
	n_2 [r/min]	c	n_2 [r/min]	c	n_2 [r/min]	c				
	1.2	1.3	1.5	1.3	2.2	1.2	567	1155.000	GSS06-3M □□□063C12	810
	1	1.1	1.2	1.0	1.8	1.0	681	1401.750	GSS06-3M □□□063C12	810
	0.9	0.9	1.1	0.9	1.6	0.9	797	1635.693	GSS06-3M □□□063C12	810
	0.8	0.8	0.9	0.8			886	1846.750	GSS06-3M □□□063C12	810

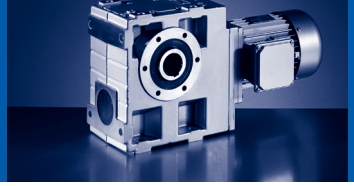

50 Hz: P_N=0.18 kW
60 Hz: P_N=0.22 kW

n_N	2740 r/min		3340 r/min				M_2 [Nm]	i		
f_N	50 Hz		60 Hz							
P_N	0.18 kW		0.22 kW							
	n_2 [r/min]	c	n_2 [r/min]	c						
	62	5.9	76	5.9			23	43.917	GSS04-2M □□□063C11	802
	40	5.3	49	5.1			32	68.200	GSS04-2M □□□063C11	802
	36	4.8	43	4.7			36	77.000	GSS04-2M □□□063C11	802
	31	4.1	38	4.1			42	87.833	GSS04-2M □□□063C11	802
	28	3.8	34	3.7			46	99.167	GSS04-2M □□□063C11	802
	25	3.3	30	3.3			53	111.318	GSS04-2M □□□063C11	802
	22	3.0	27	3.0			58	125.682	GSS04-2M □□□063C11	802
	20	2.7	24	2.6			66	139.500	GSS04-2M □□□063C11	802
	17	2.4	21	2.4			73	157.500	GSS04-2M □□□063C11	802
	15	2.1	18	2.0			87	183.786	GSS04-2M □□□063C11	802
	14	3.1	17	3.0			100	193.233	GSS05-3M □□□063C11	810
	13	1.9	16	1.9			95	207.500	GSS04-2M □□□063C11	802
	12	3.3	15	3.3			106	222.133	GSS05-3M □□□063C11	810
	11	2.9	13	2.9			122	250.952	GSS05-3M □□□063C11	810
	9.7	2.6	12	2.6			135	283.333	GSS05-3M □□□063C11	810
	8.8	5.0	11	4.9			136	310.689	GSS06-3M □□□063C11	810
	7.8	4.5	9.5	4.5			152	350.778	GSS06-3M □□□063C11	810
	7.1	1.9	8.6	1.9			184	386.467	GSS05-3M □□□063C11	810
	6.3	1.8	7.7	1.7			203	436.333	GSS05-3M □□□063C11	810
	5.5	1.5	6.7	1.5			232	497.722	GSS05-3M □□□063C11	810
	5.5	3.2	6.7	3.2			218	497.722	GSS06-3M □□□063C11	810
	4.9	1.4	5.9	1.4			255	561.944	GSS05-3M □□□063C11	810
	4.9	2.9	5.9	2.9			242	561.944	GSS06-3M □□□063C11	810
	4.3	1.3	5.3	1.2			286	630.803	GSS05-3M □□□063C11	810
	4.3	2.6	5.3	2.5			273	630.803	GSS06-3M □□□063C11	810
	3.9	1.1	4.7	1.1			314	712.197	GSS05-3M □□□063C11	810
	3.9	2.3	4.7	2.3			302	712.197	GSS06-3M □□□063C11	810
	3.5	1.0	4.2	1.0			349	790.500	GSS05-3M □□□063C11	810
	3.4	2.1	4.1	2.0			347	816.333	GSS06-3M □□□063C11	810
	3.1	0.9	3.7	0.9			383	892.500	GSS05-3M □□□063C11	810
	3	1.9	3.6	1.8			383	921.667	GSS06-3M □□□063C11	810
	2.7	1.7	3.3	1.6			426	1023.000	GSS06-3M □□□063C11	810
	2.6	0.8					445	1041.452	GSS05-3M □□□063C11	810
	2.4	1.5	2.9	1.5			470	1155.000	GSS06-3M □□□063C11	810
	2.2	1.4	2.7	1.4			509	1241.550	GSS06-3M □□□063C11	810
	2	1.3	2.4	1.3			562	1401.750	GSS06-3M □□□063C11	810
	1.7	1.1	2	1.1			655	1635.693	GSS06-3M □□□063C11	810
	1.5	1.0	1.8	1.0			724	1846.750	GSS06-3M □□□063C11	810

50 Hz: P_N=0.18 kW
60 Hz: P_N=0.22 kW
87 Hz: P_N=0.33 kW

n_N	1365 r/min		1665 r/min		2475 r/min		M_2 [Nm]	i		
f_N	50 Hz		60 Hz		87 Hz					
P_N	0.18 kW		0.22 kW		0.33 kW					
	n_2 [r/min]	c	n_2 [r/min]	c	n_2 [r/min]	c				
	126	3.4	154	3.4	229	3.4	12	10.827	GSS04-2M □□□063C32	802
	99	3.2	121	3.2	179	3.2	16	13.810	GSS04-2M □□□063C32	802
	79	3.4	96	3.4	143	3.4	19	17.360	GSS04-2M □□□063C32	802
	62	3.2	75	3.2	112	3.2	24	22.143	GSS04-2M □□□063C32	802
	40	3.5	49	3.5	73	3.5	36	34.100	GSS04-2M □□□063C32	802
	35	3.4	43	3.4	63	3.4	37	39.200	GSS04-2M □□□063C32	802
	31	2.9	38	2.9	56	2.9	46	43.917	GSS04-2M □□□063C32	802
	27	3.2	33	3.2	50	3.2	47	50.000	GSS04-2M □□□063C32	802
	20	2.7	24	2.7	36	2.6	65	68.200	GSS04-2M □□□063C32	802
	18	2.5	22	2.4	32	2.4	72	77.000	GSS04-2M □□□063C32	802
	16	2.1	19	2.1	28	2.1	83	87.833	GSS04-2M □□□063C32	802
	14	2.0	17	1.9	25	1.9	91	99.167	GSS04-2M □□□063C32	802
	12	1.7	15	1.7	22	1.7	104	111.318	GSS04-2M □□□063C32	802
	11	1.6	13	1.5	20	1.5	114	125.682	GSS04-2M □□□063C32	802
	11	2.6	13	2.5	20	2.2	129	125.476	GSS05-3M □□□063C32	810
	11	3.2	13	3.2	20	3.2	116	126.531	GSS06-3M □□□063C32	810
	9.8	1.4	12	1.4	18	1.3	129	139.500	GSS04-2M □□□063C32	802
	9.6	3.2	12	3.2	17	3.2	128	142.857	GSS06-3M □□□063C32	810
	8.8	3.2	11	3.2	16	3.2	140	155.000	GSS06-3M □□□063C32	810
	8.7	1.3	11	1.3	16	1.2	141	157.500	GSS04-2M □□□063C32	802
	7.8	3.2	9.5	3.2	14	3.2	156	175.000	GSS06-3M □□□063C32	810
	7.4	1.1	9.1	1.1	14	1.0	168	183.786	GSS04-2M □□□063C32	802
	7.1	1.8	8.6	1.8	13	1.6	193	193.233	GSS05-3M □□□063C32	810
	6.6	1.0	8	1.0	12	0.9	183	207.500	GSS04-2M □□□063C32	802
	6.1	1.7	7.5	1.7	11	1.7	208	222.133	GSS05-3M □□□063C32	810
	5.4	1.5	6.6	1.5	9.9	1.5	235	250.952	GSS05-3M □□□063C32	810
	5.1	3.0	6.2	3.0	9.2	2.9	233	269.500	GSS06-3M □□□063C32	810
	4.8	1.4	5.9	1.4	8.7	1.3	258	283.333	GSS05-3M □□□063C32	810
	4.4	2.6	5.4	2.6	8	2.5	270	310.689	GSS06-3M □□□063C32	810
	3.9	2.4	4.8	2.3	7.1	2.3	299	350.778	GSS06-3M □□□063C32	810
	3.5	1.1	4.3	1.0	6.4	1.0	344	386.467	GSS05-3M □□□063C32	810
	3.5	2.1	4.3	2.1	6.4	2.0	331	386.467	GSS06-3M □□□063C32	810
	3.1	1.0	3.8	0.9	5.7	0.9	377	436.333	GSS05-3M □□□063C32	810
	3.1	1.9	3.8	1.9	5.7	1.8	365	436.333	GSS06-3M □□□063C32	810
	2.7	0.8	3.4	0.8			429	497.722	GSS05-3M □□□063C32	810
	2.7	1.7	3.4	1.7	5	1.6	417	497.722	GSS06-3M □□□063C32	810
	2.4	1.6	3	1.5	4.4	1.5	460	561.944	GSS06-3M □□□063C32	810
	2.2	1.4	2.6	1.4	3.9	1.3	518	630.803	GSS06-3M □□□063C32	810
	1.9	1.3	2.3	1.2	3.5	1.2	572	712.197	GSS06-3M □□□063C32	810
	1.7	1.1	2	1.1	3	1.0	656	816.333	GSS06-3M □□□063C32	810
	1.5	1.0	1.8	1.0	2.7	0.9	725	921.667	GSS06-3M □□□063C32	810

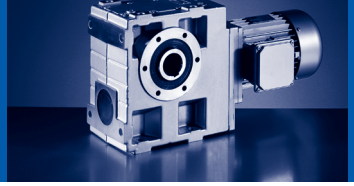

50 Hz: P_N=0.18 kW
60 Hz: P_N=0.22 kW
87 Hz: P_N=0.33 kW

n_N	1365 r/min		1665 r/min		2475 r/min		M_2 [Nm]	i		
f_N	50 Hz		60 Hz		87 Hz					
P_N	0.18 kW		0.22 kW		0.33 kW					
	n_2 [r/min]	c	n_2 [r/min]	c	n_2 [r/min]	c				
	1.3	0.9	1.6	0.9	2.4	0.9	808	1023.000	GSS06-3M □□□063C32	810
	1.2	0.8					895	1155.000	GSS06-3M □□□063C32	810

50 Hz: P_N=0.18 kW
60 Hz: P_N=0.22 kW

n_N	930 r/min		1130 r/min				M_2 [Nm]	i		
f_N	50 Hz		60 Hz							
P_N	0.18 kW		0.22 kW							
	n_2 [r/min]	c	n_2 [r/min]	c						
	165	5.4	200	5.4			9.0	5.639	GSS04-2M □□□071C13	802
	120	5.4	146	5.4			12	7.733	GSS04-2M □□□071C13	802
	103	5.4	125	5.4			14	9.042	GSS04-2M □□□071C13	802
	86	5.4	104	5.4			18	10.827	GSS05-2M □□□071C13	802
	75	5.4	91	5.4			19	12.400	GSS04-2M □□□071C13	802
	67	5.7	82	5.7			22	13.810	GSS04-2M □□□071C13	802
	54	5.4	65	5.4			27	17.360	GSS05-2M □□□071C13	802
	46	5.4	55	5.4			28	20.417	GSS04-2M □□□071C13	802
	42	5.1	51	5.1			34	22.143	GSS04-2M □□□071C13	802
	38	4.9	46	4.9			35	24.800	GSS04-2M □□□071C13	802
	34	4.2	42	4.2			41	27.125	GSS04-2M □□□071C13	802
	29	3.9	36	3.9			45	31.738	GSS04-2M □□□071C13	802
	27	3.4	33	3.4			52	34.100	GSS04-2M □□□071C13	802
	24	3.3	29	3.2			54	39.200	GSS04-2M □□□071C13	802
	21	2.7	26	2.6			66	43.917	GSS04-2M □□□071C13	802
	19	2.6	23	2.6			68	50.000	GSS04-2M □□□071C13	802
	17	2.4	21	2.3			75	54.250	GSS04-2M □□□071C13	802
	15	2.1	18	2.1			83	61.250	GSS04-2M □□□071C13	802
	14	1.9	17	1.9			94	68.200	GSS04-2M □□□071C13	802
	12	1.7	15	1.7			103	77.000	GSS04-2M □□□071C13	802
	12	3.1	14	3.0			114	79.722	GSS05-2M □□□071C13	802
	11	1.5	13	1.5			119	87.833	GSS04-2M □□□071C13	802
	11	2.8	13	2.7			127	87.833	GSS05-2M □□□071C13	802
	9.4	1.4	11	1.4			130	99.167	GSS04-2M □□□071C13	802
	9.4	2.5	11	2.5			140	99.167	GSS05-2M □□□071C13	802
	8.4	1.2	10	1.2			150	111.318	GSS04-2M □□□071C13	802
	8.2	2.2	9.9	2.2			163	113.667	GSS05-2M □□□071C13	802
	7.4	1.1	9	1.1			163	125.682	GSS04-2M □□□071C13	802
	7.4	1.8	9	1.8			185	125.476	GSS05-3M □□□071C13	810
	7.3	2.0	8.8	2.0			180	128.333	GSS05-2M □□□071C13	802
	6.7	1.0	8.1	1.0			184	139.500	GSS04-2M □□□071C13	802
	6.7	1.8	8.2	1.8			195	137.950	GSS05-2M □□□071C13	802
	6.1	1.5	7.4	1.5			223	153.708	GSS05-3M □□□071C13	810
	6	1.7	7.3	1.6			215	155.750	GSS05-2M □□□071C13	802
	5.9	0.9	7.2	0.9			200	157.500	GSS04-2M □□□071C13	802
	5.3	1.5	6.4	1.4			243	176.313	GSS05-2M □□□071C13	802
	5.3	3.0	6.5	3.0			235	174.375	GSS06-2M □□□071C13	802
	5.3	3.2	6.5	3.1			222	175.000	GSS06-3M □□□071C13	810
	4.8	1.3	5.9	1.3			275	193.233	GSS05-3M □□□071C13	810
	4.8	2.8	5.8	2.8			249	194.857	GSS06-3M □□□071C13	810
	4.7	1.3	5.7	1.3			267	199.063	GSS05-2M □□□071C13	802

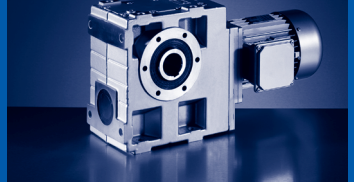

50 Hz: P_N=0.18 kW
60 Hz: P_N=0.22 kW

n_N	930 r/min		1130 r/min				M_2 [Nm]	i		
f_N	50 Hz		60 Hz							
P_N	0.18 kW		0.22 kW							
	n_2 [r/min]	c	n_2 [r/min]	c						
	4.7	2.7	5.7	2.7			261	196.875	GSS06-2M □□□071C13	802
	4.2	1.2	5.1	1.2			290	222.133	GSS05-3M □□□071C13	810
	4.2	2.6	5.1	2.5			276	220.000	GSS06-3M □□□071C13	810
	3.9	2.4	4.7	2.3			301	238.700	GSS06-3M □□□071C13	810
	3.7	1.1	4.5	1.1			328	250.952	GSS05-3M □□□071C13	810
	3.5	2.1	4.2	2.1			332	269.500	GSS06-3M □□□071C13	810
	3.3	1.0	4	1.0			359	283.333	GSS05-3M □□□071C13	810
	3	0.9	3.7	0.9			392	307.417	GSS05-3M □□□071C13	810
	3	1.9	3.6	1.8			383	310.689	GSS06-3M □□□071C13	810
	2.9	3.0	3.5	2.9			412	321.673	GSS07-3M □□□071C13	810
	2.7	0.8	3.3	0.8			429	347.083	GSS05-3M □□□071C13	810
	2.7	1.7	3.2	1.7			423	350.778	GSS06-3M □□□071C13	810
	2.6	2.7	3.1	2.6			457	363.179	GSS07-3M □□□071C13	810
	2.4	1.5	2.9	1.5			468	386.467	GSS06-3M □□□071C13	810
	2.4	2.5	2.9	2.4			498	394.245	GSS07-3M □□□071C13	810
	2.1	1.4	2.6	1.4			517	436.333	GSS06-3M □□□071C13	810
	2.1	2.2	2.5	2.2			553	445.116	GSS07-3M □□□071C13	810
	1.9	1.2	2.3	1.2			590	497.722	GSS06-3M □□□071C13	810
	1.9	2.0	2.3	2.0			610	490.403	GSS07-3M □□□071C13	810
	1.7	1.1	2	1.1			652	561.944	GSS06-3M □□□071C13	810
	1.7	1.8	2	1.8			676	553.681	GSS07-3M □□□071C13	810
	1.5	1.0	1.8	1.0			734	630.803	GSS06-3M □□□071C13	810
	1.5	1.6	1.8	1.6			775	634.639	GSS07-3M □□□071C13	810
	1.3	0.9	1.6	0.9			813	712.197	GSS06-3M □□□071C13	810
	1.3	1.5	1.6	1.4			858	716.528	GSS07-3M □□□071C13	810
	1.1	1.3	1.4	1.2			1000	833.556	GSS07-3M □□□071C13	810
	1	1.1	1.2	1.1			1106	941.111	GSS07-3M □□□071C13	810
	0.9	1.0	1.1	1.0			1200	1011.633	GSS07-3M □□□071C13	810
	0.8	0.9	1	0.9			1327	1142.167	GSS07-3M □□□071C13	810
	0.8	0.9	0.9	0.9			1442	1227.755	GSS07-3M □□□071C13	810

50 Hz: P_N=0.25 kW
60 Hz: P_N=0.31 kW

n_N	2710 r/min		3310 r/min				M_2 [Nm]	i		
f_N	50 Hz		60 Hz							
P_N	0.25 kW		0.31 kW							
	n_2 [r/min]	c	n_2 [r/min]	c						
	250	4.9	306	4.9			8.0	10.827	GSS04-2M □□□063C31	802
	196	4.6	240	4.6			11	13.810	GSS04-2M □□□063C31	802
	156	4.9	191	4.9			13	17.360	GSS04-2M □□□063C31	802
	122	4.6	150	4.6			17	22.143	GSS04-2M □□□063C31	802
	80	5.0	97	5.0			25	34.100	GSS04-2M □□□063C31	802
	69	4.9	84	4.9			26	39.200	GSS04-2M □□□063C31	802
	62	4.2	75	4.2			32	43.917	GSS04-2M □□□063C31	802
	54	4.6	66	4.4			33	50.000	GSS04-2M □□□063C31	802
	40	3.8	49	3.7			46	68.200	GSS04-2M □□□063C31	802
	35	3.4	43	3.3			51	77.000	GSS04-2M □□□063C31	802
	31	2.9	38	2.9			60	87.833	GSS04-2M □□□063C31	802
	27	2.7	33	2.6			66	99.167	GSS04-2M □□□063C31	802
	24	2.3	30	2.3			76	111.318	GSS04-2M □□□063C31	802
	22	2.1	26	2.1			83	125.682	GSS04-2M □□□063C31	802
	22	3.0	26	2.8			93	125.476	GSS05-3M □□□063C31	810
	19	1.9	24	1.9			94	139.500	GSS04-2M □□□063C31	802
	17	1.7	21	1.7			103	157.500	GSS04-2M □□□063C31	802
	15	1.5	18	1.4			122	183.786	GSS04-2M □□□063C31	802
	14	2.2	17	2.1			142	193.233	GSS05-3M □□□063C31	810
	13	1.3	16	1.3			134	207.500	GSS04-2M □□□063C31	802
	12	2.3	15	2.3			151	222.133	GSS05-3M □□□063C31	810
	11	2.1	13	2.0			173	250.952	GSS05-3M □□□063C31	810
	9.6	1.9	12	1.8			191	283.333	GSS05-3M □□□063C31	810
	8.7	3.6	11	3.5			195	310.689	GSS06-3M □□□063C31	810
	7.7	3.2	9.4	3.2			218	350.778	GSS06-3M □□□063C31	810
	7	1.4	8.6	1.4			260	386.467	GSS05-3M □□□063C31	810
	7	2.9	8.6	2.9			242	386.467	GSS06-3M □□□063C31	810
	6.2	1.3	7.6	1.2			288	436.333	GSS05-3M □□□063C31	810
	6.2	2.6	7.6	2.6			270	436.333	GSS06-3M □□□063C31	810
	5.4	1.1	6.7	1.1			328	497.722	GSS05-3M □□□063C31	810
	5.4	2.3	6.7	2.3			310	497.722	GSS06-3M □□□063C31	810
	4.8	1.0	5.9	1.0			360	561.944	GSS05-3M □□□063C31	810
	4.8	2.1	5.9	2.0			344	561.944	GSS06-3M □□□063C31	810
	4.3	0.9	5.3	0.9			404	630.803	GSS05-3M □□□063C31	810
	4.3	1.8	5.3	1.8			387	630.803	GSS06-3M □□□063C31	810
	3.8	0.8					443	712.197	GSS05-3M □□□063C31	810
	3.8	1.7	4.7	1.6			428	712.197	GSS06-3M □□□063C31	810
	3.3	1.5	4.1	1.4			491	816.333	GSS06-3M □□□063C31	810
	2.9	1.3	3.6	1.3			542	921.667	GSS06-3M □□□063C31	810
	2.7	1.2	3.2	1.2			603	1023.000	GSS06-3M □□□063C31	810
	2.4	1.1	2.9	1.1			665	1155.000	GSS06-3M □□□063C31	810

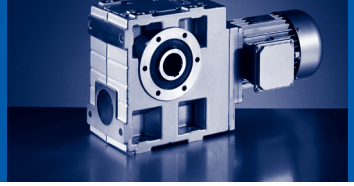

50 Hz: P_N=0.25 kW
60 Hz: P_N=0.31 kW

n_N	2710 r/min		3310 r/min				M_2 [Nm]	i		
f_N	50 Hz		60 Hz							
P_N	0.25 kW		0.31 kW							
	n_2 [r/min]	c	n_2 [r/min]	c						
	2.2	1.0	2.7	1.0			719	1241.550	GSS06-3M □□□063C31	810
	1.9	0.9	2.4	0.9			793	1401.750	GSS06-3M □□□063C31	810

50 Hz: P_N=0.25 kW
60 Hz: P_N=0.31 kW
87 Hz: P_N=0.45 kW

n_N	1370 r/min		1670 r/min		2480 r/min		M_2 [Nm]	i		
f_N	50 Hz		60 Hz		87 Hz					
P_N	0.25 kW		0.31 kW		0.45 kW					
	n_2 [r/min]	c	n_2 [r/min]	c	n_2 [r/min]	c				
	243	4.6	296	4.6	440	4.6	9.0	5.639	GSS04-2M □□□063C42	802
	177	4.6	216	4.6	321	4.6	12	7.733	GSS04-2M □□□063C42	802
	152	4.6	185	4.6	274	4.6	13	9.042	GSS04-2M □□□063C42	802
	138	5.2	169	5.2	251	5.2	15	9.897	GSS04-2M □□□063C42	802
	127	4.6	154	4.6	229	4.6	17	10.827	GSS05-2M □□□063C42	802
	111	4.6	135	4.6	200	4.6	18	12.400	GSS04-2M □□□063C42	802
	99	4.8	121	4.8	180	4.8	21	13.810	GSS04-2M □□□063C42	802
	86	5.2	105	5.2	156	5.2	23	15.869	GSS04-2M □□□063C42	802
	79	4.6	96	4.6	143	4.6	26	17.360	GSS05-2M □□□063C42	802
	67	4.6	82	4.6	122	4.4	27	20.417	GSS04-2M □□□063C42	802
	62	4.8	75	4.8	112	4.8	32	22.143	GSS04-2M □□□063C42	802
	55	4.6	67	4.6	100	4.0	34	24.800	GSS04-2M □□□063C42	802
	51	4.3	62	4.3	91	4.3	39	27.125	GSS04-2M □□□063C42	802
	43	4.1	53	3.9	78	3.4	43	31.738	GSS04-2M □□□063C42	802
	40	3.5	49	3.5	73	3.5	50	34.100	GSS04-2M □□□063C42	802
	35	3.4	43	3.3	63	2.9	52	39.200	GSS04-2M □□□063C42	802
	31	2.8	38	2.8	57	2.7	64	43.917	GSS04-2M □□□063C42	802
	27	2.7	33	2.7	50	2.5	66	50.000	GSS04-2M □□□063C42	802
	25	2.4	31	2.4	46	2.4	73	54.250	GSS04-2M □□□063C42	802
	22	2.2	27	2.2	41	2.2	80	61.250	GSS04-2M □□□063C42	802
	20	2.0	25	1.9	36	1.9	91	68.200	GSS04-2M □□□063C42	802
	18	1.8	22	1.8	32	1.7	100	77.000	GSS04-2M □□□063C42	802
	17	3.2	21	3.2	31	3.0	110	79.722	GSS05-2M □□□063C42	802
	16	1.5	19	1.5	28	1.5	116	87.833	GSS04-2M □□□063C42	802
	16	2.9	19	2.9	28	2.9	122	87.833	GSS05-2M □□□063C42	802
	14	1.4	17	1.4	25	1.4	127	99.167	GSS04-2M □□□063C42	802
	14	2.6	17	2.6	25	2.6	136	99.167	GSS05-2M □□□063C42	802
	12	1.2	15	1.2	22	1.2	145	111.318	GSS04-2M □□□063C42	802
	12	2.3	15	2.2	22	2.2	158	113.667	GSS05-2M □□□063C42	802
	11	1.1	13	1.1	20	1.1	159	125.682	GSS04-2M □□□063C42	802
	11	1.9	13	1.8	20	1.6	180	125.476	GSS05-3M □□□063C42	810
	11	2.0	13	2.0	19	2.0	174	128.333	GSS05-2M □□□063C42	802
	9.9	1.9	12	1.9	18	1.8	190	137.950	GSS05-2M □□□063C42	802
	9.9	3.2	12	3.2	18	3.2	182	137.950	GSS06-2M □□□063C42	802
	9.8	1.0	12	1.0	18	1.0	180	139.500	GSS04-2M □□□063C42	802
	8.9	1.6	11	1.6	16	1.4	218	153.708	GSS05-3M □□□063C42	810
	8.8	1.7	11	1.7	16	1.6	210	155.750	GSS05-2M □□□063C42	802
	8.8	3.2	11	3.2	16	3.2	202	155.750	GSS06-2M □□□063C42	802
	8.7	0.9	11	0.9	16	0.9	196	157.500	GSS04-2M □□□063C42	802
	7.9	2.6	9.6	2.6	14	2.6	228	174.375	GSS06-2M □□□063C42	802
	7.8	1.4	9.5	1.4	14	1.4	240	176.313	GSS05-2M □□□063C42	802

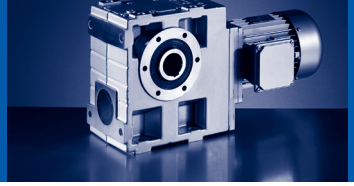

50 Hz: P_N=0.25 kW
60 Hz: P_N=0.31 kW
87 Hz: P_N=0.45 kW

n_N	1370 r/min		1670 r/min		2480 r/min		M_2 [Nm]	i		
f_N	50 Hz		60 Hz		87 Hz					
P_N	0.25 kW		0.31 kW		0.45 kW					
	n_2 [r/min]	c	n_2 [r/min]	c	n_2 [r/min]	c				
	7.8	3.3	9.5	3.2	14	3.1	215	175.000	GSS06-3M □□□063C42	810
	7.1	1.3	8.6	1.3	13	1.2	269	193.233	GSS05-3M □□□063C42	810
	7	2.6	8.5	2.6	13	2.6	254	196.875	GSS06-2M □□□063C42	802
	7	2.9	8.6	2.9	13	2.8	241	194.857	GSS06-3M □□□063C42	810
	6.9	1.4	8.4	1.3	13	1.3	265	199.063	GSS05-2M □□□063C42	802
	6.2	1.2	7.5	1.2	11	1.2	289	222.133	GSS05-3M □□□063C42	810
	6.2	2.6	7.6	2.6	11	2.5	269	220.000	GSS06-3M □□□063C42	810
	5.7	2.4	7	2.4	10	2.3	294	238.700	GSS06-3M □□□063C42	810
	5.5	1.1	6.7	1.1	9.9	1.1	326	250.952	GSS05-3M □□□063C42	810
	5.1	2.2	6.2	2.1	9.2	2.1	327	269.500	GSS06-3M □□□063C42	810
	4.8	1.0	5.9	1.0	8.8	1.0	359	283.333	GSS05-3M □□□063C42	810
	4.5	0.9	5.4	0.9	8.1	0.9	390	307.417	GSS05-3M □□□063C42	810
	4.4	1.9	5.4	1.9	8	1.8	378	310.689	GSS06-3M □□□063C42	810
	4.3	3.0	5.2	3.0	7.7	2.9	402	321.673	GSS07-3M □□□063C42	810
	4	0.8	4.8	0.8			429	347.083	GSS05-3M □□□063C42	810
	3.9	1.7	4.8	1.7	7.1	1.6	418	350.778	GSS06-3M □□□063C42	810
	3.8	2.7	4.6	2.7	6.8	2.6	447	363.179	GSS07-3M □□□063C42	810
	3.5	1.6	4.3	1.5	6.4	1.5	462	386.467	GSS06-3M □□□063C42	810
	3.5	2.5	4.2	2.5	6.3	2.4	488	394.245	GSS07-3M □□□063C42	810
	3.1	1.4	3.8	1.4	5.7	1.3	510	436.333	GSS06-3M □□□063C42	810
	3.1	2.3	3.8	2.2	5.6	2.2	542	445.116	GSS07-3M □□□063C42	810
	2.8	1.2	3.4	1.2	5	1.2	582	497.722	GSS06-3M □□□063C42	810
	2.8	2.1	3.4	2.0	5.1	2.0	599	490.403	GSS07-3M □□□063C42	810
	2.5	1.9	3	1.8	4.5	1.8	664	553.681	GSS07-3M □□□063C42	810
	2.4	1.1	3	1.1	4.4	1.1	641	561.944	GSS06-3M □□□063C42	810
	2.2	1.0	2.7	1.0	3.9	0.9	721	630.803	GSS06-3M □□□063C42	810
	2.2	1.6	2.6	1.6	3.9	1.6	760	634.639	GSS07-3M □□□063C42	810
	1.9	0.9	2.3	0.9	3.5	0.9	796	712.197	GSS06-3M □□□063C42	810
	1.9	1.5	2.3	1.5	3.5	1.4	842	716.528	GSS07-3M □□□063C42	810
	1.6	1.3	2	1.3	3	1.2	977	833.556	GSS07-3M □□□063C42	810
	1.5	1.2	1.8	1.1	2.6	1.1	1081	941.111	GSS07-3M □□□063C42	810
	1.4	1.1	1.7	1.1	2.5	1.0	1168	1011.633	GSS07-3M □□□063C42	810
	1.2	1.0	1.5	1.0	2.2	0.9	1292	1142.167	GSS07-3M □□□063C42	810
	1.1	0.9	1.4	0.9	2	0.9	1399	1227.755	GSS07-3M □□□063C42	810
	1	0.8					1546	1386.175	GSS07-3M □□□063C42	810

50 Hz: P_N=0.25 kW
60 Hz: P_N=0.3 kW

n_N	930 r/min		1130 r/min				M_2 [Nm]	i		
f_N	50 Hz		60 Hz							
P_N	0.25 kW		0.3 kW							
	n_2 [r/min]	c	n_2 [r/min]	c						
	165	3.9	200	3.9			13	5.639	GSS04-2M □□□071C33	802
	120	3.9	146	3.9			18	7.733	GSS04-2M □□□071C33	802
	103	3.9	125	3.9			20	9.042	GSS04-2M □□□071C33	802
	94	4.4	114	4.4			22	9.897	GSS04-2M □□□071C33	802
	86	3.9	104	3.9			25	10.827	GSS05-2M □□□071C33	802
	75	3.9	91	3.9			27	12.400	GSS04-2M □□□071C33	802
	67	4.1	82	4.1			31	13.810	GSS04-2M □□□071C33	802
	59	4.4	71	4.4			34	15.869	GSS04-2M □□□071C33	802
	54	3.9	65	3.9			38	17.360	GSS05-2M □□□071C33	802
	46	3.9	55	3.9			40	20.417	GSS04-2M □□□071C33	802
	42	3.7	51	3.7			47	22.143	GSS04-2M □□□071C33	802
	38	3.6	46	3.5			49	24.800	GSS04-2M □□□071C33	802
	34	3.0	42	3.0			58	27.125	GSS04-2M □□□071C33	802
	29	2.8	36	2.8			63	31.738	GSS04-2M □□□071C33	802
	27	2.4	33	2.4			73	34.100	GSS04-2M □□□071C33	802
	24	2.4	29	2.3			75	39.200	GSS04-2M □□□071C33	802
	21	1.9	26	1.9			93	43.917	GSS04-2M □□□071C33	802
	21	3.1	26	3.1			96	43.917	GSS05-2M □□□071C33	802
	19	1.9	23	1.8			95	50.000	GSS04-2M □□□071C33	802
	17	1.7	21	1.7			106	54.250	GSS04-2M □□□071C33	802
	15	1.5	18	1.5			116	61.250	GSS04-2M □□□071C33	802
	14	1.4	17	1.3			131	68.200	GSS04-2M □□□071C33	802
	13	2.5	16	2.4			144	70.611	GSS05-2M □□□071C33	802
	12	1.3	15	1.2			144	77.000	GSS04-2M □□□071C33	802
	12	2.2	14	2.2			160	79.722	GSS05-2M □□□071C33	802
	11	1.1	13	1.1			167	87.833	GSS04-2M □□□071C33	802
	11	2.0	13	2.0			178	87.833	GSS05-2M □□□071C33	802
	9.4	1.0	11	1.0			182	99.167	GSS04-2M □□□071C33	802
	9.4	1.8	11	1.8			197	99.167	GSS05-2M □□□071C33	802
	8.4	0.9	10	0.9			209	111.318	GSS04-2M □□□071C33	802
	8.2	1.6	9.9	1.6			228	113.667	GSS05-2M □□□071C33	802
	8.2	3.1	9.9	3.1			218	113.667	GSS06-2M □□□071C33	802
	7.4	1.3	9	1.3			258	125.476	GSS05-3M □□□071C33	810
	7.4	3.0	8.9	3.0			230	126.531	GSS06-3M □□□071C33	810
	7.3	1.4	8.8	1.4			251	128.333	GSS05-2M □□□071C33	802
	7.3	2.9	8.8	2.9			243	128.333	GSS06-2M □□□071C33	802
	6.7	1.3	8.2	1.3			273	137.950	GSS05-2M □□□071C33	802
	6.7	2.7	8.2	2.7			263	137.950	GSS06-2M □□□071C33	802
	6.5	2.7	7.9	2.7			257	142.857	GSS06-3M □□□071C33	810
	6.1	1.1	7.4	1.1			311	153.708	GSS05-3M □□□071C33	810
	6	1.2	7.3	1.2			300	155.750	GSS05-2M □□□071C33	802

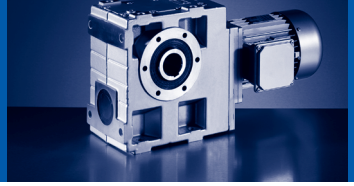

50 Hz: P_N=0.25 kW
60 Hz: P_N=0.3 kW

n_N	930 r/min		1130 r/min				M_2 [Nm]	i		
f_N	50 Hz		60 Hz							
P_N	0.25 kW		0.3 kW							
	n_2 [r/min]	c	n_2 [r/min]	c						
	6	2.4	7.3	2.4			293	155.750	GSS06-2M □□□071C33	802
	6	2.5	7.3	2.5			281	155.000	GSS06-3M □□□071C33	810
	5.3	1.1	6.4	1.0			340	176.313	GSS05-2M □□□071C33	802
	5.3	2.2	6.5	2.1			330	174.375	GSS06-2M □□□071C33	802
	5.3	2.3	6.5	2.2			312	175.000	GSS06-3M □□□071C33	810
	4.8	0.9	5.9	0.9			384	193.233	GSS05-3M □□□071C33	810
	4.8	2.0	5.8	2.0			349	194.857	GSS06-3M □□□071C33	810
	4.7	1.0	5.7	0.9			373	199.063	GSS05-2M □□□071C33	802
	4.7	1.9	5.7	1.9			366	196.875	GSS06-2M □□□071C33	802
	4.2	0.9	5.1	0.9			405	222.133	GSS05-3M □□□071C33	810
	4.2	1.8	5.1	1.8			387	220.000	GSS06-3M □□□071C33	810
	4.1	2.9	5	2.9			414	227.778	GSS07-3M □□□071C33	810
	3.9	1.7	4.7	1.7			422	238.700	GSS06-3M □□□071C33	810
	3.8	2.7	4.6	2.7			452	247.139	GSS07-3M □□□071C33	810
	3.5	1.5	4.2	1.5			466	269.500	GSS06-3M □□□071C33	810
	3.3	2.4	4.1	2.4			502	279.028	GSS07-3M □□□071C33	810
	3	1.3	3.6	1.3			537	310.689	GSS06-3M □□□071C33	810
	2.9	2.1	3.5	2.1			579	321.673	GSS07-3M □□□071C33	810
	2.7	1.2	3.2	1.2			592	350.778	GSS06-3M □□□071C33	810
	2.6	1.9	3.1	1.9			642	363.179	GSS07-3M □□□071C33	810
	2.4	1.1	2.9	1.1			654	386.467	GSS06-3M □□□071C33	810
	2.4	1.8	2.9	1.7			699	394.245	GSS07-3M □□□071C33	810
	2.1	1.0	2.6	1.0			722	436.333	GSS06-3M □□□071C33	810
	2.1	1.6	2.5	1.6			774	445.116	GSS07-3M □□□071C33	810
	1.9	0.9	2.3	0.9			824	497.722	GSS06-3M □□□071C33	810
	1.9	1.5	2.3	1.4			855	490.403	GSS07-3M □□□071C33	810
	1.7	1.3	2	1.3			946	553.681	GSS07-3M □□□071C33	810
	1.5	1.2	1.8	1.1			1084	634.639	GSS07-3M □□□071C33	810
	1.3	1.0	1.6	1.0			1199	716.528	GSS07-3M □□□071C33	810
	1.1	0.9	1.4	0.9			1396	833.556	GSS07-3M □□□071C33	810
	1	0.8					1544	941.111	GSS07-3M □□□071C33	810

50 Hz: P_N=0.37 kW
60 Hz: P_N=0.45 kW

n_N	2720 r/min		3320 r/min				M_2 [Nm]	i		
f_N	50 Hz		60 Hz							
P_N	0.37 kW		0.45 kW							
	n_2 [r/min]	c	n_2 [r/min]	c						
	133	5.6	163	5.2			20	20.417	GSS04-2M □□□071C11	802
	110	5.1	134	4.7			25	24.800	GSS04-2M □□□071C11	802
	100	5.6	122	5.3			29	27.125	GSS04-2M □□□071C11	802
	86	4.3	105	4.0			32	31.738	GSS04-2M □□□071C11	802
	80	4.6	97	4.5			37	34.100	GSS04-2M □□□071C11	802
	69	3.7	85	3.5			39	39.200	GSS04-2M □□□071C11	802
	62	3.6	76	3.6			48	43.917	GSS04-2M □□□071C11	802
	54	3.2	66	3.0			50	50.000	GSS04-2M □□□071C11	802
	50	3.1	61	2.9			56	54.250	GSS04-2M □□□071C11	802
	44	2.8	54	2.6			61	61.250	GSS04-2M □□□071C11	802
	40	2.5	49	2.5			70	68.200	GSS04-2M □□□071C11	802
	35	2.3	43	2.3			77	77.000	GSS04-2M □□□071C11	802
	31	2.0	38	2.0			89	87.833	GSS04-2M □□□071C11	802
	27	1.8	34	1.8			98	99.167	GSS04-2M □□□071C11	802
	24	1.6	30	1.6			113	111.318	GSS04-2M □□□071C11	802
	24	3.0	29	2.9			119	113.667	GSS05-2M □□□071C11	802
	22	1.5	26	1.4			124	125.682	GSS04-2M □□□071C11	802
	22	2.0	27	1.9			139	125.476	GSS05-3M □□□071C11	810
	21	2.7	26	2.7			132	128.333	GSS05-2M □□□071C11	802
	20	1.3	24	1.3			140	139.500	GSS04-2M □□□071C11	802
	20	2.4	24	2.4			145	137.950	GSS05-2M □□□071C11	802
	18	1.8	22	1.7			169	153.708	GSS05-3M □□□071C11	810
	18	2.2	21	2.2			162	155.750	GSS05-2M □□□071C11	802
	17	1.2	21	1.2			153	157.500	GSS04-2M □□□071C11	802
	15	1.9	19	1.9			185	176.313	GSS05-2M □□□071C11	802
	14	1.5	17	1.4			211	193.233	GSS05-3M □□□071C11	810
	14	1.7	17	1.7			206	199.063	GSS05-2M □□□071C11	802
	12	1.6	15	1.6			225	222.133	GSS05-3M □□□071C11	810
	11	1.4	13	1.4			257	250.952	GSS05-3M □□□071C11	810
	11	3.1	14	3.1			227	238.700	GSS06-3M □□□071C11	810
	10	2.8	12	2.8			252	269.500	GSS06-3M □□□071C11	810
	9.6	1.3	12	1.3			283	283.333	GSS05-3M □□□071C11	810
	8.9	1.2	11	1.1			311	307.417	GSS05-3M □□□071C11	810
	8.8	2.4	11	2.4			292	310.689	GSS06-3M □□□071C11	810
	7.8	1.1	9.6	1.0			343	347.083	GSS05-3M □□□071C11	810
	7.8	2.2	9.5	2.2			326	350.778	GSS06-3M □□□071C11	810
	7	0.9	8.6	0.9			386	386.467	GSS05-3M □□□071C11	810
	7	2.0	8.6	2.0			361	386.467	GSS06-3M □□□071C11	810
	6.9	3.2	8.4	3.2			376	394.245	GSS07-3M □□□071C11	810
	6.2	0.9	7.6	0.8			426	436.333	GSS05-3M □□□071C11	810
	6.2	1.8	7.6	1.8			403	436.333	GSS06-3M □□□071C11	810

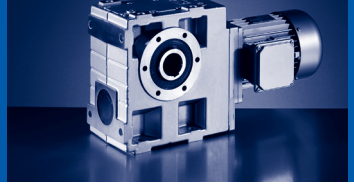

50 Hz: P_N=0.37 kW
60 Hz: P_N=0.45 kW

n_N	2720 r/min		3320 r/min				M_2 [Nm]	i		
f_N	50 Hz		60 Hz							
P_N	0.37 kW		0.45 kW							
	n_2 [r/min]	c	n_2 [r/min]	c						
	6.1	2.9	7.5	2.9			420	445.116	GSS07-3M □□□071C11	810
	5.6	2.6	6.8	2.6			466	490.403	GSS07-3M □□□071C11	810
	5.5	1.6	6.7	1.5			461	497.722	GSS06-3M □□□071C11	810
	4.9	2.4	6	2.3			520	553.681	GSS07-3M □□□071C11	810
	4.8	1.4	5.9	1.4			512	561.944	GSS06-3M □□□071C11	810
	4.3	1.3	5.3	1.2			576	630.803	GSS06-3M □□□071C11	810
	4.3	2.1	5.2	2.0			599	634.639	GSS07-3M □□□071C11	810
	3.8	1.1	4.7	1.1			636	712.197	GSS06-3M □□□071C11	810
	3.8	1.9	4.6	1.8			666	716.528	GSS07-3M □□□071C11	810
	3.3	1.0	4.1	1.0			729	816.333	GSS06-3M □□□071C11	810
	3.3	1.6	4	1.6			775	833.556	GSS07-3M □□□071C11	810
	3	0.9	3.6	0.9			804	921.667	GSS06-3M □□□071C11	810
	2.9	1.5	3.5	1.4			860	941.111	GSS07-3M □□□071C11	810
	2.7	0.8					894	1023.000	GSS06-3M □□□071C11	810
	2.7	1.3	3.3	1.3			927	1011.633	GSS07-3M □□□071C11	810
	2.4	1.2	2.9	1.2			1027	1142.167	GSS07-3M □□□071C11	810
	2.2	1.1	2.7	1.1			1108	1227.755	GSS07-3M □□□071C11	810
	2	1.0	2.4	1.0			1226	1386.175	GSS07-3M □□□071C11	810
	1.7	0.9	2.1	0.9			1386	1569.181	GSS07-3M □□□071C11	810
	1.5	0.8	1.9	0.8			1534	1771.656	GSS07-3M □□□071C11	810

50 Hz: P_N=0.37 kW
60 Hz: P_N=0.45 kW
87 Hz: P_N=0.66 kW

n_N	1410 r/min		1710 r/min		2520 r/min		M_2 [Nm]	i		
f_N	50 Hz		60 Hz		87 Hz					
P_N	0.37 kW		0.45 kW		0.66 kW					
	n_2 [r/min]	c	n_2 [r/min]	c	n_2 [r/min]	c				
	250	4.0	303	4.0	447	4.0	12	5.639	GSS04-2M □□□071C32	802
	182	4.0	221	4.0	326	4.0	17	7.733	GSS04-2M □□□071C32	802
	156	4.0	189	4.0	279	4.0	19	9.042	GSS04-2M □□□071C32	802
	143	4.5	173	4.5	255	4.5	22	9.897	GSS04-2M □□□071C32	802
	130	4.0	158	4.0	233	4.0	24	10.827	GSS05-2M □□□071C32	802
	114	4.0	138	4.0	203	4.0	26	12.400	GSS04-2M □□□071C32	802
	102	4.2	124	4.2	183	4.2	31	13.810	GSS04-2M □□□071C32	802
	89	4.5	108	4.5	159	4.3	34	15.869	GSS04-2M □□□071C32	802
	81	4.0	99	4.0	145	4.0	37	17.360	GSS05-2M □□□071C32	802
	69	3.8	84	3.5	123	3.0	39	20.417	GSS04-2M □□□071C32	802
	64	3.7	77	3.7	114	3.5	47	22.143	GSS04-2M □□□071C32	802
	57	3.4	69	3.2	102	2.8	49	24.800	GSS04-2M □□□071C32	802
	52	3.1	63	3.1	93	3.0	57	27.125	GSS04-2M □□□071C32	802
	44	2.8	54	2.7	79	2.4	62	31.738	GSS04-2M □□□071C32	802
	41	2.5	50	2.4	74	2.4	72	34.100	GSS04-2M □□□071C32	802
	36	2.4	44	2.3	64	2.0	75	39.200	GSS04-2M □□□071C32	802
	32	1.9	39	1.9	57	1.9	93	43.917	GSS04-2M □□□071C32	802
	32	3.2	39	3.2	57	3.2	95	43.917	GSS05-2M □□□071C32	802
	28	1.9	34	1.8	50	1.7	96	50.000	GSS04-2M □□□071C32	802
	26	1.7	32	1.7	47	1.7	106	54.250	GSS04-2M □□□071C32	802
	23	1.5	28	1.5	41	1.5	116	61.250	GSS04-2M □□□071C32	802
	21	1.4	25	1.3	37	1.3	132	68.200	GSS04-2M □□□071C32	802
	20	2.5	24	2.5	36	2.3	143	70.611	GSS05-2M □□□071C32	802
	18	1.2	22	1.2	33	1.2	145	77.000	GSS04-2M □□□071C32	802
	18	2.2	21	2.2	32	2.1	159	79.722	GSS05-2M □□□071C32	802
	16	1.1	20	1.1	29	1.0	168	87.833	GSS04-2M □□□071C32	802
	16	2.0	20	2.0	29	2.0	178	87.833	GSS05-2M □□□071C32	802
	14	1.0	17	1.0	25	1.0	184	99.167	GSS04-2M □□□071C32	802
	14	1.8	17	1.8	25	1.8	198	99.167	GSS05-2M □□□071C32	802
	13	0.9	15	0.9	23	0.8	210	111.318	GSS04-2M □□□071C32	802
	12	1.6	15	1.6	22	1.5	229	113.667	GSS05-2M □□□071C32	802
	12	3.2	15	3.2	22	3.1	218	113.667	GSS06-2M □□□071C32	802
	11	1.3	14	1.3	20	1.1	261	125.476	GSS05-3M □□□071C32	810
	11	1.4	13	1.4	20	1.4	253	128.333	GSS05-2M □□□071C32	802
	11	2.9	13	2.9	20	2.8	244	128.333	GSS06-2M □□□071C32	802
	11	3.0	14	3.0	20	2.9	231	126.531	GSS06-3M □□□071C32	810
	10	1.3	12	1.3	18	1.3	275	137.950	GSS05-2M □□□071C32	802
	10	2.7	12	2.7	18	2.6	264	137.950	GSS06-2M □□□071C32	802
	9.9	2.7	12	2.7	18	2.7	257	142.857	GSS06-3M □□□071C32	810
	9.2	1.1	11	1.1	16	1.0	315	153.708	GSS05-3M □□□071C32	810
	9.1	1.2	11	1.2	16	1.1	303	155.750	GSS05-2M □□□071C32	802

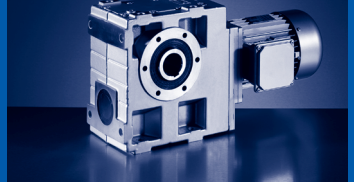

50 Hz: P_N=0.37 kW
60 Hz: P_N=0.45 kW
87 Hz: P_N=0.66 kW

n_N	1410 r/min		1710 r/min		2520 r/min		M_2 [Nm]	i		
f_N	50 Hz		60 Hz		87 Hz					
P_N	0.37 kW		0.45 kW		0.66 kW					
	n_2 [r/min]	c	n_2 [r/min]	c	n_2 [r/min]	c				
	9.1	2.4	11	2.4	16	2.3	294	155.750	GSS06-2M □□□071C32	802
	9.1	2.5	11	2.5	16	2.4	281	155.000	GSS06-3M □□□071C32	810
	8.1	2.2	9.8	2.1	15	2.1	330	174.375	GSS06-2M □□□071C32	802
	8.1	2.3	9.8	2.2	14	2.2	313	175.000	GSS06-3M □□□071C32	810
	8	1.0	9.7	1.0	14	1.0	347	176.313	GSS05-2M □□□071C32	802
	7.3	0.9	8.9	0.9	13	0.8	389	193.233	GSS05-3M □□□071C32	810
	7.2	1.9	8.7	1.9	13	1.9	368	196.875	GSS06-2M □□□071C32	802
	7.2	2.0	8.8	2.0	13	2.0	351	194.857	GSS06-3M □□□071C32	810
	7.1	0.9	8.6	0.9	13	0.9	383	199.063	GSS05-2M □□□071C32	802
	6.4	0.9	7.7	0.9	11	0.8	418	222.133	GSS05-3M □□□071C32	810
	6.4	1.8	7.8	1.8	12	1.8	391	220.000	GSS06-3M □□□071C32	810
	6.2	3.0	7.5	2.9	11	2.9	414	227.778	GSS07-3M □□□071C32	810
	5.9	1.7	7.2	1.7	11	1.6	427	238.700	GSS06-3M □□□071C32	810
	5.7	2.7	6.9	2.7	10	2.6	453	247.139	GSS07-3M □□□071C32	810
	5.2	1.5	6.4	1.5	9.4	1.5	474	269.500	GSS06-3M □□□071C32	810
	5.1	2.4	6.1	2.4	9	2.4	504	279.028	GSS07-3M □□□071C32	810
	4.5	1.3	5.5	1.3	8.1	1.3	547	310.689	GSS06-3M □□□071C32	810
	4.4	2.1	5.3	2.1	7.8	2.0	585	321.673	GSS07-3M □□□071C32	810
	4	1.2	4.9	1.2	7.2	1.1	605	350.778	GSS06-3M □□□071C32	810
	3.9	1.9	4.7	1.9	6.9	1.8	650	363.179	GSS07-3M □□□071C32	810
	3.7	1.1	4.4	1.1	6.5	1.0	668	386.467	GSS06-3M □□□071C32	810
	3.6	1.7	4.3	1.7	6.4	1.7	709	394.245	GSS07-3M □□□071C32	810
	3.2	1.0	3.9	1.0	5.8	0.9	737	436.333	GSS06-3M □□□071C32	810
	3.2	1.6	3.8	1.6	5.7	1.5	787	445.116	GSS07-3M □□□071C32	810
	2.9	1.4	3.5	1.4	5.1	1.4	869	490.403	GSS07-3M □□□071C32	810
	2.8	0.9	3.4	0.8	5.1	0.8	841	497.722	GSS06-3M □□□071C32	810
	2.6	1.3	3.1	1.3	4.6	1.2	963	553.681	GSS07-3M □□□071C32	810
	2.2	1.1	2.7	1.1	4	1.1	1101	634.639	GSS07-3M □□□071C32	810
	2	1.0	2.4	1.0	3.5	1.0	1218	716.528	GSS07-3M □□□071C32	810
	1.7	0.9	2.1	0.9	3	0.8	1413	833.556	GSS07-3M □□□071C32	810
	1.5	0.8					1563	941.111	GSS07-3M □□□071C32	810

50 Hz: P_N=0.37 kW
60 Hz: P_N=0.45 kW

n_N	950 r/min		1150 r/min				M_2 [Nm]	i		
f_N	50 Hz		60 Hz							
P_N	0.37 kW		0.45 kW							
	n_2 [r/min]	c	n_2 [r/min]	c						
	169	5.7	204	5.7			18	5.639	GSS04-2M □□□080C13	802
	123	5.7	149	5.7			25	7.733	GSS04-2M □□□080C13	802
	105	5.7	127	5.6			28	9.042	GSS04-2M □□□080C13	802
	96	4.8	116	4.8			32	9.897	GSS04-2M □□□080C13	802
	88	4.4	106	4.4			36	10.827	GSS04-2M □□□080C13	802
	77	4.5	93	4.5			39	12.400	GSS04-2M □□□080C13	802
	69	3.5	83	3.5			46	13.810	GSS04-2M □□□080C13	802
	60	3.5	73	3.5			50	15.869	GSS04-2M □□□080C13	802
	55	3.2	66	3.2			54	17.360	GSS04-2M □□□080C13	802
	47	3.0	56	2.8			58	20.417	GSS04-2M □□□080C13	802
	43	2.6	52	2.5			69	22.143	GSS04-2M □□□080C13	802
	38	2.5	46	2.4			72	24.800	GSS04-2M □□□080C13	802
	35	2.1	42	2.1			85	27.125	GSS04-2M □□□080C13	802
	30	1.9	36	1.9			92	31.738	GSS04-2M □□□080C13	802
	28	1.7	34	1.7			106	34.100	GSS04-2M □□□080C13	802
	27	3.1	33	3.1			113	35.306	GSS05-2M □□□080C13	802
	24	1.6	29	1.6			110	39.200	GSS04-2M □□□080C13	802
	24	3.1	29	3.0			115	39.200	GSS05-2M □□□080C13	802
	22	1.3	26	1.3			135	43.917	GSS04-2M □□□080C13	802
	22	2.5	26	2.5			140	43.917	GSS05-2M □□□080C13	802
	19	1.3	23	1.3			139	50.000	GSS04-2M □□□080C13	802
	19	2.4	23	2.4			148	50.000	GSS05-2M □□□080C13	802
	18	1.2	21	1.2			154	54.250	GSS04-2M □□□080C13	802
	18	2.2	21	2.2			163	54.250	GSS05-2M □□□080C13	802
	16	1.1	19	1.1			169	61.250	GSS04-2M □□□080C13	802
	16	2.0	19	2.0			181	61.250	GSS05-2M □□□080C13	802
	14	0.9	17	0.9			191	68.200	GSS04-2M □□□080C13	802
	14	1.7	16	1.7			211	70.611	GSS05-2M □□□080C13	802
	12	0.9	15	0.9			209	77.000	GSS04-2M □□□080C13	802
	12	1.5	14	1.5			233	79.722	GSS05-2M □□□080C13	802
	12	3.1	14	3.1			225	79.722	GSS06-2M □□□080C13	802
	11	1.4	13	1.4			260	87.833	GSS05-2M □□□080C13	802
	11	2.8	13	2.8			249	87.833	GSS06-2M □□□080C13	802
	9.6	1.3	12	1.2			287	99.167	GSS05-2M □□□080C13	802
	9.6	2.5	12	2.5			278	99.167	GSS06-2M □□□080C13	802
	8.4	1.1	10	1.1			332	113.667	GSS05-2M □□□080C13	802
	8.4	2.2	10	2.2			319	113.667	GSS06-2M □□□080C13	802
	7.6	0.9	9.2	0.9			375	125.476	GSS05-3M □□□080C13	810
	7.5	2.1	9.1	2.1			338	126.531	GSS06-3M □□□080C13	810
	7.4	1.0	9	1.0			366	128.333	GSS05-2M □□□080C13	802
	7.4	2.0	9	2.0			356	128.333	GSS06-2M □□□080C13	802

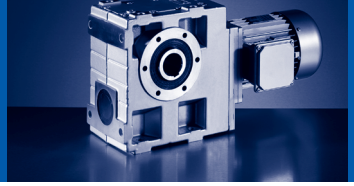

50 Hz: P_N=0.37 kW
60 Hz: P_N=0.45 kW

n_N	950 r/min		1150 r/min				M_2 [Nm]	i		
f_N	50 Hz		60 Hz							
P_N	0.37 kW		0.45 kW							
	n_2 [r/min]	c	n_2 [r/min]	c						
	6.9	0.9	8.3	0.9			397	137.950	GSS05-2M □□□080C13	802
	6.9	1.9	8.3	1.8			386	137.950	GSS06-2M □□□080C13	802
	6.9	3.1	8.3	3.1			394	137.950	GSS07-2M □□□080C13	802
	6.7	1.9	8.1	1.9			377	142.857	GSS06-3M □□□080C13	810
	6.7	3.2	8.1	3.1			386	142.857	GSS07-3M □□□080C13	810
	6.1	0.8	7.4	0.8			437	155.750	GSS05-2M □□□080C13	802
	6.1	1.7	7.4	1.7			429	155.750	GSS06-2M □□□080C13	802
	6.1	1.7	7.4	1.7			412	155.000	GSS06-3M □□□080C13	810
	6.1	2.8	7.4	2.7			440	155.750	GSS07-2M □□□080C13	802
	6.1	2.9	7.4	2.9			422	155.000	GSS07-3M □□□080C13	810
	5.5	1.5	6.6	1.5			482	174.375	GSS06-2M □□□080C13	802
	5.5	2.5	6.6	2.5			497	174.375	GSS07-2M □□□080C13	802
	5.4	1.6	6.6	1.5			457	175.000	GSS06-3M □□□080C13	810
	5.4	2.6	6.6	2.6			470	175.000	GSS07-3M □□□080C13	810
	4.9	1.4	5.9	1.4			511	194.857	GSS06-3M □□□080C13	810
	4.8	1.3	5.8	1.3			534	196.875	GSS06-2M □□□080C13	802
	4.8	2.2	5.8	2.2			553	196.875	GSS07-2M □□□080C13	802
	4.7	2.3	5.7	2.2			546	201.746	GSS07-3M □□□080C13	810
	4.3	1.3	5.2	1.3			565	220.000	GSS06-3M □□□080C13	810
	4.2	2.0	5.1	2.0			607	227.778	GSS07-3M □□□080C13	810
	4	1.2	4.8	1.2			616	238.700	GSS06-3M □□□080C13	810
	3.8	1.9	4.7	1.8			662	247.139	GSS07-3M □□□080C13	810
	3.5	1.1	4.3	1.0			679	269.500	GSS06-3M □□□080C13	810
	3.4	1.7	4.1	1.7			735	279.028	GSS07-3M □□□080C13	810
	3.1	0.9	3.7	0.9			782	310.689	GSS06-3M □□□080C13	810
	3	1.5	3.6	1.4			846	321.673	GSS07-3M □□□080C13	810
	2.7	0.8	3.3	0.8			862	350.778	GSS06-3M □□□080C13	810
	2.6	1.3	3.2	1.3			938	363.179	GSS07-3M □□□080C13	810
	2.4	1.2	2.9	1.2			1020	394.245	GSS07-3M □□□080C13	810
	2.1	1.1	2.6	1.1			1130	445.116	GSS07-3M □□□080C13	810
	1.9	1.0	2.4	1.0			1246	490.403	GSS07-3M □□□080C13	810
	1.7	0.9	2.1	0.9			1379	553.681	GSS07-3M □□□080C13	810

50 Hz: P_N=0.55 kW
60 Hz: P_N=0.68 kW

n_N	2630 r/min		3230 r/min				M_2 [Nm]	i		
f_N	50 Hz		60 Hz							
P_N	0.55 kW		0.68 kW							
	n_2 [r/min]	c	n_2 [r/min]	c						
	466	5.0	573	5.0			10	5.639	GSS04-2M □□□071C31	802
	340	5.0	418	5.0			13	7.733	GSS04-2M □□□071C31	802
	291	5.0	357	5.0			15	9.042	GSS04-2M □□□071C31	802
	266	5.7	326	5.7			17	9.897	GSS04-2M □□□071C31	802
	243	5.0	298	5.0			19	10.827	GSS05-2M □□□071C31	802
	212	5.0	261	5.0			21	12.400	GSS04-2M □□□071C31	802
	190	5.2	234	5.2			24	13.810	GSS04-2M □□□071C31	802
	166	5.2	204	4.9			27	15.869	GSS04-2M □□□071C31	802
	152	4.9	186	4.6			29	17.360	GSS04-2M □□□071C31	802
	129	3.6	158	3.4			32	20.417	GSS04-2M □□□071C31	802
	119	4.2	146	3.9			38	22.143	GSS04-2M □□□071C31	802
	106	3.3	130	3.1			40	24.800	GSS04-2M □□□071C31	802
	97	3.6	119	3.4			46	27.125	GSS04-2M □□□071C31	802
	83	2.8	102	2.6			51	31.738	GSS04-2M □□□071C31	802
	77	3.0	95	2.9			58	34.100	GSS04-2M □□□071C31	802
	67	2.4	82	2.2			61	39.200	GSS04-2M □□□071C31	802
	60	2.4	74	2.4			75	43.917	GSS04-2M □□□071C31	802
	53	2.1	65	1.9			78	50.000	GSS04-2M □□□071C31	802
	49	2.0	60	1.9			87	54.250	GSS04-2M □□□071C31	802
	43	1.8	53	1.7			95	61.250	GSS04-2M □□□071C31	802
	39	1.7	47	1.6			108	68.200	GSS04-2M □□□071C31	802
	37	2.7	46	2.5			114	70.611	GSS05-2M □□□071C31	802
	34	1.5	42	1.5			119	77.000	GSS04-2M □□□071C31	802
	33	2.5	41	2.3			127	79.722	GSS05-2M □□□071C31	802
	30	1.3	37	1.3			139	87.833	GSS04-2M □□□071C31	802
	30	2.4	37	2.2			142	87.833	GSS05-2M □□□071C31	802
	27	1.2	33	1.2			152	99.167	GSS04-2M □□□071C31	802
	27	2.2	33	2.0			158	99.167	GSS05-2M □□□071C31	802
	24	1.0	29	1.0			175	111.318	GSS04-2M □□□071C31	802
	23	1.9	28	1.9			185	113.667	GSS05-2M □□□071C31	802
	21	0.9	26	0.9			191	125.682	GSS04-2M □□□071C31	802
	21	1.3	26	1.2			216	125.476	GSS05-3M □□□071C31	810
	21	1.7	25	1.7			206	128.333	GSS05-2M □□□071C31	802
	19	0.8	23	0.8			216	139.500	GSS04-2M □□□071C31	802
	19	1.6	23	1.6			225	137.950	GSS05-2M □□□071C31	802
	19	3.2	23	3.2			217	137.950	GSS06-2M □□□071C31	802
	17	1.2	21	1.1			262	153.708	GSS05-3M □□□071C31	810
	17	1.4	21	1.4			251	155.750	GSS05-2M □□□071C31	802
	17	2.9	21	2.9			243	155.750	GSS06-2M □□□071C31	802
	17	3.0	21	3.0			232	155.000	GSS06-3M □□□071C31	810
	15	1.3	18	1.2			287	176.313	GSS05-2M □□□071C31	802

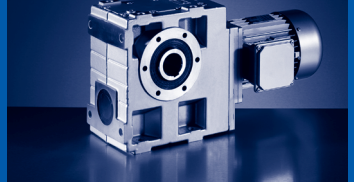

50 Hz: P_N=0.55 kW
60 Hz: P_N=0.68 kW

n_N	2630 r/min		3230 r/min				M_2 [Nm]	i		
f_N	50 Hz		60 Hz							
P_N	0.55 kW		0.68 kW							
	n_2 [r/min]	c	n_2 [r/min]	c						
	15	2.6	19	2.6			273	174.375	GSS06-2M □□□071C31	802
	15	2.7	19	2.7			259	175.000	GSS06-3M □□□071C31	810
	14	1.0	17	0.9			327	193.233	GSS05-3M □□□071C31	810
	14	2.4	17	2.4			290	194.857	GSS06-3M □□□071C31	810
	13	1.1	16	1.1			319	199.063	GSS05-2M □□□071C31	802
	13	2.3	16	2.3			305	196.875	GSS06-2M □□□071C31	802
	12	1.0	15	1.0			348	222.133	GSS05-3M □□□071C31	810
	12	2.2	15	2.2			324	220.000	GSS06-3M □□□071C31	810
	11	0.9	13	0.9			397	250.952	GSS05-3M □□□071C31	810
	11	2.0	14	2.0			353	238.700	GSS06-3M □□□071C31	810
	9.8	1.8	12	1.8			392	269.500	GSS06-3M □□□071C31	810
	9.4	2.9	12	2.9			416	279.028	GSS07-3M □□□071C31	810
	9.3	0.8	11	0.8			438	283.333	GSS05-3M □□□071C31	810
	8.5	1.6	10	1.6			454	310.689	GSS06-3M □□□071C31	810
	8.2	2.5	10	2.5			485	321.673	GSS07-3M □□□071C31	810
	7.5	1.4	9.2	1.4			506	350.778	GSS06-3M □□□071C31	810
	7.2	2.3	8.9	2.3			538	363.179	GSS07-3M □□□071C31	810
	6.8	1.3	8.4	1.3			561	386.467	GSS06-3M □□□071C31	810
	6.7	2.1	8.2	2.1			587	394.245	GSS07-3M □□□071C31	810
	6	1.2	7.4	1.1			625	436.333	GSS06-3M □□□071C31	810
	5.9	1.9	7.3	1.9			654	445.116	GSS07-3M □□□071C31	810
	5.4	1.7	6.6	1.7			726	490.403	GSS07-3M □□□071C31	810
	5.3	1.0	6.5	1.0			714	497.722	GSS06-3M □□□071C31	810
	4.8	1.5	5.8	1.5			808	553.681	GSS07-3M □□□071C31	810
	4.7	0.9	5.8	0.9			792	561.944	GSS06-3M □□□071C31	810
	4.2	0.8					890	630.803	GSS06-3M □□□071C31	810
	4.1	1.3	5.1	1.3			930	634.639	GSS07-3M □□□071C31	810
	3.7	1.2	4.5	1.2			1033	716.528	GSS07-3M □□□071C31	810
	3.2	1.0	3.9	1.0			1201	833.556	GSS07-3M □□□071C31	810
	2.8	0.9	3.4	0.9			1331	941.111	GSS07-3M □□□071C31	810
	2.6	0.9	3.2	0.9			1435	1011.633	GSS07-3M □□□071C31	810

50 Hz: P_N=0.55 kW
60 Hz: P_N=0.68 kW
87 Hz: P_N=1.0 kW

n_N	1405 r/min		1705 r/min		2515 r/min		M_2 [Nm]	i		
f_N	50 Hz		60 Hz		87 Hz					
P_N	0.55 kW		0.68 kW		1.0 kW					
	n_2 [r/min]	c	n_2 [r/min]	c	n_2 [r/min]	c				
	249	4.5	302	4.5	446	4.5	18	5.639	GSS04-2M □□□071C42	802
	182	4.5	221	4.5	325	4.5	25	7.733	GSS04-2M □□□071C42	802
	155	4.5	189	4.5	278	4.3	29	9.042	GSS04-2M □□□071C42	802
	142	4.2	172	4.2	254	4.2	33	9.897	GSS04-2M □□□071C42	802
	130	4.2	158	4.2	232	4.2	36	10.827	GSS04-2M □□□071C42	802
	113	4.2	138	3.9	203	3.4	39	12.400	GSS04-2M □□□071C42	802
	102	3.4	124	3.4	182	3.4	46	13.810	GSS04-2M □□□071C42	802
	89	3.5	107	3.3	159	2.9	51	15.869	GSS04-2M □□□071C42	802
	81	3.2	98	3.1	145	2.7	55	17.360	GSS04-2M □□□071C42	802
	69	2.5	84	2.4	123	2.0	60	20.417	GSS04-2M □□□071C42	802
	64	2.5	77	2.5	114	2.3	71	22.143	GSS04-2M □□□071C42	802
	57	2.3	69	2.1	101	1.9	74	24.800	GSS04-2M □□□071C42	802
	52	2.1	63	2.0	93	2.0	87	27.125	GSS04-2M □□□071C42	802
	44	1.9	54	1.8	79	1.6	94	31.738	GSS04-2M □□□071C42	802
	44	3.1	54	2.9	79	2.5	95	31.738	GSS05-2M □□□071C42	802
	41	1.6	50	1.6	74	1.6	109	34.100	GSS04-2M □□□071C42	802
	40	3.1	48	3.1	71	2.8	114	35.306	GSS05-2M □□□071C42	802
	36	1.6	44	1.6	64	1.4	114	39.200	GSS04-2M □□□071C42	802
	36	2.7	44	2.5	64	2.2	116	39.200	GSS05-2M □□□071C42	802
	32	1.3	39	1.3	57	1.3	139	43.917	GSS04-2M □□□071C42	802
	32	2.5	39	2.5	57	2.4	143	43.917	GSS05-2M □□□071C42	802
	32	3.2	39	3.2	57	3.2	140	43.917	GSS06-2M □□□071C42	802
	28	1.3	34	1.2	50	1.2	144	50.000	GSS04-2M □□□071C42	802
	28	2.3	34	2.2	50	1.9	149	50.000	GSS05-2M □□□071C42	802
	26	1.1	31	1.1	46	1.1	159	54.250	GSS04-2M □□□071C42	802
	26	2.2	31	2.1	46	1.8	165	54.250	GSS05-2M □□□071C42	802
	23	1.0	28	1.0	41	1.0	174	61.250	GSS04-2M □□□071C42	802
	23	1.9	28	1.9	41	1.7	183	61.250	GSS05-2M □□□071C42	802
	21	0.9	25	0.9	37	0.9	198	68.200	GSS04-2M □□□071C42	802
	20	1.7	24	1.7	36	1.5	215	70.611	GSS05-2M □□□071C42	802
	18	0.8	22	0.8	33	0.8	217	77.000	GSS04-2M □□□071C42	802
	18	1.5	21	1.5	32	1.4	240	79.722	GSS05-2M □□□071C42	802
	18	3.0	21	3.0	32	2.8	232	79.722	GSS06-2M □□□071C42	802
	16	1.3	19	1.3	29	1.3	268	87.833	GSS05-2M □□□071C42	802
	16	2.7	19	2.7	29	2.6	257	87.833	GSS06-2M □□□071C42	802
	14	1.2	17	1.2	25	1.2	297	99.167	GSS05-2M □□□071C42	802
	14	2.5	17	2.4	25	2.4	287	99.167	GSS06-2M □□□071C42	802
	12	1.1	15	1.0	22	1.0	344	113.667	GSS05-2M □□□071C42	802
	12	2.2	15	2.1	22	2.1	330	113.667	GSS06-2M □□□071C42	802
	11	0.9	14	0.8			391	125.476	GSS05-3M □□□071C42	810
	11	1.0	13	0.9	20	0.9	379	128.333	GSS05-2M □□□071C42	802

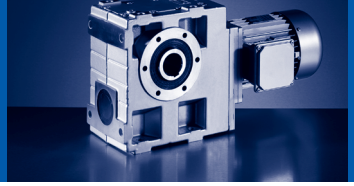

50 Hz: P_N=0.55 kW
60 Hz: P_N=0.68 kW
87 Hz: P_N=1.0 kW

n_N	1405 r/min		1705 r/min		2515 r/min		M_2 [Nm]	i		
f_N	50 Hz		60 Hz		87 Hz					
P_N	0.55 kW		0.68 kW		1.0 kW					
	n_2 [r/min]	c	n_2 [r/min]	c	n_2 [r/min]	c				
	11	1.9	13	1.9	20	1.9	368	128.333	GSS06-2M □□□071C42	802
	11	2.0	14	2.0	20	2.0	349	126.531	GSS06-3M □□□071C42	810
	10	0.9	12	0.9	18	0.9	413	137.950	GSS05-2M □□□071C42	802
	10	1.8	12	1.8	18	1.7	398	137.950	GSS06-2M □□□071C42	802
	9.8	1.8	12	1.8	18	1.8	388	142.857	GSS06-3M □□□071C42	810
	9.8	3.1	12	3.0	18	3.0	397	142.857	GSS07-3M □□□071C42	810
	9.1	1.7	11	1.7	16	1.6	424	155.000	GSS06-3M □□□071C42	810
	9.1	2.8	11	2.8	16	2.7	437	155.000	GSS07-3M □□□071C42	810
	9	1.6	11	1.6	16	1.6	443	155.750	GSS06-2M □□□071C42	802
	8.1	1.4	9.8	1.4	14	1.4	498	174.375	GSS06-2M □□□071C42	802
	8	1.5	9.7	1.5	14	1.5	472	175.000	GSS06-3M □□□071C42	810
	8	2.5	9.7	2.5	14	2.5	485	175.000	GSS07-3M □□□071C42	810
	7.2	1.4	8.8	1.3	13	1.3	529	194.857	GSS06-3M □□□071C42	810
	7.1	1.3	8.7	1.3	13	1.3	554	196.875	GSS06-2M □□□071C42	802
	7	2.2	8.5	2.2	13	2.1	561	201.746	GSS07-3M □□□071C42	810
	6.4	1.2	7.8	1.2	11	1.2	589	220.000	GSS06-3M □□□071C42	810
	6.2	2.0	7.5	2.0	11	1.9	625	227.778	GSS07-3M □□□071C42	810
	5.9	1.1	7.1	1.1	11	1.1	642	238.700	GSS06-3M □□□071C42	810
	5.7	1.8	6.9	1.8	10	1.8	684	247.139	GSS07-3M □□□071C42	810
	5.2	1.0	6.3	1.0	9.3	1.0	712	269.500	GSS06-3M □□□071C42	810
	5	1.6	6.1	1.6	9	1.6	761	279.028	GSS07-3M □□□071C42	810
	4.5	0.9	5.5	0.9	8.1	0.9	821	310.689	GSS06-3M □□□071C42	810
	4.4	1.4	5.3	1.4	7.8	1.4	881	321.673	GSS07-3M □□□071C42	810
	3.9	1.3	4.7	1.3	6.9	1.2	978	363.179	GSS07-3M □□□071C42	810
	3.6	1.2	4.3	1.2	6.4	1.1	1066	394.245	GSS07-3M □□□071C42	810
	3.2	1.1	3.8	1.0	5.7	1.0	1182	445.116	GSS07-3M □□□071C42	810
	2.9	1.0	3.5	0.9	5.1	0.9	1304	490.403	GSS07-3M □□□071C42	810
	2.5	0.9	3.1	0.9	4.5	0.8	1445	553.681	GSS07-3M □□□071C42	810

50 Hz: P_N=0.55 kW
60 Hz: P_N=0.66 kW

n_N	930 r/min		1130 r/min				M_2 [Nm]	i		
f_N	50 Hz		60 Hz							
P_N	0.55 kW		0.66 kW							
	n_2 [r/min]	c	n_2 [r/min]	c						
	165	3.7	200	3.7			28	5.639	GSS04-2M □□□080C33	802
	120	3.7	146	3.7			39	7.733	GSS04-2M □□□080C33	802
	103	3.7	125	3.7			44	9.042	GSS04-2M □□□080C33	802
	94	3.2	114	3.2			50	9.897	GSS04-2M □□□080C33	802
	86	2.9	104	2.9			55	10.827	GSS04-2M □□□080C33	802
	75	3.0	91	2.9			60	12.400	GSS04-2M □□□080C33	802
	67	2.3	82	2.3			70	13.810	GSS04-2M □□□080C33	802
	59	2.3	71	2.3			77	15.869	GSS04-2M □□□080C33	802
	54	2.1	65	2.1			84	17.360	GSS04-2M □□□080C33	802
	46	2.0	55	1.8			90	20.417	GSS04-2M □□□080C33	802
	42	1.7	51	1.7			107	22.143	GSS04-2M □□□080C33	802
	42	3.2	51	3.2			108	22.143	GSS05-2M □□□080C33	802
	38	1.6	46	1.6			111	24.800	GSS04-2M □□□080C33	802
	34	1.4	42	1.4			130	27.125	GSS04-2M □□□080C33	802
	34	2.7	42	2.7			133	27.125	GSS05-2M □□□080C33	802
	29	1.3	36	1.3			141	31.738	GSS04-2M □□□080C33	802
	29	2.4	36	2.2			145	31.738	GSS05-2M □□□080C33	802
	27	1.1	33	1.1			162	34.100	GSS04-2M □□□080C33	802
	26	2.1	32	2.0			174	35.306	GSS05-2M □□□080C33	802
	26	3.1	32	3.1			169	35.306	GSS06-2M □□□080C33	802
	24	1.1	29	1.1			169	39.200	GSS04-2M □□□080C33	802
	24	2.0	29	2.0			177	39.200	GSS05-2M □□□080C33	802
	21	0.9	26	0.9			207	43.917	GSS04-2M □□□080C33	802
	21	1.7	26	1.7			215	43.917	GSS05-2M □□□080C33	802
	21	2.6	26	2.6			210	43.917	GSS06-2M □□□080C33	802
	19	0.9	23	0.8			213	50.000	GSS04-2M □□□080C33	802
	19	1.6	23	1.6			227	50.000	GSS05-2M □□□080C33	802
	19	3.2	23	3.2			220	50.000	GSS06-2M □□□080C33	802
	17	1.4	21	1.4			250	54.250	GSS05-2M □□□080C33	802
	15	1.3	18	1.3			278	61.250	GSS05-2M □□□080C33	802
	13	1.1	16	1.1			323	70.611	GSS05-2M □□□080C33	802
	13	2.3	16	2.3			310	70.611	GSS06-2M □□□080C33	802
	12	1.0	14	1.0			357	79.722	GSS05-2M □□□080C33	802
	12	2.1	14	2.0			346	79.722	GSS06-2M □□□080C33	802
	11	0.9	13	0.9			397	87.833	GSS05-2M □□□080C33	802
	11	1.9	13	1.8			383	87.833	GSS06-2M □□□080C33	802
	9.4	0.8	11	0.8			438	99.167	GSS05-2M □□□080C33	802
	9.4	1.7	11	1.7			427	99.167	GSS06-2M □□□080C33	802
	8.2	1.5	9.9	1.4			490	113.667	GSS06-2M □□□080C33	802
	8.2	2.4	9.9	2.4			506	113.667	GSS07-2M □□□080C33	802
	7.4	1.4	8.9	1.4			519	126.531	GSS06-3M □□□080C33	810

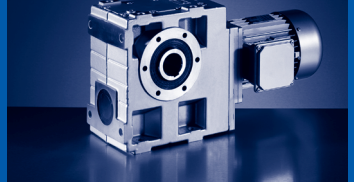

50 Hz: P_N=0.55 kW
60 Hz: P_N=0.66 kW

n_N	930 r/min		1130 r/min				M_2 [Nm]	i		
f_N	50 Hz		60 Hz							
P_N	0.55 kW		0.66 kW							
	n_2 [r/min]	c	n_2 [r/min]	c						
	7.4	2.3	8.9	2.3			533	126.531	GSS07-3M □□□080C33	810
	7.3	1.3	8.8	1.3			545	128.333	GSS06-2M □□□080C33	802
	7.3	2.2	8.8	2.2			563	128.333	GSS07-2M □□□080C33	802
	6.7	1.2	8.2	1.2			590	137.950	GSS06-2M □□□080C33	802
	6.7	2.0	8.2	2.0			607	137.950	GSS07-2M □□□080C33	802
	6.5	1.2	7.9	1.2			578	142.857	GSS06-3M □□□080C33	810
	6.5	2.1	7.9	2.1			594	142.857	GSS07-3M □□□080C33	810
	6	1.1	7.3	1.1			656	155.750	GSS06-2M □□□080C33	802
	6	1.1	7.3	1.1			630	155.000	GSS06-3M □□□080C33	810
	6	1.8	7.3	1.8			676	155.750	GSS07-2M □□□080C33	802
	6	1.9	7.3	1.9			649	155.000	GSS07-3M □□□080C33	810
	5.3	1.0	6.5	1.0			737	174.375	GSS06-2M □□□080C33	802
	5.3	1.0	6.5	1.0			699	175.000	GSS06-3M □□□080C33	810
	5.3	1.6	6.5	1.6			763	174.375	GSS07-2M □□□080C33	802
	5.3	1.7	6.5	1.7			722	175.000	GSS07-3M □□□080C33	810
	4.8	0.9	5.8	0.9			780	194.857	GSS06-3M □□□080C33	810
	4.7	0.9	5.7	0.9			816	196.875	GSS06-2M □□□080C33	802
	4.7	1.5	5.7	1.5			848	196.875	GSS07-2M □□□080C33	802
	4.6	1.5	5.6	1.5			837	201.746	GSS07-3M □□□080C33	810
	4.2	0.8	5.1	0.8			863	220.000	GSS06-3M □□□080C33	810
	4.1	1.3	5	1.3			930	227.778	GSS07-3M □□□080C33	810
	3.8	1.2	4.6	1.2			1014	247.139	GSS07-3M □□□080C33	810
	3.3	1.1	4.1	1.1			1125	279.028	GSS07-3M □□□080C33	810
	2.9	1.0	3.5	1.0			1294	321.673	GSS07-3M □□□080C33	810
	2.6	0.9	3.1	0.9			1433	363.179	GSS07-3M □□□080C33	810
	2.4	0.8					1558	394.245	GSS07-3M □□□080C33	810

50 Hz: P_N=0.75 kW
60 Hz: P_N=0.92 kW

n_N	2720 r/min		3320 r/min				M_2 [Nm]	i		
f_N	50 Hz		60 Hz							
P_N	0.75 kW		0.92 kW							
	n_2 [r/min]	c	n_2 [r/min]	c						
	482	5.5	589	4.2			13	5.639	GSS04-2M □□□080C11	802
	352	5.9	429	4.8			17	7.733	GSS04-2M □□□080C11	802
	301	5.7	367	5.0			20	9.042	GSS04-2M □□□080C11	802
	251	5.7	307	4.9			25	10.827	GSS04-2M □□□080C11	802
	219	4.7	268	4.4			28	12.400	GSS04-2M □□□080C11	802
	197	4.8	240	4.6			32	13.810	GSS04-2M □□□080C11	802
	171	3.9	209	3.7			36	15.869	GSS04-2M □□□080C11	802
	157	3.7	191	3.5			39	17.360	GSS04-2M □□□080C11	802
	133	2.8	163	2.6			42	20.417	GSS04-2M □□□080C11	802
	123	3.2	150	3.0			50	22.143	GSS04-2M □□□080C11	802
	110	2.5	134	2.3			53	24.800	GSS04-2M □□□080C11	802
	100	2.8	122	2.6			62	27.125	GSS04-2M □□□080C11	802
	86	2.1	105	2.0			68	31.738	GSS04-2M □□□080C11	802
	80	2.3	97	2.2			78	34.100	GSS04-2M □□□080C11	802
	69	1.8	85	1.7			82	39.200	GSS04-2M □□□080C11	802
	69	3.0	85	2.8			81	39.200	GSS05-2M □□□080C11	802
	62	1.8	76	1.8			100	43.917	GSS04-2M □□□080C11	802
	62	3.3	76	3.1			100	43.917	GSS05-2M □□□080C11	802
	54	1.6	66	1.5			104	50.000	GSS04-2M □□□080C11	802
	54	2.6	66	2.4			104	50.000	GSS05-2M □□□080C11	802
	50	1.5	61	1.4			115	54.250	GSS04-2M □□□080C11	802
	50	2.4	61	2.3			116	54.250	GSS05-2M □□□080C11	802
	44	1.4	54	1.3			126	61.250	GSS04-2M □□□080C11	802
	44	2.3	54	2.1			128	61.250	GSS05-2M □□□080C11	802
	40	1.3	49	1.2			143	68.200	GSS04-2M □□□080C11	802
	39	2.1	47	1.9			151	70.611	GSS05-2M □□□080C11	802
	35	1.1	43	1.1			158	77.000	GSS04-2M □□□080C11	802
	34	1.9	42	1.8			168	79.722	GSS05-2M □□□080C11	802
	31	1.0	38	1.0			184	87.833	GSS04-2M □□□080C11	802
	31	1.8	38	1.7			189	87.833	GSS05-2M □□□080C11	802
	27	0.9	34	0.9			202	99.167	GSS04-2M □□□080C11	802
	27	1.7	34	1.6			210	99.167	GSS05-2M □□□080C11	802
	27	3.2	34	3.0			207	99.167	GSS06-2M □□□080C11	802
	24	1.5	29	1.4			246	113.667	GSS05-2M □□□080C11	802
	24	3.0	29	2.8			239	113.667	GSS06-2M □□□080C11	802
	22	1.0	27	0.9			285	125.476	GSS05-3M □□□080C11	810
	22	2.8	26	2.7			253	126.531	GSS06-3M □□□080C11	810
	21	1.3	26	1.3			273	128.333	GSS05-2M □□□080C11	802
	21	2.6	26	2.6			267	128.333	GSS06-2M □□□080C11	802
	20	1.2	24	1.2			298	137.950	GSS05-2M □□□080C11	802
	20	2.5	24	2.4			289	137.950	GSS06-2M □□□080C11	802

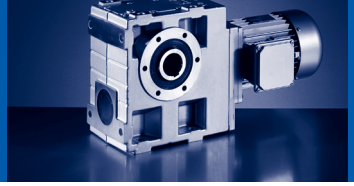

50 Hz: P_N=0.75 kW
60 Hz: P_N=0.92 kW

n_N	2720 r/min		3320 r/min				M_2 [Nm]	i		
f_N	50 Hz		60 Hz							
P_N	0.75 kW		0.92 kW							
	n_2 [r/min]	c	n_2 [r/min]	c						
	19	2.5	23	2.4			282	142.857	GSS06-3M □□□080C11	810
	18	0.9	22	0.8			347	153.708	GSS05-3M □□□080C11	810
	18	1.1	21	1.1			332	155.750	GSS05-2M □□□080C11	802
	18	2.2	21	2.2			323	155.750	GSS06-2M □□□080C11	802
	18	2.3	21	2.3			309	155.000	GSS06-3M □□□080C11	810
	16	2.0	19	1.9			363	174.375	GSS06-2M □□□080C11	802
	16	2.1	19	2.0			344	175.000	GSS06-3M □□□080C11	810
	14	1.8	17	1.7			405	196.875	GSS06-2M □□□080C11	802
	14	1.9	17	1.8			385	194.857	GSS06-3M □□□080C11	810
	14	3.0	17	2.9			413	196.875	GSS07-2M □□□080C11	802
	14	3.0	17	3.0			406	201.746	GSS07-3M □□□080C11	810
	12	1.7	15	1.7			430	220.000	GSS06-3M □□□080C11	810
	12	2.7	15	2.7			454	227.778	GSS07-3M □□□080C11	810
	11	1.5	14	1.5			469	238.700	GSS06-3M □□□080C11	810
	11	2.5	13	2.5			497	247.139	GSS07-3M □□□080C11	810
	10	1.4	12	1.4			520	269.500	GSS06-3M □□□080C11	810
	9.8	2.2	12	2.2			553	279.028	GSS07-3M □□□080C11	810
	8.8	1.2	11	1.2			602	310.689	GSS06-3M □□□080C11	810
	8.5	1.9	10	1.9			645	321.673	GSS07-3M □□□080C11	810
	7.8	1.1	9.5	1.1			671	350.778	GSS06-3M □□□080C11	810
	7.5	1.7	9.1	1.7			715	363.179	GSS07-3M □□□080C11	810
	7	1.0	8.6	1.0			743	386.467	GSS06-3M □□□080C11	810
	6.9	1.6	8.4	1.6			779	394.245	GSS07-3M □□□080C11	810
	6.2	0.9	7.6	0.9			827	436.333	GSS06-3M □□□080C11	810
	6.1	1.4	7.5	1.4			868	445.116	GSS07-3M □□□080C11	810
	5.6	1.3	6.8	1.3			962	490.403	GSS07-3M □□□080C11	810
	4.9	1.2	6	1.2			1070	553.681	GSS07-3M □□□080C11	810
	4.3	1.0	5.2	1.0			1232	634.639	GSS07-3M □□□080C11	810
	3.8	0.9	4.6	0.9			1367	716.528	GSS07-3M □□□080C11	810

50 Hz: P_N=0.75 kW
60 Hz: P_N=0.92 kW
87 Hz: P_N=1.35 kW

n_N	1410 r/min		1710 r/min		2520 r/min		M_2 [Nm]	i		
f_N	50 Hz		60 Hz		87 Hz					
P_N	0.75 kW		0.92 kW		1.35 kW					
	n_2 [r/min]	c	n_2 [r/min]	c	n_2 [r/min]	c				
	250	4.2	303	4.2	447	3.4	25	5.639	GSS04-2M □□□080C32	802
	182	4.2	221	4.2	326	3.5	35	7.733	GSS04-2M □□□080C32	802
	156	3.8	189	3.6	279	3.1	39	9.042	GSS04-2M □□□080C32	802
	143	3.5	173	3.5	255	3.3	45	9.897	GSS04-2M □□□080C32	802
	130	3.2	158	3.2	233	3.1	49	10.827	GSS04-2M □□□080C32	802
	114	3.1	138	2.9	203	2.5	54	12.400	GSS04-2M □□□080C32	802
	102	2.5	124	2.5	183	2.5	63	13.810	GSS04-2M □□□080C32	802
	89	2.6	108	2.4	159	2.1	69	15.869	GSS04-2M □□□080C32	802
	81	2.3	99	2.3	145	2.0	76	17.360	GSS04-2M □□□080C32	802
	69	1.9	84	1.7	123	1.5	82	20.417	GSS04-2M □□□080C32	802
	64	1.8	77	1.8	114	1.7	97	22.143	GSS04-2M □□□080C32	802
	57	1.7	69	1.6	102	1.4	101	24.800	GSS04-2M □□□080C32	802
	52	1.5	63	1.5	93	1.5	118	27.125	GSS04-2M □□□080C32	802
	52	2.9	63	2.8	93	2.4	120	27.125	GSS05-2M □□□080C32	802
	44	1.4	54	1.3	79	1.2	129	31.738	GSS04-2M □□□080C32	802
	44	2.3	54	2.2	79	1.9	131	31.738	GSS05-2M □□□080C32	802
	41	1.2	50	1.2	74	1.2	148	34.100	GSS04-2M □□□080C32	802
	40	2.3	48	2.3	71	2.0	157	35.306	GSS05-2M □□□080C32	802
	36	1.2	44	1.1	64	1.0	155	39.200	GSS04-2M □□□080C32	802
	36	2.0	44	1.9	64	1.6	159	39.200	GSS05-2M □□□080C32	802
	32	1.0	39	0.9	57	0.9	190	43.917	GSS04-2M □□□080C32	802
	32	1.8	39	1.8	57	1.8	196	43.917	GSS05-2M □□□080C32	802
	32	2.9	39	2.9	57	2.9	191	43.917	GSS06-2M □□□080C32	802
	28	0.9	34	0.9	50	0.9	196	50.000	GSS04-2M □□□080C32	802
	28	1.7	34	1.6	50	1.4	204	50.000	GSS05-2M □□□080C32	802
	26	0.8	32	0.8	47	0.8	217	54.250	GSS04-2M □□□080C32	802
	26	1.6	32	1.5	47	1.3	226	54.250	GSS05-2M □□□080C32	802
	23	1.4	28	1.4	41	1.2	251	61.250	GSS05-2M □□□080C32	802
	20	1.2	24	1.2	36	1.1	294	70.611	GSS05-2M □□□080C32	802
	20	2.5	24	2.5	36	2.2	285	70.611	GSS06-2M □□□080C32	802
	18	1.1	21	1.1	32	1.0	328	79.722	GSS05-2M □□□080C32	802
	18	2.2	21	2.2	32	2.0	318	79.722	GSS06-2M □□□080C32	802
	16	1.0	20	1.0	29	1.0	365	87.833	GSS05-2M □□□080C32	802
	16	2.0	20	2.0	29	1.9	352	87.833	GSS06-2M □□□080C32	802
	14	0.9	17	0.9	25	0.9	405	99.167	GSS05-2M □□□080C32	802
	14	1.8	17	1.8	25	1.8	393	99.167	GSS06-2M □□□080C32	802
	12	1.6	15	1.6	22	1.5	452	113.667	GSS06-2M □□□080C32	802
	12	2.7	15	2.6	22	2.6	462	113.667	GSS07-2M □□□080C32	802
	11	1.4	13	1.4	20	1.4	503	128.333	GSS06-2M □□□080C32	802
	11	1.5	14	1.5	20	1.5	478	126.531	GSS06-3M □□□080C32	810
	11	2.4	13	2.4	20	2.3	516	128.333	GSS07-2M □□□080C32	802

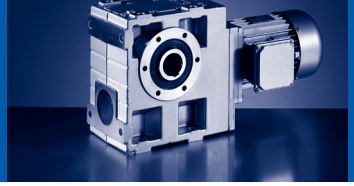

50 Hz: P_N=0.75 kW
60 Hz: P_N=0.92 kW
87 Hz: P_N=1.35 kW

n_N	1410 r/min		1710 r/min		2520 r/min		M_2 [Nm]	i		
f_N	50 Hz		60 Hz		87 Hz					
P_N	0.75 kW		0.92 kW		1.35 kW					
	n_2 [r/min]	c	n_2 [r/min]	c	n_2 [r/min]	c				
	11	2.5	14	2.5	20	2.5	490	126.531	GSS07-3M □□□080C32	810
	10	1.3	12	1.3	18	1.3	544	137.950	GSS06-2M □□□080C32	802
	10	2.2	12	2.2	18	2.2	560	137.950	GSS07-2M □□□080C32	802
	9.9	1.4	12	1.3	18	1.3	530	142.857	GSS06-3M □□□080C32	810
	9.9	2.3	12	2.2	18	2.2	546	142.857	GSS07-3M □□□080C32	810
	9.1	1.2	11	1.2	16	1.2	579	155.000	GSS06-3M □□□080C32	810
	9.1	1.2	11	1.2	16	1.2	605	155.750	GSS06-2M □□□080C32	802
	9.1	2.0	11	2.0	16	1.9	623	155.750	GSS07-2M □□□080C32	802
	9.1	2.1	11	2.1	16	2.0	599	155.000	GSS07-3M □□□080C32	810
	8.1	1.1	9.8	1.1	14	1.1	645	175.000	GSS06-3M □□□080C32	810
	8.1	1.1	9.8	1.1	15	1.0	679	174.375	GSS06-2M □□□080C32	802
	8.1	1.8	9.8	1.7	15	1.7	701	174.375	GSS07-2M □□□080C32	802
	8.1	1.9	9.8	1.8	14	1.8	664	175.000	GSS07-3M □□□080C32	810
	7.2	1.0	8.8	1.0	13	1.0	722	194.857	GSS06-3M □□□080C32	810
	7.2	1.0	8.7	0.9	13	0.9	755	196.875	GSS06-2M □□□080C32	802
	7.2	1.6	8.7	1.6	13	1.5	782	196.875	GSS07-2M □□□080C32	802
	7	1.6	8.5	1.6	13	1.6	768	201.746	GSS07-3M □□□080C32	810
	6.4	0.9	7.8	0.9	12	0.9	803	220.000	GSS06-3M □□□080C32	810
	6.2	1.5	7.5	1.4	11	1.4	855	227.778	GSS07-3M □□□080C32	810
	5.9	0.8	7.2	0.8			876	238.700	GSS06-3M □□□080C32	810
	5.7	1.3	6.9	1.3	10	1.3	935	247.139	GSS07-3M □□□080C32	810
	5.1	1.2	6.1	1.2	9	1.2	1039	279.028	GSS07-3M □□□080C32	810
	4.4	1.0	5.3	1.0	7.8	1.0	1203	321.673	GSS07-3M □□□080C32	810
	3.9	0.9	4.7	0.9	6.9	0.9	1335	363.179	GSS07-3M □□□080C32	810
	3.6	0.9	4.3	0.9	6.4	0.8	1455	394.245	GSS07-3M □□□080C32	810

50 Hz: P_N=1.1 kW
60 Hz: P_N=1.3 kW

n_N	2720 r/min		3320 r/min				M_2 [Nm]	i		
f_N	50 Hz		60 Hz							
P_N	1.1 kW		1.3 kW							
	n_2 [r/min]	c	n_2 [r/min]	c						
	482	3.8	589	2.8			19	5.639	GSS04-2M □□□080C31	802
	352	4.0	429	3.3			26	7.733	GSS04-2M □□□080C31	802
	301	3.9	367	3.4			30	9.042	GSS04-2M □□□080C31	802
	275	4.1	336	3.4			33	9.897	GSS04-2M □□□080C31	802
	251	3.9	307	3.3			37	10.827	GSS04-2M □□□080C31	802
	219	3.2	268	3.0			42	12.400	GSS04-2M □□□080C31	802
	197	3.3	240	3.1			47	13.810	GSS04-2M □□□080C31	802
	171	2.7	209	2.5			53	15.869	GSS04-2M □□□080C31	802
	157	2.5	191	2.4			58	17.360	GSS04-2M □□□080C31	802
	133	1.9	163	1.8			63	20.417	GSS04-2M □□□080C31	802
	123	2.2	150	2.0			74	22.143	GSS04-2M □□□080C31	802
	110	1.7	134	1.6			78	24.800	GSS04-2M □□□080C31	802
	100	1.9	122	1.8			91	27.125	GSS04-2M □□□080C31	802
	100	3.1	122	2.9			91	27.125	GSS05-2M □□□080C31	802
	86	1.5	105	1.4			100	31.738	GSS04-2M □□□080C31	802
	86	2.3	105	2.2			99	31.738	GSS05-2M □□□080C31	802
	80	1.6	97	1.5			115	34.100	GSS04-2M □□□080C31	802
	77	2.6	94	2.4			119	35.306	GSS05-2M □□□080C31	802
	69	1.2	85	1.2			121	39.200	GSS04-2M □□□080C31	802
	69	2.0	85	1.9			120	39.200	GSS05-2M □□□080C31	802
	62	1.2	76	1.2			147	43.917	GSS04-2M □□□080C31	802
	62	2.2	76	2.1			149	43.917	GSS05-2M □□□080C31	802
	54	1.1	66	1.0			153	50.000	GSS04-2M □□□080C31	802
	54	1.7	66	1.6			155	50.000	GSS05-2M □□□080C31	802
	50	1.0	61	1.0			169	54.250	GSS04-2M □□□080C31	802
	50	1.7	61	1.6			171	54.250	GSS05-2M □□□080C31	802
	44	0.9	54	0.9			186	61.250	GSS04-2M □□□080C31	802
	44	1.5	54	1.4			190	61.250	GSS05-2M □□□080C31	802
	40	0.9	49	0.8			211	68.200	GSS04-2M □□□080C31	802
	39	1.4	47	1.3			224	70.611	GSS05-2M □□□080C31	802
	39	2.8	47	2.6			221	70.611	GSS06-2M □□□080C31	802
	34	1.3	42	1.2			248	79.722	GSS05-2M □□□080C31	802
	34	2.5	42	2.4			247	79.722	GSS06-2M □□□080C31	802
	31	1.2	38	1.1			279	87.833	GSS05-2M □□□080C31	802
	31	2.4	38	2.3			274	87.833	GSS06-2M □□□080C31	802
	27	1.1	34	1.1			310	99.167	GSS05-2M □□□080C31	802
	27	2.2	34	2.1			307	99.167	GSS06-2M □□□080C31	802
	24	1.0	29	1.0			362	113.667	GSS05-2M □□□080C31	802
	24	2.0	29	1.9			354	113.667	GSS06-2M □□□080C31	802
	22	1.9	26	1.8			375	126.531	GSS06-3M □□□080C31	810
	22	3.2	26	3.2			379	126.531	GSS07-3M □□□080C31	810

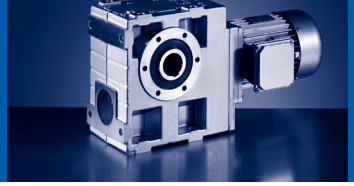

50 Hz: P_N=1.1 kW
60 Hz: P_N=1.3 kW

n_N	2720 r/min		3320 r/min				M_2 [Nm]	i		
f_N	50 Hz		60 Hz							
P_N	1.1 kW		1.3 kW							
	n_2 [r/min]	c	n_2 [r/min]	c						
	21	0.9	26	0.9			402	128.333	GSS05-2M □□□080C31	802
	21	1.8	26	1.8			396	128.333	GSS06-2M □□□080C31	802
	21	3.0	26	3.0			401	128.333	GSS07-2M □□□080C31	802
	20	0.8	24	0.8			439	137.950	GSS05-2M □□□080C31	802
	20	1.7	24	1.7			428	137.950	GSS06-2M □□□080C31	802
	20	2.8	24	2.8			434	137.950	GSS07-2M □□□080C31	802
	19	1.7	23	1.7			418	142.857	GSS06-3M □□□080C31	810
	19	2.9	23	2.9			426	142.857	GSS07-3M □□□080C31	810
	18	1.5	21	1.5			477	155.750	GSS06-2M □□□080C31	802
	18	1.6	21	1.6			457	155.000	GSS06-3M □□□080C31	810
	18	2.5	21	2.5			486	155.750	GSS07-2M □□□080C31	802
	18	2.6	21	2.6			464	155.000	GSS07-3M □□□080C31	810
	16	1.3	19	1.3			536	174.375	GSS06-2M □□□080C31	802
	16	1.4	19	1.4			509	175.000	GSS06-3M □□□080C31	810
	16	2.3	19	2.2			547	174.375	GSS07-2M □□□080C31	802
	16	2.4	19	2.3			521	175.000	GSS07-3M □□□080C31	810
	14	1.2	17	1.2			598	196.875	GSS06-2M □□□080C31	802
	14	1.3	17	1.3			569	194.857	GSS06-3M □□□080C31	810
	14	2.0	17	2.0			612	196.875	GSS07-2M □□□080C31	802
	14	2.1	17	2.0			602	201.746	GSS07-3M □□□080C31	810
	12	1.1	15	1.1			634	220.000	GSS06-3M □□□080C31	810
	12	1.8	15	1.8			673	227.778	GSS07-3M □□□080C31	810
	11	1.0	14	1.0			692	238.700	GSS06-3M □□□080C31	810
	11	1.7	13	1.7			736	247.139	GSS07-3M □□□080C31	810
	10	0.9	12	0.9			768	269.500	GSS06-3M □□□080C31	810
	9.8	1.5	12	1.5			819	279.028	GSS07-3M □□□080C31	810
	8.8	0.8	11	0.8			888	310.689	GSS06-3M □□□080C31	810
	8.5	1.3	10	1.3			954	321.673	GSS07-3M □□□080C31	810
	7.5	1.2	9.1	1.2			1056	363.179	GSS07-3M □□□080C31	810
	6.9	1.1	8.4	1.1			1150	394.245	GSS07-3M □□□080C31	810
	6.1	1.0	7.5	1.0			1281	445.116	GSS07-3M □□□080C31	810
	5.6	0.9	6.8	0.9			1419	490.403	GSS07-3M □□□080C31	810

50 Hz: P_N=1.1 kW
60 Hz: P_N=1.3 kW
87 Hz: P_N=2.0 kW

n_N	1390 r/min		1690 r/min		2500 r/min		M_2 [Nm]	i		
f_N	50 Hz		60 Hz		87 Hz					
P_N	1.1 kW		1.3 kW		2.0 kW					
	n_2 [r/min]	c	n_2 [r/min]	c	n_2 [r/min]	c				
	247	3.9	300	3.4	443	2.3	37	5.639	GSS04-2M □□□080C42	802
	180	3.0	219	2.9	323	2.4	52	7.733	GSS04-2M □□□080C42	802
	154	2.6	187	2.4	277	2.1	59	9.042	GSS04-2M □□□080C42	802
	140	2.4	171	2.4	253	2.2	67	9.897	GSS04-2M □□□080C42	802
	128	2.2	156	2.2	231	2.1	74	10.827	GSS04-2M □□□080C42	802
	112	2.1	136	1.9	202	1.7	82	12.400	GSS04-2M □□□080C42	802
	101	1.7	122	1.7	181	1.7	95	13.810	GSS04-2M □□□080C42	802
	101	2.9	122	2.9	181	2.8	94	13.810	GSS05-2M □□□080C42	802
	88	1.7	107	1.6	158	1.4	104	15.869	GSS04-2M □□□080C42	802
	88	2.8	107	2.7	158	2.3	104	15.869	GSS05-2M □□□080C42	802
	80	1.6	97	1.5	144	1.4	114	17.360	GSS04-2M □□□080C42	802
	80	2.7	97	2.5	144	2.2	114	17.360	GSS05-2M □□□080C42	802
	68	1.2	83	1.2	122	1.0	123	20.417	GSS04-2M □□□080C42	802
	68	2.0	83	1.9	122	1.7	123	20.417	GSS05-2M □□□080C42	802
	63	1.2	76	1.2	113	1.2	145	22.143	GSS04-2M □□□080C42	802
	63	2.3	76	2.1	113	1.9	147	22.143	GSS05-2M □□□080C42	802
	56	1.1	68	1.1	101	0.9	152	24.800	GSS04-2M □□□080C42	802
	56	1.8	68	1.7	101	1.5	153	24.800	GSS05-2M □□□080C42	802
	51	1.0	62	1.0	92	1.0	177	27.125	GSS04-2M □□□080C42	802
	51	2.0	62	1.9	92	1.6	180	27.125	GSS05-2M □□□080C42	802
	44	0.9	53	0.9			193	31.738	GSS04-2M □□□080C42	802
	44	1.6	53	1.5	79	1.3	196	31.738	GSS05-2M □□□080C42	802
	44	3.1	53	2.9	79	2.3	194	31.738	GSS06-2M □□□080C42	802
	39	1.5	48	1.5	71	1.4	235	35.306	GSS05-2M □□□080C42	802
	39	3.1	48	3.1	71	2.7	229	35.306	GSS06-2M □□□080C42	802
	36	1.4	43	1.3	64	1.1	239	39.200	GSS05-2M □□□080C42	802
	36	2.6	43	2.5	64	2.1	238	39.200	GSS06-2M □□□080C42	802
	32	1.2	39	1.2	57	1.2	293	43.917	GSS05-2M □□□080C42	802
	32	2.5	39	2.5	57	2.4	285	43.917	GSS06-2M □□□080C42	802
	32	3.1	39	3.1	58	3.1	283	43.271	GSS07-2M □□□080C42	802
	28	1.2	34	1.1	50	0.9	306	50.000	GSS05-2M □□□080C42	802
	28	2.3	34	2.1	50	1.8	303	50.000	GSS06-2M □□□080C42	802
	26	1.1	31	1.0	46	0.9	338	54.250	GSS05-2M □□□080C42	802
	26	2.2	31	2.0	46	1.8	331	54.250	GSS06-2M □□□080C42	802
	23	1.0	28	1.0	41	0.8	375	61.250	GSS05-2M □□□080C42	802
	23	1.9	28	1.9	41	1.6	370	61.250	GSS06-2M □□□080C42	802
	20	0.8	24	0.8			440	70.611	GSS05-2M □□□080C42	802
	20	1.7	24	1.7	35	1.5	428	70.611	GSS06-2M □□□080C42	802
	20	2.8	24	2.8	35	2.7	434	70.611	GSS07-2M □□□080C42	802
	17	1.5	21	1.5	31	1.4	478	79.722	GSS06-2M □□□080C42	802
	17	2.5	21	2.5	31	2.5	487	79.722	GSS07-2M □□□080C42	802

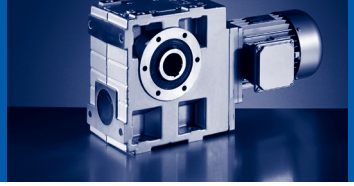

50 Hz: P_N=1.1 kW
60 Hz: P_N=1.3 kW
87 Hz: P_N=2.0 kW

n_N	1390 r/min		1690 r/min		2500 r/min		M_2 [Nm]	i		
f_N	50 Hz		60 Hz		87 Hz					
P_N	1.1 kW		1.3 kW		2.0 kW					
	n_2 [r/min]	c	n_2 [r/min]	c	n_2 [r/min]	c				
	16	1.4	19	1.3	29	1.3	528	87.833	GSS06-2M □□□080C42	802
	16	2.3	20	2.3	29	2.3	531	86.542	GSS07-2M □□□080C42	802
	14	1.2	17	1.2	25	1.2	589	99.167	GSS06-2M □□□080C42	802
	14	2.1	17	2.1	26	2.0	594	97.708	GSS07-2M □□□080C42	802
	12	1.1	15	1.1	22	1.0	676	113.667	GSS06-2M □□□080C42	802
	12	1.8	15	1.8	22	1.8	694	113.667	GSS07-2M □□□080C42	802
	11	1.0	13	1.0	20	1.0	716	126.531	GSS06-3M □□□080C42	810
	11	1.0	13	1.0	20	0.9	753	128.333	GSS06-2M □□□080C42	802
	11	1.6	13	1.6	20	1.6	774	128.333	GSS07-2M □□□080C42	802
	11	1.7	13	1.7	20	1.7	736	126.531	GSS07-3M □□□080C42	810
	10	0.9	12	0.9	18	0.9	814	137.950	GSS06-2M □□□080C42	802
	10	1.5	12	1.5	18	1.5	840	137.950	GSS07-2M □□□080C42	802
	9.7	0.9	12	0.9	18	0.9	793	142.857	GSS06-3M □□□080C42	810
	9.7	1.5	12	1.5	18	1.5	820	142.857	GSS07-3M □□□080C42	810
	9	0.8	11	0.8	16	0.8	866	155.000	GSS06-3M □□□080C42	810
	9	1.4	11	1.4	16	1.4	899	155.000	GSS07-3M □□□080C42	810
	8.9	1.3	11	1.3	16	1.3	934	155.750	GSS07-2M □□□080C42	802
	8	1.2	9.7	1.2	14	1.2	1051	174.375	GSS07-2M □□□080C42	802
	7.9	1.3	9.7	1.2	14	1.2	996	175.000	GSS07-3M □□□080C42	810
	7.1	1.1	8.6	1.1	13	1.0	1171	196.875	GSS07-2M □□□080C42	802
	6.9	1.1	8.4	1.1	12	1.1	1150	201.746	GSS07-3M □□□080C42	810
	6.1	1.0	7.4	1.0	11	1.0	1280	227.778	GSS07-3M □□□080C42	810
	5.6	0.9	6.8	0.9	10	0.9	1398	247.139	GSS07-3M □□□080C42	810
	5	0.8					1554	279.028	GSS07-3M □□□080C42	810

50 Hz: P_N=1.5 kW
60 Hz: P_N=1.8 kW

n_N	2710 r/min		3310 r/min				M_2 [Nm]	i		
f_N	50 Hz		60 Hz							
P_N	1.5 kW		1.8 kW							
	n_2 [r/min]	c	n_2 [r/min]	c						
	481	2.8	587	2.1			26	5.639	GSS04-2M □□□090C11	802
	350	3.0	428	2.4			36	7.733	GSS04-2M □□□090C11	802
	300	2.8	366	2.5			42	9.042	GSS04-2M □□□090C11	802
	274	3.0	335	2.5			46	9.897	GSS04-2M □□□090C11	802
	250	2.8	306	2.4			51	10.827	GSS04-2M □□□090C11	802
	219	2.3	267	2.2			57	12.400	GSS04-2M □□□090C11	802
	196	2.4	240	2.3			65	13.810	GSS04-2M □□□090C11	802
	171	2.0	209	1.9			74	15.869	GSS04-2M □□□090C11	802
	171	3.2	209	3.0			72	15.869	GSS05-2M □□□090C11	802
	156	1.9	191	1.7			80	17.360	GSS04-2M □□□090C11	802
	156	3.0	191	2.8			79	17.360	GSS05-2M □□□090C11	802
	133	1.4	162	1.3			86	20.417	GSS04-2M □□□090C11	802
	133	2.1	162	1.7			84	20.417	GSS05-2M □□□090C11	802
	122	1.6	150	1.5			103	22.143	GSS04-2M □□□090C11	802
	122	2.6	150	2.4			102	22.143	GSS05-2M □□□090C11	802
	109	1.2	134	1.2			107	24.800	GSS04-2M □□□090C11	802
	109	2.0	134	1.9			105	24.800	GSS05-2M □□□090C11	802
	100	1.4	122	1.3			125	27.125	GSS04-2M □□□090C11	802
	100	2.2	122	2.1			126	27.125	GSS05-2M □□□090C11	802
	85	1.1	104	1.0			137	31.738	GSS04-2M □□□090C11	802
	85	1.7	104	1.6			136	31.738	GSS05-2M □□□090C11	802
	85	3.0	104	2.6			138	31.738	GSS06-2M □□□090C11	802
	77	1.9	94	1.8			164	35.306	GSS05-2M □□□090C11	802
	69	0.9	84	0.9			166	39.200	GSS04-2M □□□090C11	802
	69	1.5	84	1.4			166	39.200	GSS05-2M □□□090C11	802
	69	2.8	84	2.4			168	39.200	GSS06-2M □□□090C11	802
	62	1.6	75	1.5			205	43.917	GSS05-2M □□□090C11	802
	62	3.2	75	3.0			201	43.917	GSS06-2M □□□090C11	802
	54	1.3	66	1.2			213	50.000	GSS05-2M □□□090C11	802
	54	2.5	66	2.3			215	50.000	GSS06-2M □□□090C11	802
	50	1.2	61	1.1			236	54.250	GSS05-2M □□□090C11	802
	50	2.4	61	2.3			235	54.250	GSS06-2M □□□090C11	802
	44	1.1	54	1.1			261	61.250	GSS05-2M □□□090C11	802
	44	2.2	54	2.0			263	61.250	GSS06-2M □□□090C11	802
	38	1.0	47	1.0			308	70.611	GSS05-2M □□□090C11	802
	38	2.0	47	1.9			305	70.611	GSS06-2M □□□090C11	802
	34	1.0	42	0.9			341	79.722	GSS05-2M □□□090C11	802
	34	1.9	42	1.7			341	79.722	GSS06-2M □□□090C11	802
	31	0.9	38	0.8			383	87.833	GSS05-2M □□□090C11	802
	31	1.8	38	1.7			379	87.833	GSS06-2M □□□090C11	802
	31	3.2	38	3.0			376	86.542	GSS07-2M □□□090C11	802

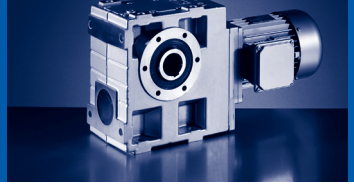

50 Hz: P_N=1.5 kW
60 Hz: P_N=1.8 kW

n_N	2710 r/min		3310 r/min				M_2 [Nm]	i		
f_N	50 Hz		60 Hz							
P_N	1.5 kW		1.8 kW							
	n_2 [r/min]	c	n_2 [r/min]	c						
	28	2.9	34	2.7			422	97.708	GSS07-2M □□□090C11	802
	27	0.8					425	99.167	GSS05-2M □□□090C11	802
	27	1.6	33	1.5			423	99.167	GSS06-2M □□□090C11	802
	24	1.5	29	1.4			488	113.667	GSS06-2M □□□090C11	802
	24	2.5	29	2.5			494	113.667	GSS07-2M □□□090C11	802
	21	1.3	26	1.3			545	128.333	GSS06-2M □□□090C11	802
	21	1.4	26	1.3			517	126.531	GSS06-3M □□□090C11	810
	21	2.2	26	2.2			554	128.333	GSS07-2M □□□090C11	802
	21	2.3	26	2.3			525	126.531	GSS07-3M □□□090C11	810
	20	1.2	24	1.2			588	137.950	GSS06-2M □□□090C11	802
	20	2.1	24	2.1			599	137.950	GSS07-2M □□□090C11	802
	19	1.3	23	1.2			576	142.857	GSS06-3M □□□090C11	810
	19	2.1	23	2.1			589	142.857	GSS07-3M □□□090C11	810
	18	1.1	21	1.1			629	155.000	GSS06-3M □□□090C11	810
	18	1.9	21	1.9			641	155.000	GSS07-3M □□□090C11	810
	17	1.1	21	1.1			657	155.750	GSS06-2M □□□090C11	802
	17	1.8	21	1.8			671	155.750	GSS07-2M □□□090C11	802
	16	1.0	19	1.0			700	175.000	GSS06-3M □□□090C11	810
	16	1.7	19	1.6			754	174.375	GSS07-2M □□□090C11	802
	16	1.7	19	1.7			718	175.000	GSS07-3M □□□090C11	810
	14	1.5	17	1.5			843	196.875	GSS07-2M □□□090C11	802
	13	1.5	16	1.5			830	201.746	GSS07-3M □□□090C11	810
	12	1.3	15	1.3			927	227.778	GSS07-3M □□□090C11	810
	11	1.2	13	1.2			1013	247.139	GSS07-3M □□□090C11	810
	9.7	1.1	12	1.1			1127	279.028	GSS07-3M □□□090C11	810
	8.4	1.0	10	1.0			1311	321.673	GSS07-3M □□□090C11	810
	7.5	0.9	9.1	0.9			1451	363.179	GSS07-3M □□□090C11	810

50 Hz: P_N=1.5 kW
60 Hz: P_N=1.8 kW
87 Hz: P_N=2.7 kW

n_N	1410 r/min		1710 r/min		2520 r/min		M_2 [Nm]	i		
f_N	50 Hz		60 Hz		87 Hz					
P_N	1.5 kW		1.8 kW		2.7 kW					
	n_2 [r/min]	c	n_2 [r/min]	c	n_2 [r/min]	c				
	247	2.8	301	2.5	444	1.7	51	5.639	GSS04-2M □□□090C32	802
	180	2.2	219	2.2	324	1.7	71	7.733	GSS04-2M □□□090C32	802
	154	1.9	188	1.8	277	1.6	81	9.042	GSS04-2M □□□090C32	802
	154	3.1	188	2.9	277	2.3	80	9.042	GSS05-2M □□□090C32	802
	141	1.7	171	1.7	253	1.6	92	9.897	GSS04-2M □□□090C32	802
	141	2.9	171	2.9	253	2.4	91	9.897	GSS05-2M □□□090C32	802
	129	1.6	157	1.6	231	1.5	101	10.827	GSS04-2M □□□090C32	802
	129	2.7	157	2.7	231	2.4	100	10.827	GSS05-2M □□□090C32	802
	113	1.5	137	1.4	202	1.3	111	12.400	GSS04-2M □□□090C32	802
	113	2.5	137	2.3	202	2.0	111	12.400	GSS05-2M □□□090C32	802
	101	1.3	123	1.3	181	1.3	129	13.810	GSS04-2M □□□090C32	802
	101	2.1	123	2.1	181	2.1	129	13.810	GSS05-2M □□□090C32	802
	88	1.3	107	1.2	158	1.1	142	15.869	GSS04-2M □□□090C32	802
	88	2.1	107	2.0	158	1.7	143	15.869	GSS05-2M □□□090C32	802
	80	1.2	98	1.1	144	1.0	156	17.360	GSS04-2M □□□090C32	802
	80	2.0	98	1.9	144	1.6	157	17.360	GSS05-2M □□□090C32	802
	68	0.9	83	0.9			167	20.417	GSS04-2M □□□090C32	802
	68	1.5	83	1.4	123	1.2	168	20.417	GSS05-2M □□□090C32	802
	63	0.9	77	0.9	113	0.9	198	22.143	GSS04-2M □□□090C32	802
	63	1.7	77	1.6	113	1.4	200	22.143	GSS05-2M □□□090C32	802
	56	0.8					207	24.800	GSS04-2M □□□090C32	802
	56	1.3	68	1.3	101	1.1	209	24.800	GSS05-2M □□□090C32	802
	51	1.5	63	1.4	92	1.2	246	27.125	GSS05-2M □□□090C32	802
	51	2.9	63	2.7	92	2.4	241	27.125	GSS06-2M □□□090C32	802
	44	1.1	53	1.1	79	0.9	268	31.738	GSS05-2M □□□090C32	802
	44	2.3	53	2.1	79	1.7	266	31.738	GSS06-2M □□□090C32	802
	40	1.1	48	1.1	71	1.0	321	35.306	GSS05-2M □□□090C32	802
	40	2.3	48	2.3	71	2.0	315	35.306	GSS06-2M □□□090C32	802
	36	1.0	43	0.9	64	0.8	326	39.200	GSS05-2M □□□090C32	802
	36	1.9	43	1.8	64	1.6	326	39.200	GSS06-2M □□□090C32	802
	32	0.9	39	0.9	57	0.9	400	43.917	GSS05-2M □□□090C32	802
	32	1.8	39	1.8	57	1.7	391	43.917	GSS06-2M □□□090C32	802
	32	2.8	39	2.8	58	2.8	386	43.271	GSS07-2M □□□090C32	802
	28	0.9					417	50.000	GSS05-2M □□□090C32	802
	28	1.7	34	1.6	50	1.4	414	50.000	GSS06-2M □□□090C32	802
	28	2.9	34	2.8	50	2.3	419	50.000	GSS07-2M □□□090C32	802
	26	1.6	31	1.5	46	1.3	452	54.250	GSS06-2M □□□090C32	802
	23	1.4	28	1.4	41	1.2	506	61.250	GSS06-2M □□□090C32	802
	20	1.2	24	1.2	36	1.1	584	70.611	GSS06-2M □□□090C32	802
	20	2.1	24	2.1	36	2.0	595	70.611	GSS07-2M □□□090C32	802
	18	1.1	21	1.1	31	1.0	652	79.722	GSS06-2M □□□090C32	802

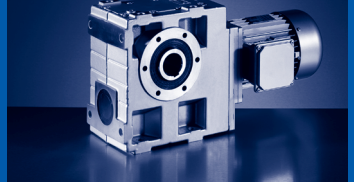

50 Hz: P_N=1.5 kW
60 Hz: P_N=1.8 kW
87 Hz: P_N=2.7 kW

n_N	1410 r/min		1710 r/min		2520 r/min		M_2 [Nm]	i		
f_N	50 Hz		60 Hz		87 Hz					
P_N	1.5 kW		1.8 kW		2.7 kW					
	n_2 [r/min]	c	n_2 [r/min]	c	n_2 [r/min]	c				
	18	1.9	21	1.8	31	1.8	667	79.722	GSS07-2M □□□090C32	802
	16	1.0	19	1.0	29	1.0	721	87.833	GSS06-2M □□□090C32	802
	16	1.7	20	1.7	29	1.7	726	86.542	GSS07-2M □□□090C32	802
	14	0.9	17	0.9	25	0.9	803	99.167	GSS06-2M □□□090C32	802
	14	1.5	17	1.5	26	1.5	813	97.708	GSS07-2M □□□090C32	802
	12	1.3	15	1.3	22	1.3	949	113.667	GSS07-2M □□□090C32	802
	11	1.2	13	1.2	20	1.2	1006	126.531	GSS07-3M □□□090C32	810
	11	1.2	13	1.2	20	1.2	1058	128.333	GSS07-2M □□□090C32	802
	10	1.1	12	1.1	18	1.1	1147	137.950	GSS07-2M □□□090C32	802
	9.8	1.1	12	1.1	18	1.1	1119	142.857	GSS07-3M □□□090C32	810
	9	1.0	11	1.0	16	1.0	1227	155.000	GSS07-3M □□□090C32	810
	9	1.0	11	1.0	16	1.0	1274	155.750	GSS07-2M □□□090C32	802
	8	0.9	9.7	0.9	14	0.9	1360	175.000	GSS07-3M □□□090C32	810
	8	0.9	9.7	0.9	14	0.9	1433	174.375	GSS07-2M □□□090C32	802

50 Hz: P_N=2.2 kW
60 Hz: P_N=2.6 kW

n_N	2730 r/min		3330 r/min				M_2 [Nm]	i		
f_N	50 Hz		60 Hz							
P_N	2.2 kW		2.6 kW							
	n_2 [r/min]	c	n_2 [r/min]	c						
	484	1.9	591	1.4			38	5.639	GSS04-2M □□□090C31	802
	353	2.0	431	1.6			53	7.733	GSS04-2M □□□090C31	802
	353	3.2	431	2.8			53	7.733	GSS05-2M □□□090C31	802
	302	1.9	368	1.7			61	9.042	GSS04-2M □□□090C31	802
	302	2.7	368	2.1			60	9.042	GSS05-2M □□□090C31	802
	276	2.1	337	1.7			68	9.897	GSS04-2M □□□090C31	802
	276	2.9	337	2.6			68	9.897	GSS05-2M □□□090C31	802
	252	2.0	308	1.7			75	10.827	GSS04-2M □□□090C31	802
	252	2.9	308	2.5			74	10.827	GSS05-2M □□□090C31	802
	220	1.6	269	1.5			84	12.400	GSS04-2M □□□090C31	802
	220	2.6	269	2.2			83	12.400	GSS05-2M □□□090C31	802
	198	1.7	241	1.6			96	13.810	GSS04-2M □□□090C31	802
	198	2.7	241	2.3			95	13.810	GSS05-2M □□□090C31	802
	172	1.4	210	1.3			108	15.869	GSS04-2M □□□090C31	802
	172	2.2	210	2.1			107	15.869	GSS05-2M □□□090C31	802
	157	1.3	192	1.2			118	17.360	GSS04-2M □□□090C31	802
	157	2.1	192	1.9			117	17.360	GSS05-2M □□□090C31	802
	134	0.9	163	0.9			126	20.417	GSS04-2M □□□090C31	802
	134	1.4	163	1.2			123	20.417	GSS05-2M □□□090C31	802
	123	1.1	150	1.0			150	22.143	GSS04-2M □□□090C31	802
	123	1.8	150	1.7			150	22.143	GSS05-2M □□□090C31	802
	123	3.2	150	2.8			149	22.143	GSS06-2M □□□090C31	802
	110	0.9					157	24.800	GSS04-2M □□□090C31	802
	110	1.4	134	1.3			155	24.800	GSS05-2M □□□090C31	802
	101	1.0	123	0.9			184	27.125	GSS04-2M □□□090C31	802
	101	1.5	123	1.4			184	27.125	GSS05-2M □□□090C31	802
	101	3.0	123	2.6			183	27.125	GSS06-2M □□□090C31	802
	86	1.2	105	1.1			200	31.738	GSS05-2M □□□090C31	802
	86	2.0	105	1.8			203	31.738	GSS06-2M □□□090C31	802
	77	1.3	94	1.2			240	35.306	GSS05-2M □□□090C31	802
	77	2.6	94	2.4			238	35.306	GSS06-2M □□□090C31	802
	70	1.0	85	1.0			243	39.200	GSS05-2M □□□090C31	802
	70	1.9	85	1.7			248	39.200	GSS06-2M □□□090C31	802
	62	1.1	76	1.0			300	43.917	GSS05-2M □□□090C31	802
	62	2.2	76	2.1			296	43.917	GSS06-2M □□□090C31	802
	55	0.9	67	0.8			311	50.000	GSS05-2M □□□090C31	802
	55	1.7	67	1.6			315	50.000	GSS06-2M □□□090C31	802
	55	2.7	67	2.4			318	50.000	GSS07-2M □□□090C31	802
	50	0.8					345	54.250	GSS05-2M □□□090C31	802
	50	1.7	61	1.6			345	54.250	GSS06-2M □□□090C31	802
	45	1.5	54	1.4			386	61.250	GSS06-2M □□□090C31	802

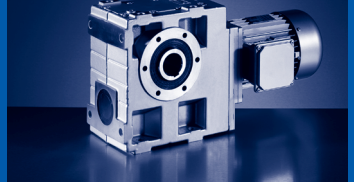

50 Hz: P_N=2.2 kW
60 Hz: P_N=2.6 kW

n_N	2730 r/min		3330 r/min				M_2 [Nm]	i		
f_N	50 Hz		60 Hz							
P_N	2.2 kW		2.6 kW							
	n_2 [r/min]	c	n_2 [r/min]	c						
	39	1.4	47	1.3			447	70.611	GSS06-2M □□□090C31	802
	39	2.5	47	2.2			452	70.611	GSS07-2M □□□090C31	802
	34	1.3	42	1.2			500	79.722	GSS06-2M □□□090C31	802
	34	2.3	42	2.1			507	79.722	GSS07-2M □□□090C31	802
	32	2.2	39	2.1			554	86.542	GSS07-2M □□□090C31	802
	31	1.2	38	1.1			555	87.833	GSS06-2M □□□090C31	802
	28	1.1	34	1.0			620	99.167	GSS06-2M □□□090C31	802
	28	2.0	34	1.9			621	97.708	GSS07-2M □□□090C31	802
	24	1.0	29	1.0			714	113.667	GSS06-2M □□□090C31	802
	24	1.7	29	1.7			727	113.667	GSS07-2M □□□090C31	802
	22	1.0	26	0.9			757	126.531	GSS06-3M □□□090C31	810
	22	1.6	26	1.6			771	126.531	GSS07-3M □□□090C31	810
	21	0.9	26	0.9			797	128.333	GSS06-2M □□□090C31	802
	21	1.5	26	1.5			814	128.333	GSS07-2M □□□090C31	802
	20	0.8	24	0.8			861	137.950	GSS06-2M □□□090C31	802
	20	1.4	24	1.4			879	137.950	GSS07-2M □□□090C31	802
	19	0.9	23	0.8			843	142.857	GSS06-3M □□□090C31	810
	19	1.4	23	1.4			864	142.857	GSS07-3M □□□090C31	810
	18	1.3	21	1.3			984	155.750	GSS07-2M □□□090C31	802
	18	1.3	22	1.3			940	155.000	GSS07-3M □□□090C31	810
	16	1.1	19	1.1			1104	174.375	GSS07-2M □□□090C31	802
	16	1.2	19	1.2			1053	175.000	GSS07-3M □□□090C31	810
	14	1.0	17	1.0			1235	196.875	GSS07-2M □□□090C31	802
	14	1.0	17	1.0			1216	201.746	GSS07-3M □□□090C31	810
	12	0.9	15	0.9			1357	227.778	GSS07-3M □□□090C31	810
	11	0.9	14	0.8			1481	247.139	GSS07-3M □□□090C31	810

50 Hz: P_N=2.2 kW
60 Hz: P_N=2.6 kW
87 Hz: P_N=3.9 kW

n_N	1440 r/min		1740 r/min		2550 r/min		M_2 [Nm]	i		
f_N	50 Hz		60 Hz		87 Hz					
P_N	2.2 kW		2.6 kW		3.9 kW					
	n_2 [r/min]	c	n_2 [r/min]	c	n_2 [r/min]	c				
	255	3.0	309	2.6	452	2.0	73	5.639	GSS05-2M □□□100C12	802
	186	2.6	225	2.4	330	1.8	101	7.733	GSS05-2M □□□100C12	802
	159	2.2	192	2.0	282	1.6	115	9.042	GSS05-2M □□□100C12	802
	146	2.1	176	2.1	258	1.7	131	9.897	GSS05-2M □□□100C12	802
	133	1.9	161	1.9	236	1.7	143	10.827	GSS05-2M □□□100C12	802
	116	1.7	140	1.6	206	1.4	159	12.400	GSS05-2M □□□100C12	802
	116	3.2	140	2.8	206	2.2	158	12.400	GSS06-2M □□□100C12	802
	104	1.5	126	1.5	185	1.5	184	13.810	GSS05-2M □□□100C12	802
	101	2.8	122	2.8	179	2.6	189	14.286	GSS06-2M □□□100C12	802
	91	1.5	110	1.4	161	1.2	204	15.869	GSS05-2M □□□100C12	802
	91	2.9	110	2.6	161	2.0	203	15.869	GSS06-2M □□□100C12	802
	83	1.4	100	1.3	147	1.1	224	17.360	GSS05-2M □□□100C12	802
	83	2.8	100	2.6	147	2.0	222	17.360	GSS06-2M □□□100C12	802
	71	1.1	85	1.0	125	0.9	240	20.417	GSS05-2M □□□100C12	802
	71	2.0	85	1.7	125	1.3	244	20.417	GSS06-2M □□□100C12	802
	65	1.2	79	1.1	115	1.0	286	22.143	GSS05-2M □□□100C12	802
	65	2.4	79	2.2	115	1.8	282	22.143	GSS06-2M □□□100C12	802
	58	0.9	70	0.9			298	24.800	GSS05-2M □□□100C12	802
	58	1.9	70	1.7	103	1.3	298	24.800	GSS06-2M □□□100C12	802
	53	1.0	64	1.0	94	0.9	351	27.125	GSS05-2M □□□100C12	802
	53	2.1	64	1.9	94	1.7	346	27.125	GSS06-2M □□□100C12	802
	47	2.8	56	2.4	82	1.8	376	31.000	GSS07-2M □□□100C12	802
	45	0.8					383	31.738	GSS05-2M □□□100C12	802
	45	1.6	55	1.5	80	1.2	381	31.738	GSS06-2M □□□100C12	802
	41	1.6	49	1.6	72	1.4	450	35.306	GSS06-2M □□□100C12	802
	41	2.7	49	2.7	72	2.4	451	35.306	GSS07-2M □□□100C12	802
	37	1.4	44	1.3	65	1.1	466	39.200	GSS06-2M □□□100C12	802
	37	2.5	44	2.2	65	1.7	472	39.200	GSS07-2M □□□100C12	802
	33	1.3	40	1.3	58	1.2	558	43.917	GSS06-2M □□□100C12	802
	33	2.2	40	2.2	59	2.2	552	43.271	GSS07-2M □□□100C12	802
	29	1.2	35	1.1	51	1.0	592	50.000	GSS06-2M □□□100C12	802
	29	2.1	35	2.0	51	1.6	601	50.000	GSS07-2M □□□100C12	802
	27	1.1	32	1.1	47	0.9	646	54.250	GSS06-2M □□□100C12	802
	27	1.9	32	1.9	47	1.6	657	54.250	GSS07-2M □□□100C12	802
	24	1.0	28	1.0	42	0.8	722	61.250	GSS06-2M □□□100C12	802
	24	1.7	28	1.7	42	1.5	736	61.250	GSS07-2M □□□100C12	802
	20	0.9	25	0.9			834	70.611	GSS06-2M □□□100C12	802
	20	1.5	25	1.5	36	1.4	851	70.611	GSS07-2M □□□100C12	802
	18	1.3	22	1.3	32	1.3	954	79.722	GSS07-2M □□□100C12	802
	17	1.2	20	1.2	30	1.2	1038	86.542	GSS07-2M □□□100C12	802
	15	1.1	18	1.1	26	1.1	1161	97.708	GSS07-2M □□□100C12	802

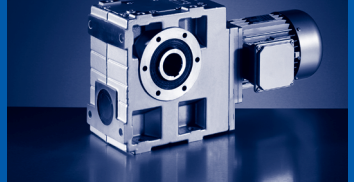

50 Hz: P_N=2.2 kW
60 Hz: P_N=2.6 kW
87 Hz: P_N=3.9 kW

n_N	1440 r/min		1740 r/min		2550 r/min		M_2 [Nm]	i		
f_N	50 Hz		60 Hz		87 Hz					
P_N	2.2 kW		2.6 kW		3.9 kW					
	n_2 [r/min]	c	n_2 [r/min]	c	n_2 [r/min]	c				
	13	0.9	15	0.9	22	0.9	1354	113.667	GSS07-2M □□□100C12	802
	11	0.8	14	0.8	20	0.8	1509	128.333	GSS07-2M □□□100C12	802
	11	0.9	14	0.9	20	0.9	1436	126.531	GSS07-3M □□□100C12	810

50 Hz: P_N=3.0 kW
60 Hz: P_N=3.6 kW

n_N	2890 r/min		3490 r/min				M_2 [Nm]	i		
f_N	50 Hz		60 Hz							
P_N	3.0 kW		3.6 kW							
	n_2 [r/min]	c	n_2 [r/min]	c						
	513	2.7	619	2.4			49	5.639	GSS05-2M □□□100C31	802
	374	2.5	451	2.2			68	7.733	GSS05-2M □□□100C31	802
	320	2.1	386	1.6			77	9.042	GSS05-2M □□□100C31	802
	320	3.2	386	2.8			79	9.042	GSS06-2M □□□100C31	802
	292	2.3	353	2.0			88	9.897	GSS05-2M □□□100C31	802
	267	2.2	322	2.0			96	10.827	GSS05-2M □□□100C31	802
	233	2.0	282	1.7			107	12.400	GSS05-2M □□□100C31	802
	233	2.9	282	2.5			108	12.400	GSS06-2M □□□100C31	802
	209	2.1	253	1.8			124	13.810	GSS05-2M □□□100C31	802
	182	1.7	220	1.6			138	15.869	GSS05-2M □□□100C31	802
	182	2.7	220	2.4			139	15.869	GSS06-2M □□□100C31	802
	167	1.6	201	1.5			151	17.360	GSS05-2M □□□100C31	802
	167	2.6	201	2.3			152	17.360	GSS06-2M □□□100C31	802
	142	1.1	171	0.9			159	20.417	GSS05-2M □□□100C31	802
	142	1.8	171	1.6			166	20.417	GSS06-2M □□□100C31	802
	131	1.4	158	1.3			194	22.143	GSS05-2M □□□100C31	802
	131	2.5	158	2.2			194	22.143	GSS06-2M □□□100C31	802
	117	1.1	141	1.0			200	24.800	GSS05-2M □□□100C31	802
	117	1.7	141	1.5			205	24.800	GSS06-2M □□□100C31	802
	107	1.2	129	1.1			238	27.125	GSS05-2M □□□100C31	802
	107	2.3	129	2.0			237	27.125	GSS06-2M □□□100C31	802
	93	2.4	113	2.2			258	31.000	GSS07-2M □□□100C31	802
	91	0.9	110	0.9			258	31.738	GSS05-2M □□□100C31	802
	91	1.6	110	1.4			262	31.738	GSS06-2M □□□100C31	802
	82	2.0	99	1.9			309	35.306	GSS06-2M □□□100C31	802
	82	3.3	99	2.8			308	35.306	GSS07-2M □□□100C31	802
	74	1.5	89	1.3			321	39.200	GSS06-2M □□□100C31	802
	74	2.3	89	2.0			324	39.200	GSS07-2M □□□100C31	802
	67	3.1	81	2.7			376	43.271	GSS07-2M □□□100C31	802
	66	1.7	80	1.6			383	43.917	GSS06-2M □□□100C31	802
	58	1.3	70	1.2			408	50.000	GSS06-2M □□□100C31	802
	58	2.1	70	1.9			413	50.000	GSS07-2M □□□100C31	802
	53	1.3	64	1.2			446	54.250	GSS06-2M □□□100C31	802
	53	2.1	64	1.8			451	54.250	GSS07-2M □□□100C31	802
	47	1.2	57	1.1			499	61.250	GSS06-2M □□□100C31	802
	47	2.0	57	1.8			505	61.250	GSS07-2M □□□100C31	802
	41	1.1	49	1.0			578	70.611	GSS06-2M □□□100C31	802
	41	2.0	49	1.7			587	70.611	GSS07-2M □□□100C31	802
	36	1.0	44	0.9			647	79.722	GSS06-2M □□□100C31	802
	36	1.8	44	1.6			657	79.722	GSS07-2M □□□100C31	802
	33	1.0	40	0.9			717	87.833	GSS06-2M □□□100C31	802

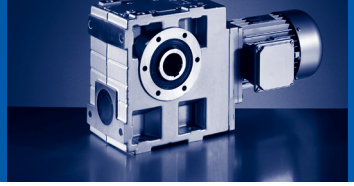

50 Hz: P_N=3.0 kW
60 Hz: P_N=3.6 kW

n_N	2890 r/min		3490 r/min				M_2 [Nm]	i		
f_N	50 Hz		60 Hz							
P_N	3.0 kW		3.6 kW							
	n_2 [r/min]	c	n_2 [r/min]	c						
	33	1.7	40	1.6			718	86.542	GSS07-2M □□□100C31	802
	30	1.6	36	1.5			804	97.708	GSS07-2M □□□100C31	802
	29	0.9	35	0.8			801	99.167	GSS06-2M □□□100C31	802
	25	1.3	31	1.3			940	113.667	GSS07-2M □□□100C31	802
	23	1.2	27	1.2			1053	128.333	GSS07-2M □□□100C31	802
	23	1.3	28	1.2			997	126.531	GSS07-3M □□□100C31	810
	21	1.1	25	1.1			1136	137.950	GSS07-2M □□□100C31	802
	20	1.1	24	1.1			1117	142.857	GSS07-3M □□□100C31	810
	19	1.0	22	1.0			1272	155.750	GSS07-2M □□□100C31	802
	19	1.0	23	1.0			1215	155.000	GSS07-3M □□□100C31	810
	17	0.9	20	0.9			1361	175.000	GSS07-3M □□□100C31	810

50 Hz: P_N=3.0 kW
60 Hz: P_N=3.6 kW
87 Hz: P_N=5.4 kW

n_N	1430 r/min		1730 r/min		2540 r/min		M_2 [Nm]	i		
f_N	50 Hz		60 Hz		87 Hz					
P_N	3.0 kW		3.6 kW		5.4 kW					
	n_2 [r/min]	c	n_2 [r/min]	c	n_2 [r/min]	c				
	254	2.2	307	1.9	450	1.5	102	5.639	GSS05-2M □□□100C32	802
	185	1.9	224	1.7	328	1.3	140	7.733	GSS05-2M □□□100C32	802
	158	1.6	191	1.5	281	1.2	159	9.042	GSS05-2M □□□100C32	802
	158	2.6	191	2.3	281	1.7	160	9.042	GSS06-2M □□□100C32	802
	145	1.5	175	1.5	257	1.2	181	9.897	GSS05-2M □□□100C32	802
	140	2.8	169	2.7	248	1.9	185	10.238	GSS06-2M □□□100C32	802
	132	1.4	160	1.4	235	1.2	198	10.827	GSS05-2M □□□100C32	802
	128	2.5	155	2.5	227	1.8	203	11.200	GSS06-2M □□□100C32	802
	115	1.3	140	1.2	205	1.0	220	12.400	GSS05-2M □□□100C32	802
	115	2.4	140	2.1	205	1.6	219	12.400	GSS06-2M □□□100C32	802
	104	1.1	125	1.1	184	1.1	254	13.810	GSS05-2M □□□100C32	802
	100	2.0	121	2.0	178	1.9	261	14.286	GSS06-2M □□□100C32	802
	90	1.1	109	1.0	160	0.9	282	15.869	GSS05-2M □□□100C32	802
	90	2.1	109	1.9	160	1.5	281	15.869	GSS06-2M □□□100C32	802
	82	1.0	100	1.0	146	0.8	309	17.360	GSS05-2M □□□100C32	802
	82	2.0	100	1.9	146	1.4	307	17.360	GSS06-2M □□□100C32	802
	82	3.2	100	2.8	146	2.1	306	17.360	GSS07-2M □□□100C32	802
	70	1.4	85	1.3	124	1.0	337	20.417	GSS06-2M □□□100C32	802
	65	0.9	78	0.8			395	22.143	GSS05-2M □□□100C32	802
	65	1.7	78	1.6	115	1.3	391	22.143	GSS06-2M □□□100C32	802
	65	3.0	78	2.7	115	2.0	389	22.143	GSS07-2M □□□100C32	802
	58	1.4	70	1.2	102	0.9	412	24.800	GSS06-2M □□□100C32	802
	53	1.5	64	1.4	94	1.2	478	27.125	GSS06-2M □□□100C32	802
	53	2.6	64	2.5	94	1.9	478	27.125	GSS07-2M □□□100C32	802
	46	2.0	56	1.8	82	1.3	521	31.000	GSS07-2M □□□100C32	802
	45	1.2	55	1.1	80	0.9	525	31.738	GSS06-2M □□□100C32	802
	41	1.2	49	1.2	72	1.0	621	35.306	GSS06-2M □□□100C32	802
	41	2.0	49	2.0	72	1.8	624	35.306	GSS07-2M □□□100C32	802
	37	1.0	44	0.9	65	0.8	643	39.200	GSS06-2M □□□100C32	802
	37	1.8	44	1.6	65	1.2	653	39.200	GSS07-2M □□□100C32	802
	33	0.9	39	0.9	58	0.9	770	43.917	GSS06-2M □□□100C32	802
	33	1.6	40	1.6	59	1.6	764	43.271	GSS07-2M □□□100C32	802
	29	0.9					817	50.000	GSS06-2M □□□100C32	802
	29	1.5	35	1.4	51	1.2	831	50.000	GSS07-2M □□□100C32	802
	26	0.8					891	54.250	GSS06-2M □□□100C32	802
	26	1.4	32	1.4	47	1.2	908	54.250	GSS07-2M □□□100C32	802
	23	1.2	28	1.2	42	1.1	1016	61.250	GSS07-2M □□□100C32	802
	20	1.1	25	1.1	36	1.0	1175	70.611	GSS07-2M □□□100C32	802
	18	1.0	22	0.9	32	0.9	1315	79.722	GSS07-2M □□□100C32	802
	17	0.9	20	0.9	29	0.9	1432	86.542	GSS07-2M □□□100C32	802

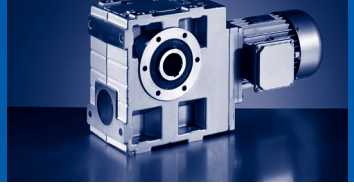

50 Hz: P_N=4.0 kW
60 Hz: P_N=4.8 kW

n_N	2840 r/min		3440 r/min				M_2 [Nm]	i		
f_N	50 Hz		60 Hz							
P_N	4.0 kW		4.8 kW							
	n_2 [r/min]	c	n_2 [r/min]	c						
	504	2.0	610	1.8			68	5.639	GSS05-2M □□□100C41	802
	487	2.7	590	2.1			70	5.833	GSS06-2M □□□100C41	802
	367	1.8	445	1.6			93	7.733	GSS05-2M □□□100C41	802
	355	2.7	430	2.3			96	8.000	GSS06-2M □□□100C41	802
	314	1.5	381	1.2			105	9.042	GSS05-2M □□□100C41	802
	314	2.3	381	2.0			108	9.042	GSS06-2M □□□100C41	802
	287	1.7	348	1.5			120	9.897	GSS05-2M □□□100C41	802
	277	2.6	336	2.2			124	10.238	GSS06-2M □□□100C41	802
	262	1.6	318	1.4			132	10.827	GSS05-2M □□□100C41	802
	254	2.5	307	2.2			136	11.200	GSS06-2M □□□100C41	802
	229	1.5	277	1.3			146	12.400	GSS05-2M □□□100C41	802
	229	2.1	277	1.9			148	12.400	GSS06-2M □□□100C41	802
	206	1.5	249	1.3			169	13.810	GSS05-2M □□□100C41	802
	199	2.6	241	2.0			174	14.286	GSS06-2M □□□100C41	802
	183	3.0	222	2.6			185	15.500	GSS07-2M □□□100C41	802
	179	1.3	217	1.2			188	15.869	GSS05-2M □□□100C41	802
	179	2.0	217	1.7			190	15.869	GSS06-2M □□□100C41	802
	164	1.2	198	1.1			206	17.360	GSS05-2M □□□100C41	802
	164	1.9	198	1.7			208	17.360	GSS06-2M □□□100C41	802
	164	2.9	198	2.5			207	17.360	GSS07-2M □□□100C41	802
	139	0.8					216	20.417	GSS05-2M □□□100C41	802
	139	1.3	169	1.2			227	20.417	GSS06-2M □□□100C41	802
	128	1.0	155	0.9			264	22.143	GSS05-2M □□□100C41	802
	128	1.8	155	1.6			265	22.143	GSS06-2M □□□100C41	802
	128	2.7	155	2.4			264	22.143	GSS07-2M □□□100C41	802
	115	1.3	139	1.1			280	24.800	GSS06-2M □□□100C41	802
	105	0.9	127	0.8			324	27.125	GSS05-2M □□□100C41	802
	105	1.7	127	1.5			324	27.125	GSS06-2M □□□100C41	802
	105	2.6	127	2.2			324	27.125	GSS07-2M □□□100C41	802
	92	1.8	111	1.6			352	31.000	GSS07-2M □□□100C41	802
	90	1.2	108	1.0			358	31.738	GSS06-2M □□□100C41	802
	80	1.5	97	1.4			421	35.306	GSS06-2M □□□100C41	802
	80	2.4	97	2.1			421	35.306	GSS07-2M □□□100C41	802
	72	1.1	88	1.0			437	39.200	GSS06-2M □□□100C41	802
	72	1.7	88	1.5			442	39.200	GSS07-2M □□□100C41	802
	66	2.3	80	2.0			515	43.271	GSS07-2M □□□100C41	802
	65	1.3	78	1.2			523	43.917	GSS06-2M □□□100C41	802
	57	1.0	69	0.9			556	50.000	GSS06-2M □□□100C41	802
	57	1.6	69	1.4			563	50.000	GSS07-2M □□□100C41	802
	52	1.0	63	0.9			607	54.250	GSS06-2M □□□100C41	802
	52	1.6	63	1.4			616	54.250	GSS07-2M □□□100C41	802

50 Hz: P_N=4.0 kW
60 Hz: P_N=4.8 kW

n_N	2840 r/min		3440 r/min				M_2 [Nm]	i		
f_N	50 Hz		60 Hz							
P_N	4.0 kW		4.8 kW							
	n_2 [r/min]	c	n_2 [r/min]	c						
	46	0.9	56	0.8			680	61.250	GSS06-2M □□□100C41	802
	46	1.5	56	1.3			689	61.250	GSS07-2M □□□100C41	802
	40	0.8					787	70.611	GSS06-2M □□□100C41	802
	40	1.4	49	1.3			801	70.611	GSS07-2M □□□100C41	802
	36	1.3	43	1.2			896	79.722	GSS07-2M □□□100C41	802
	33	1.3	40	1.2			980	86.542	GSS07-2M □□□100C41	802
	29	1.1	35	1.1			1096	97.708	GSS07-2M □□□100C41	802
	25	1.0	30	1.0			1281	113.667	GSS07-2M □□□100C41	802
	22	0.9	27	0.9			1434	128.333	GSS07-2M □□□100C41	802
	22	0.9	27	0.9			1358	126.531	GSS07-3M □□□100C41	810
	21	0.8	25	0.8			1547	137.950	GSS07-2M □□□100C41	802
	20	0.8	24	0.8			1521	142.857	GSS07-3M □□□100C41	810

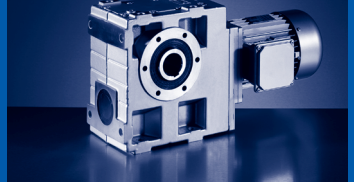

50 Hz: P_N=4.0 kW
60 Hz: P_N=4.8 kW
87 Hz: P_N=7.1 kW

n_N	1450 r/min		1750 r/min		2560 r/min		M_2 [Nm]	i		
f_N	50 Hz		60 Hz		87 Hz					
P_N	4.0 kW		4.8 kW		7.1 kW					
	n_2 [r/min]	c	n_2 [r/min]	c	n_2 [r/min]	c				
	249	2.5	300	2.2	439	1.6	139	5.833	GSS06-2M □□□112C22	802
	181	2.5	219	2.0	320	1.6	191	8.000	GSS06-2M □□□112C22	802
	160	2.0	194	1.7	283	1.3	212	9.042	GSS06-2M □□□112C22	802
	160	2.9	193	2.5	282	2.0	212	9.086	GSS07-2M □□□112C22	802
	142	2.1	171	2.1	250	1.4	246	10.238	GSS06-2M □□□112C22	802
	130	1.9	156	1.9	229	1.4	269	11.200	GSS06-2M □□□112C22	802
	130	3.2	156	2.8	229	2.1	268	11.200	GSS07-2M □□□112C22	802
	117	1.8	141	1.6	207	1.2	290	12.400	GSS06-2M □□□112C22	802
	115	2.7	139	2.3	203	1.8	294	12.594	GSS07-2M □□□112C22	802
	102	1.5	123	1.5	179	1.4	345	14.286	GSS06-2M □□□112C22	802
	102	2.6	123	2.6	179	2.0	344	14.286	GSS07-2M □□□112C22	802
	94	2.5	113	2.2	165	1.7	362	15.500	GSS07-2M □□□112C22	802
	91	1.6	110	1.5	161	1.1	371	15.869	GSS06-2M □□□112C22	802
	84	1.5	101	1.4	148	1.1	406	17.360	GSS06-2M □□□112C22	802
	84	2.5	101	2.1	148	1.6	406	17.360	GSS07-2M □□□112C22	802
	71	1.1	86	1.0			446	20.417	GSS06-2M □□□112C22	802
	71	1.7	85	1.5	125	1.2	453	20.517	GSS07-2M □□□112C22	802
	66	1.3	79	1.2	116	1.0	516	22.143	GSS06-2M □□□112C22	802
	66	2.3	79	2.0	116	1.5	516	22.143	GSS07-2M □□□112C22	802
	59	1.0	71	0.9			544	24.800	GSS06-2M □□□112C22	802
	58	1.6	70	1.4	102	1.1	560	25.188	GSS07-2M □□□112C22	802
	54	1.1	65	1.1	94	0.9	631	27.125	GSS06-2M □□□112C22	802
	54	2.0	65	1.9	94	1.4	633	27.125	GSS07-2M □□□112C22	802
	47	1.5	57	1.3	83	1.0	689	31.000	GSS07-2M □□□112C22	802
	46	0.9	55	0.8			693	31.738	GSS06-2M □□□112C22	802
	41	1.5	50	1.5	73	1.4	825	35.306	GSS07-2M □□□112C22	802
	37	1.4	45	1.2	65	0.9	863	39.200	GSS07-2M □□□112C22	802
	34	1.2	40	1.2	59	1.2	1009	43.271	GSS07-2M □□□112C22	802
	29	1.1	35	1.1	51	0.9	1098	50.000	GSS07-2M □□□112C22	802
	27	1.0	32	1.0	47	0.9	1198	54.250	GSS07-2M □□□112C22	802
	24	0.9	29	0.9	42	0.8	1341	61.250	GSS07-2M □□□112C22	802
	21	0.8	25	0.8			1549	70.611	GSS07-2M □□□112C22	802

50 Hz: P_N=5.5 kW
60 Hz: P_N=6.6 kW

n_N	2900 r/min		3500 r/min				M_2 [Nm]	i		
f_N	50 Hz		60 Hz							
P_N	5.5 kW		6.6 kW							
	n_2 [r/min]	c	n_2 [r/min]	c						
	497	2.0	600	1.5			95	5.833	GSS06-2M □□□112C31	802
	363	2.0	438	1.7			131	8.000	GSS06-2M □□□112C31	802
	357	3.0	431	2.7			133	8.125	GSS07-2M □□□112C31	802
	321	1.7	387	1.5			146	9.042	GSS06-2M □□□112C31	802
	319	2.8	385	2.5			146	9.086	GSS07-2M □□□112C31	802
	290	2.9	350	2.5			164	10.000	GSS07-2M □□□112C31	802
	283	1.9	342	1.7			168	10.238	GSS06-2M □□□112C31	802
	259	1.9	313	1.6			184	11.200	GSS06-2M □□□112C31	802
	259	2.8	313	2.4			184	11.200	GSS07-2M □□□112C31	802
	234	1.6	282	1.4			201	12.400	GSS06-2M □□□112C31	802
	230	2.4	278	2.2			203	12.594	GSS07-2M □□□112C31	802
	203	1.9	245	1.5			235	14.286	GSS06-2M □□□112C31	802
	203	2.6	245	2.3			236	14.286	GSS07-2M □□□112C31	802
	187	2.2	226	2.0			251	15.500	GSS07-2M □□□112C31	802
	183	1.5	221	1.3			257	15.869	GSS06-2M □□□112C31	802
	167	1.4	202	1.3			281	17.360	GSS06-2M □□□112C31	802
	167	2.1	202	1.9			281	17.360	GSS07-2M □□□112C31	802
	142	1.0	171	0.9			307	20.417	GSS06-2M □□□112C31	802
	141	1.6	171	1.5			312	20.517	GSS07-2M □□□112C31	802
	131	1.3	158	1.2			358	22.143	GSS06-2M □□□112C31	802
	131	2.0	158	1.8			358	22.143	GSS07-2M □□□112C31	802
	117	0.9	141	0.8			378	24.800	GSS06-2M □□□112C31	802
	115	1.4	139	1.3			387	25.188	GSS07-2M □□□112C31	802
	107	1.3	129	1.1			438	27.125	GSS06-2M □□□112C31	802
	107	1.9	129	1.7			439	27.125	GSS07-2M □□□112C31	802
	94	1.3	113	1.2			477	31.000	GSS07-2M □□□112C31	802
	91	0.9					483	31.738	GSS06-2M □□□112C31	802
	82	1.8	99	1.6			571	35.306	GSS07-2M □□□112C31	802
	74	0.8					591	39.200	GSS06-2M □□□112C31	802
	74	1.2	89	1.1			598	39.200	GSS07-2M □□□112C31	802
	67	1.7	81	1.5			698	43.271	GSS07-2M □□□112C31	802
	58	1.2	70	1.0			762	50.000	GSS07-2M □□□112C31	802
	54	1.2	65	1.0			833	54.250	GSS07-2M □□□112C31	802
	47	1.1	57	1.0			932	61.250	GSS07-2M □□□112C31	802
	41	1.1	50	0.9			1083	70.611	GSS07-2M □□□112C31	802
	36	1.0	44	0.9			1211	79.722	GSS07-2M □□□112C31	802
	34	0.9	40	0.9			1324	86.542	GSS07-2M □□□112C31	802
	30	0.9					1480	97.708	GSS07-2M □□□112C31	802

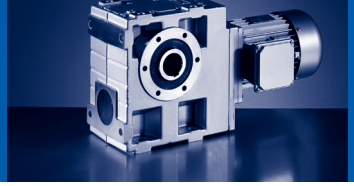

50 Hz: P_N=5.5 kW
60 Hz: P_N=6.6 kW
87 Hz: P_N=9.7 kW

n_N	1445 r/min		1745 r/min		2555 r/min		M_2 [Nm]	i		
f_N	50 Hz		60 Hz		87 Hz					
P_N	5.5 kW		6.6 kW		9.7 kW					
	n_2 [r/min]	c	n_2 [r/min]	c	n_2 [r/min]	c				
	248	1.8	299	1.6	438	1.2	193	5.833	GSS06-2M □□□112C32	802
	247	2.7	298	2.4	436	1.8	194	5.862	GSS07-2M □□□112C32	802
	181	1.8	218	1.4	319	1.1	265	8.000	GSS06-2M □□□112C32	802
	178	2.5	215	2.2	315	1.7	270	8.125	GSS07-2M □□□112C32	802
	160	1.4	193	1.2	283	1.0	294	9.042	GSS06-2M □□□112C32	802
	159	2.1	192	1.8	281	1.5	295	9.086	GSS07-2M □□□112C32	802
	145	2.4	175	2.1	256	1.6	333	10.000	GSS07-2M □□□112C32	802
	141	1.5	170	1.5	250	1.0	341	10.238	GSS06-2M □□□112C32	802
	129	1.4	156	1.4	228	1.0	374	11.200	GSS06-2M □□□112C32	802
	129	2.3	156	2.0	228	1.5	373	11.200	GSS07-2M □□□112C32	802
	117	1.3	141	1.1	206	0.9	402	12.400	GSS06-2M □□□112C32	802
	115	1.9	139	1.7	203	1.3	409	12.594	GSS07-2M □□□112C32	802
	101	1.1	122	1.1	179	1.0	479	14.286	GSS06-2M □□□112C32	802
	101	1.9	122	1.9	179	1.4	478	14.286	GSS07-2M □□□112C32	802
	93	1.8	113	1.6	165	1.2	504	15.500	GSS07-2M □□□112C32	802
	91	1.2	110	1.1	161	0.8	514	15.869	GSS06-2M □□□112C32	802
	83	1.1	101	1.0			563	17.360	GSS06-2M □□□112C32	802
	83	1.8	101	1.6	147	1.2	564	17.360	GSS07-2M □□□112C32	802
	70	1.2	85	1.1	125	0.9	629	20.517	GSS07-2M □□□112C32	802
	65	0.9	79	0.9			715	22.143	GSS06-2M □□□112C32	802
	65	1.7	79	1.5	115	1.1	717	22.143	GSS07-2M □□□112C32	802
	57	1.2	69	1.0			777	25.188	GSS07-2M □□□112C32	802
	53	0.8					874	27.125	GSS06-2M □□□112C32	802
	53	1.4	64	1.4	94	1.1	879	27.125	GSS07-2M □□□112C32	802
	47	1.1	56	1.0			955	31.000	GSS07-2M □□□112C32	802
	41	1.1	49	1.1	72	1.0	1143	35.306	GSS07-2M □□□112C32	802
	37	1.0	45	0.9			1195	39.200	GSS07-2M □□□112C32	802
	33	0.9	40	0.9	59	0.9	1397	43.271	GSS07-2M □□□112C32	802
	29	0.8					1520	50.000	GSS07-2M □□□112C32	802

50 Hz: P_N=7.5 kW
60 Hz: P_N=9.0 kW

n_N	2890 r/min		3490 r/min				M_2 [Nm]	i		
f_N	50 Hz		60 Hz							
P_N	7.5 kW		9.0 kW							
	n_2 [r/min]	c	n_2 [r/min]	c						
	495	1.5	598	1.1			131	5.833	GSS06-2M □□□112C41	802
	493	2.4	595	2.1			132	5.862	GSS07-2M □□□112C41	802
	361	1.5	436	1.2			180	8.000	GSS06-2M □□□112C41	802
	356	2.2	430	1.9			184	8.125	GSS07-2M □□□112C41	802
	320	1.3	386	1.1			201	9.042	GSS06-2M □□□112C41	802
	318	2.0	384	1.8			201	9.086	GSS07-2M □□□112C41	802
	289	2.1	349	1.8			227	10.000	GSS07-2M □□□112C41	802
	282	1.4	341	1.2			231	10.238	GSS06-2M □□□112C41	802
	258	1.4	312	1.2			253	11.200	GSS06-2M □□□112C41	802
	258	2.0	312	1.8			254	11.200	GSS07-2M □□□112C41	802
	233	1.2	282	1.0			276	12.400	GSS06-2M □□□112C41	802
	230	1.7	277	1.6			280	12.594	GSS07-2M □□□112C41	802
	202	1.4	244	1.1			324	14.286	GSS06-2M □□□112C41	802
	202	1.9	244	1.7			325	14.286	GSS07-2M □□□112C41	802
	187	1.6	225	1.4			345	15.500	GSS07-2M □□□112C41	802
	182	1.1	220	0.9			353	15.869	GSS06-2M □□□112C41	802
	167	1.1	201	0.9			386	17.360	GSS06-2M □□□112C41	802
	167	1.6	201	1.4			387	17.360	GSS07-2M □□□112C41	802
	141	1.2	170	1.1			428	20.517	GSS07-2M □□□112C41	802
	131	1.0	158	0.9			492	22.143	GSS06-2M □□□112C41	802
	131	1.5	158	1.3			493	22.143	GSS07-2M □□□112C41	802
	115	1.1	139	1.0			532	25.188	GSS07-2M □□□112C41	802
	107	0.9	129	0.8			602	27.125	GSS06-2M □□□112C41	802
	107	1.4	129	1.2			604	27.125	GSS07-2M □□□112C41	802
	93	1.0	113	0.9			655	31.000	GSS07-2M □□□112C41	802
	82	1.3	99	1.1			786	35.306	GSS07-2M □□□112C41	802
	74	0.9					822	39.200	GSS07-2M □□□112C41	802
	67	1.2	81	1.1			960	43.271	GSS07-2M □□□112C41	802
	58	0.8					1047	50.000	GSS07-2M □□□112C41	802
	53	0.8					1144	54.250	GSS07-2M □□□112C41	802
	47	0.8					1280	61.250	GSS07-2M □□□112C41	802

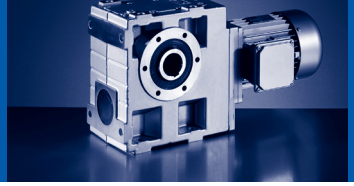

50 Hz: P_N=7.5 kW
60 Hz: P_N=9.0 kW
87 Hz: P_N=13.2 kW

n_N	1455 r/min		1755 r/min		2565 r/min		M_2 [Nm]	i		
f_N	50 Hz		60 Hz		87 Hz					
P_N	7.5 kW		9.0 kW		13.2 kW					
	n_2 [r/min]	c	n_2 [r/min]	c	n_2 [r/min]	c				
	248	2.0	299	1.8	438	1.3	264	5.862	GSS07-2M □□□132C22	802
	179	1.9	216	1.6	316	1.2	368	8.125	GSS07-2M □□□132C22	802
	160	1.6	193	1.4	282	1.1	402	9.086	GSS07-2M □□□132C22	802
	146	1.7	176	1.5	257	1.2	454	10.000	GSS07-2M □□□132C22	802
	130	1.7	157	1.5	229	1.1	508	11.200	GSS07-2M □□□132C22	802
	116	1.4	139	1.3	204	0.9	557	12.594	GSS07-2M □□□132C22	802
	102	1.6	123	1.4	180	1.1	650	14.286	GSS07-2M □□□132C22	802
	94	1.4	113	1.2	166	0.9	686	15.500	GSS07-2M □□□132C22	802
	84	1.3	101	1.2	148	0.9	768	17.360	GSS07-2M □□□132C22	802
	71	0.9					854	20.517	GSS07-2M □□□132C22	802
	66	1.2	79	1.1	116	0.8	976	22.143	GSS07-2M □□□132C22	802
	58	0.9					1056	25.188	GSS07-2M □□□132C22	802
	54	1.1	65	1.0			1195	27.125	GSS07-2M □□□132C22	802
	47	0.8					1298	31.000	GSS07-2M □□□132C22	802

50 Hz: P_N=9.0 kW
60 Hz: P_N=11.0 kW

n_N	2890 r/min		3490 r/min				M_2 [Nm]	i		
f_N	50 Hz		60 Hz							
P_N	9.0 kW		11.0 kW							
	n_2 [r/min]	c	n_2 [r/min]	c						
	493	2.0	595	1.8			159	5.862	GSS07-2M □□□132C21	802
	356	1.9	430	1.6			221	8.125	GSS07-2M □□□132C21	802
	318	1.7	384	1.5			242	9.086	GSS07-2M □□□132C21	802
	289	1.7	349	1.5			273	10.000	GSS07-2M □□□132C21	802
	258	1.7	312	1.5			306	11.200	GSS07-2M □□□132C21	802
	230	1.5	277	1.3			337	12.594	GSS07-2M □□□132C21	802
	202	1.6	244	1.4			392	14.286	GSS07-2M □□□132C21	802
	187	1.3	225	1.2			415	15.500	GSS07-2M □□□132C21	802
	167	1.3	201	1.1			465	17.360	GSS07-2M □□□132C21	802
	141	1.0	170	0.9			515	20.517	GSS07-2M □□□132C21	802
	131	1.2	158	1.1			594	22.143	GSS07-2M □□□132C21	802
	115	0.9					639	25.188	GSS07-2M □□□132C21	802
	107	1.2	129	1.0			727	27.125	GSS07-2M □□□132C21	802
	93	0.8					787	31.000	GSS07-2M □□□132C21	802

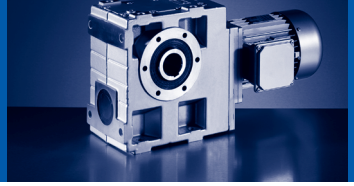

50 Hz: P_N=9.2 kW
60 Hz: P_N=11.0 kW
87 Hz: P_N=16.2 kW

n_N	1450 r/min		1750 r/min		2560 r/min		M_2 [Nm]	i		
f_N	50 Hz		60 Hz		87 Hz					
P_N	9.2 kW		11.0 kW		16.2 kW					
	n_2 [r/min]	c	n_2 [r/min]	c	n_2 [r/min]	c				
	247	1.6	299	1.4	437	1.1	327	5.862	GSS07-2M □□□132C32	802
	179	1.5	215	1.3	315	1.0	454	8.125	GSS07-2M □□□132C32	802
	160	1.3	193	1.1	282	0.9	496	9.086	GSS07-2M □□□132C32	802
	145	1.4	175	1.2	256	0.9	560	10.000	GSS07-2M □□□132C32	802
	130	1.4	156	1.2	229	0.9	628	11.200	GSS07-2M □□□132C32	802
	115	1.2	139	1.0			688	12.594	GSS07-2M □□□132C32	802
	102	1.3	123	1.1	179	0.9	802	14.286	GSS07-2M □□□132C32	802
	94	1.1	113	1.0			846	15.500	GSS07-2M □□□132C32	802
	84	1.1	101	0.9			947	17.360	GSS07-2M □□□132C32	802
	66	1.0	79	0.9			1204	22.143	GSS07-2M □□□132C32	802
	54	0.9	65	0.8			1474	27.125	GSS07-2M □□□132C32	802

50 Hz: P_N=11.0 kW
60 Hz: P_N=13.2 kW
87 Hz: P_N=19.3 kW

n_N	1460 r/min		1760 r/min		2565 r/min		M_2 [Nm]	i		
f_N	50 Hz		60 Hz		87 Hz					
P_N	11.0 kW		13.2 kW		19.3 kW					
	n_2 [r/min]	c	n_2 [r/min]	c	n_2 [r/min]	c				
	249	1.4	300	1.2	438	0.9	389	5.862	GSS07-2M □□□160C22	802
	180	1.3	217	1.1	316	0.8	541	8.125	GSS07-2M □□□160C22	802
	161	1.1	194	0.9			591	9.086	GSS07-2M □□□160C22	802
	146	1.2	176	1.0			667	10.000	GSS07-2M □□□160C22	802
	130	1.2	157	1.0			747	11.200	GSS07-2M □□□160C22	802
	116	1.0	140	0.9			819	12.594	GSS07-2M □□□160C22	802
	94	0.9	114	0.8			1007	15.500	GSS07-2M □□□160C22	802
	84	0.9					1127	17.360	GSS07-2M □□□160C22	802

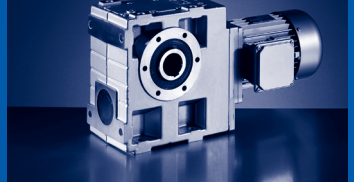

50 Hz: P_N=15.0 kW
60 Hz: P_N=18.0 kW
87 Hz: P_N=26.4 kW

n_N	1460 r/min		1760 r/min		2565 r/min		M_2 [Nm]	i		
f_N	50 Hz		60 Hz		87 Hz					
P_N	15.0 kW		18.0 kW		26.4 kW					
	n_2 [r/min]	c	n_2 [r/min]	c	n_2 [r/min]	c				
	249	1.0	300	0.9			533	5.862	GSS07-2M □□□160C32	802
	180	0.9	217	0.8			740	8.125	GSS07-2M □□□160C32	802
	146	0.9					912	10.000	GSS07-2M □□□160C32	802
	130	0.9					1023	11.200	GSS07-2M □□□160C32	802

50 Hz: P_N=0.75 kW
60 Hz: P_N=0.92 kW
87 Hz: P_N=1.35 kW

n_N	1410 r/min		1710 r/min		2520 r/min		M_2 [Nm]	i		
f_N	50 Hz		60 Hz		87 Hz					
P_N	0.75 kW		0.92 kW		1.35 kW					
	n_2 [r/min]	c	n_2 [r/min]	c	n_2 [r/min]	c				
	250	4.2	303	4.2	447	3.4	25	5.639	GSS04-2M □□□080C32	818
	182	4.2	221	4.2	326	3.5	35	7.733	GSS04-2M □□□080C32	818
	156	3.8	189	3.6	279	3.1	39	9.042	GSS04-2M □□□080C32	818
	143	3.5	173	3.5	255	3.3	45	9.897	GSS04-2M □□□080C32	818
	130	3.2	158	3.2	233	3.1	49	10.827	GSS04-2M □□□080C32	818
	114	3.1	138	2.9	203	2.5	54	12.400	GSS04-2M □□□080C32	818
	102	2.5	124	2.5	183	2.5	63	13.810	GSS04-2M □□□080C32	818
	89	2.6	108	2.4	159	2.1	69	15.869	GSS04-2M □□□080C32	818
	81	2.3	99	2.3	145	2.0	76	17.360	GSS04-2M □□□080C32	818
	69	1.9	84	1.7	123	1.5	82	20.417	GSS04-2M □□□080C32	818
	64	1.8	77	1.8	114	1.7	97	22.143	GSS04-2M □□□080C32	818
	57	1.7	69	1.6	102	1.4	101	24.800	GSS04-2M □□□080C32	818
	52	1.5	63	1.5	93	1.5	118	27.125	GSS04-2M □□□080C32	818
	52	2.9	63	2.8	93	2.4	120	27.125	GSS05-2M □□□080C32	818
	44	1.4	54	1.3	79	1.2	129	31.738	GSS04-2M □□□080C32	818
	44	2.3	54	2.2	79	1.9	131	31.738	GSS05-2M □□□080C32	818
	41	1.2	50	1.2	74	1.2	148	34.100	GSS04-2M □□□080C32	818
	40	2.3	48	2.3	71	2.0	157	35.306	GSS05-2M □□□080C32	818
	36	1.2	44	1.1	64	1.0	155	39.200	GSS04-2M □□□080C32	818
	36	2.0	44	1.9	64	1.6	159	39.200	GSS05-2M □□□080C32	818
	32	1.0	39	0.9	57	0.9	190	43.917	GSS04-2M □□□080C32	818
	32	1.8	39	1.8	57	1.8	196	43.917	GSS05-2M □□□080C32	818
	32	2.9	39	2.9	57	2.9	191	43.917	GSS06-2M □□□080C32	818
	28	0.9	34	0.9	50	0.9	196	50.000	GSS04-2M □□□080C32	818
	28	1.7	34	1.6	50	1.4	204	50.000	GSS05-2M □□□080C32	818
	26	0.8	32	0.8	47	0.8	217	54.250	GSS04-2M □□□080C32	818
	26	1.6	32	1.5	47	1.3	226	54.250	GSS05-2M □□□080C32	818
	23	1.4	28	1.4	41	1.2	251	61.250	GSS05-2M □□□080C32	818
	20	1.2	24	1.2	36	1.1	294	70.611	GSS05-2M □□□080C32	818
	20	2.5	24	2.5	36	2.2	285	70.611	GSS06-2M □□□080C32	818
	18	1.1	21	1.1	32	1.0	328	79.722	GSS05-2M □□□080C32	818
	18	2.2	21	2.2	32	2.0	318	79.722	GSS06-2M □□□080C32	818
	16	1.0	20	1.0	29	1.0	365	87.833	GSS05-2M □□□080C32	818
	16	2.0	20	2.0	29	1.9	352	87.833	GSS06-2M □□□080C32	818
	14	0.9	17	0.9	25	0.9	405	99.167	GSS05-2M □□□080C32	818
	14	1.8	17	1.8	25	1.8	393	99.167	GSS06-2M □□□080C32	818
	12	1.6	15	1.6	22	1.5	452	113.667	GSS06-2M □□□080C32	818
	12	2.7	15	2.6	22	2.6	462	113.667	GSS07-2M □□□080C32	818
	11	1.4	13	1.4	20	1.4	503	128.333	GSS06-2M □□□080C32	818
	11	1.5	14	1.5	20	1.5	478	126.531	GSS06-3M □□□080C32	826
	11	2.4	13	2.4	20	2.3	516	128.333	GSS07-2M □□□080C32	818

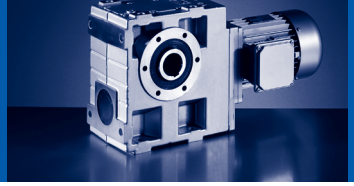

50 Hz: P_N=0.75 kW
60 Hz: P_N=0.92 kW
87 Hz: P_N=1.35 kW

n_N	1410 r/min		1710 r/min		2520 r/min		M_2 [Nm]	i		
f_N	50 Hz		60 Hz		87 Hz					
P_N	0.75 kW		0.92 kW		1.35 kW					
	n_2 [r/min]	c	n_2 [r/min]	c	n_2 [r/min]	c				
	11	2.5	14	2.5	20	2.5	490	126.531	GSS07-3M □□□080C32	826
	10	1.3	12	1.3	18	1.3	544	137.950	GSS06-2M □□□080C32	818
	10	2.2	12	2.2	18	2.2	560	137.950	GSS07-2M □□□080C32	818
	9.9	1.4	12	1.3	18	1.3	530	142.857	GSS06-3M □□□080C32	826
	9.9	2.3	12	2.2	18	2.2	546	142.857	GSS07-3M □□□080C32	826
	9.1	1.2	11	1.2	16	1.2	579	155.000	GSS06-3M □□□080C32	826
	9.1	1.2	11	1.2	16	1.2	605	155.750	GSS06-2M □□□080C32	818
	9.1	2.0	11	2.0	16	1.9	623	155.750	GSS07-2M □□□080C32	818
	9.1	2.1	11	2.1	16	2.0	599	155.000	GSS07-3M □□□080C32	826
	8.1	1.1	9.8	1.1	14	1.1	645	175.000	GSS06-3M □□□080C32	826
	8.1	1.1	9.8	1.1	15	1.0	679	174.375	GSS06-2M □□□080C32	818
	8.1	1.8	9.8	1.7	15	1.7	701	174.375	GSS07-2M □□□080C32	818
	8.1	1.9	9.8	1.8	14	1.8	664	175.000	GSS07-3M □□□080C32	826
	7.2	1.0	8.8	1.0	13	1.0	722	194.857	GSS06-3M □□□080C32	826
	7.2	1.0	8.7	0.9	13	0.9	755	196.875	GSS06-2M □□□080C32	818
	7.2	1.6	8.7	1.6	13	1.5	782	196.875	GSS07-2M □□□080C32	818
	7	1.6	8.5	1.6	13	1.6	768	201.746	GSS07-3M □□□080C32	826
	6.4	0.9	7.8	0.9	12	0.9	803	220.000	GSS06-3M □□□080C32	826
	6.2	1.5	7.5	1.4	11	1.4	855	227.778	GSS07-3M □□□080C32	826
	5.9	0.8	7.2	0.8			876	238.700	GSS06-3M □□□080C32	826
	5.7	1.3	6.9	1.3	10	1.3	935	247.139	GSS07-3M □□□080C32	826
	5.1	1.2	6.1	1.2	9	1.2	1039	279.028	GSS07-3M □□□080C32	826
	4.4	1.0	5.3	1.0	7.8	1.0	1203	321.673	GSS07-3M □□□080C32	826
	3.9	0.9	4.7	0.9	6.9	0.9	1335	363.179	GSS07-3M □□□080C32	826
	3.6	0.9	4.3	0.9	6.4	0.8	1455	394.245	GSS07-3M □□□080C32	826

50 Hz: P_N=1.1 kW
60 Hz: P_N=1.3 kW
87 Hz: P_N=2.0 kW

n_N	1430 r/min		1730 r/min		2540 r/min		M_2 [Nm]	i		
f_N	50 Hz		60 Hz		87 Hz					
P_N	1.1 kW		1.3 kW		2.0 kW					
	n_2 [r/min]	c	n_2 [r/min]	c	n_2 [r/min]	c				
	254	4.0	307	3.5	450	2.4	36	5.639	GSS04-2M □□□090C12	818
	185	3.1	224	3.0	328	2.4	51	7.733	GSS04-2M □□□090C12	818
	158	2.6	191	2.5	281	2.2	58	9.042	GSS04-2M □□□090C12	818
	145	2.4	175	2.4	257	2.3	65	9.897	GSS04-2M □□□090C12	818
	132	2.2	160	2.2	235	2.1	72	10.827	GSS04-2M □□□090C12	818
	115	2.1	140	2.0	205	1.8	79	12.400	GSS04-2M □□□090C12	818
	104	1.8	125	1.8	184	1.8	92	13.810	GSS04-2M □□□090C12	818
	104	3.0	125	3.0	184	2.9	91	13.810	GSS05-2M □□□090C12	818
	90	1.8	109	1.7	160	1.5	101	15.869	GSS04-2M □□□090C12	818
	90	2.9	109	2.7	160	2.4	101	15.869	GSS05-2M □□□090C12	818
	82	1.6	100	1.6	146	1.4	111	17.360	GSS04-2M □□□090C12	818
	82	2.8	100	2.6	146	2.3	111	17.360	GSS05-2M □□□090C12	818
	70	1.3	85	1.2	124	1.0	119	20.417	GSS04-2M □□□090C12	818
	70	2.1	85	2.0	124	1.7	119	20.417	GSS05-2M □□□090C12	818
	65	1.3	78	1.3	115	1.2	141	22.143	GSS04-2M □□□090C12	818
	65	2.3	78	2.2	115	1.9	142	22.143	GSS05-2M □□□090C12	818
	58	1.2	70	1.1	102	0.9	147	24.800	GSS04-2M □□□090C12	818
	58	1.9	70	1.7	102	1.5	149	24.800	GSS05-2M □□□090C12	818
	53	1.1	64	1.0	94	1.0	172	27.125	GSS04-2M □□□090C12	818
	53	2.0	64	1.9	94	1.7	175	27.125	GSS05-2M □□□090C12	818
	45	1.0	55	0.9	80	0.8	187	31.738	GSS04-2M □□□090C12	818
	45	1.6	55	1.5	80	1.3	191	31.738	GSS05-2M □□□090C12	818
	45	3.2	55	3.0	80	2.4	188	31.738	GSS06-2M □□□090C12	818
	41	1.6	49	1.6	72	1.4	229	35.306	GSS05-2M □□□090C12	818
	41	3.2	49	3.1	72	2.8	223	35.306	GSS06-2M □□□090C12	818
	37	0.8					225	39.200	GSS04-2M □□□090C12	818
	37	1.4	44	1.3	65	1.1	232	39.200	GSS05-2M □□□090C12	818
	37	2.7	44	2.5	65	2.2	231	39.200	GSS06-2M □□□090C12	818
	33	1.3	39	1.3	58	1.2	285	43.917	GSS05-2M □□□090C12	818
	33	2.6	39	2.5	58	2.4	277	43.917	GSS06-2M □□□090C12	818
	29	1.2	35	1.1	51	1.0	297	50.000	GSS05-2M □□□090C12	818
	29	2.3	35	2.2	51	1.9	294	50.000	GSS06-2M □□□090C12	818
	26	1.1	32	1.1	47	0.9	328	54.250	GSS05-2M □□□090C12	818
	26	2.2	32	2.1	47	1.8	321	54.250	GSS06-2M □□□090C12	818
	23	1.0	28	1.0	42	0.9	365	61.250	GSS05-2M □□□090C12	818
	23	2.0	28	1.9	42	1.7	359	61.250	GSS06-2M □□□090C12	818
	20	0.8	25	0.8			427	70.611	GSS05-2M □□□090C12	818
	20	1.7	25	1.7	36	1.5	416	70.611	GSS06-2M □□□090C12	818
	20	2.9	25	2.9	36	2.8	421	70.611	GSS07-2M □□□090C12	818
	18	1.5	22	1.5	32	1.4	464	79.722	GSS06-2M □□□090C12	818
	18	2.6	22	2.6	32	2.5	473	79.722	GSS07-2M □□□090C12	818

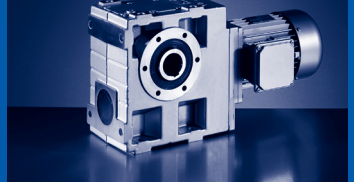

50 Hz: P_N=1.1 kW
60 Hz: P_N=1.3 kW
87 Hz: P_N=2.0 kW

n_N	1430 r/min		1730 r/min		2540 r/min		M_2 [Nm]	i		
f_N	50 Hz		60 Hz		87 Hz					
P_N	1.1 kW		1.3 kW		2.0 kW					
	n_2 [r/min]	c	n_2 [r/min]	c	n_2 [r/min]	c				
	17	2.4	20	2.4	29	2.3	515	86.542	GSS07-2M □□□090C12	818
	16	1.4	20	1.4	29	1.3	513	87.833	GSS06-2M □□□090C12	818
	15	2.1	18	2.1	26	2.1	577	97.708	GSS07-2M □□□090C12	818
	14	1.3	17	1.2	26	1.2	572	99.167	GSS06-2M □□□090C12	818
	13	1.1	15	1.1	22	1.1	657	113.667	GSS06-2M □□□090C12	818
	13	1.8	15	1.8	22	1.8	674	113.667	GSS07-2M □□□090C12	818
	11	1.0	14	1.0	20	1.0	731	128.333	GSS06-2M □□□090C12	818
	11	1.0	14	1.0	20	1.0	695	126.531	GSS06-3M □□□090C12	826
	11	1.7	14	1.6	20	1.6	752	128.333	GSS07-2M □□□090C12	818
	11	1.7	14	1.7	20	1.7	715	126.531	GSS07-3M □□□090C12	826
	10	0.9	13	0.9	18	0.9	791	137.950	GSS06-2M □□□090C12	818
	10	0.9	12	0.9	18	0.9	771	142.857	GSS06-3M □□□090C12	826
	10	1.5	13	1.5	18	1.5	816	137.950	GSS07-2M □□□090C12	818
	10	1.6	12	1.5	18	1.5	796	142.857	GSS07-3M □□□090C12	826
	9.2	0.8	11	0.8			880	155.750	GSS06-2M □□□090C12	818
	9.2	0.9	11	0.9	16	0.8	842	155.000	GSS06-3M □□□090C12	826
	9.2	1.4	11	1.4	16	1.3	907	155.750	GSS07-2M □□□090C12	818
	9.2	1.4	11	1.4	16	1.4	874	155.000	GSS07-3M □□□090C12	826
	8.2	1.2	9.9	1.2	15	1.2	1021	174.375	GSS07-2M □□□090C12	818
	8.2	1.3	9.9	1.3	15	1.3	968	175.000	GSS07-3M □□□090C12	826
	7.3	1.1	8.8	1.1	13	1.1	1137	196.875	GSS07-2M □□□090C12	818
	7.1	1.1	8.6	1.1	13	1.1	1117	201.746	GSS07-3M □□□090C12	826
	6.3	1.0	7.6	1.0	11	1.0	1244	227.778	GSS07-3M □□□090C12	826
	5.8	0.9	7	0.9	10	0.9	1359	247.139	GSS07-3M □□□090C12	826
	5.1	0.8	6.2	0.8	9.1	0.8	1510	279.028	GSS07-3M □□□090C12	826

50 Hz: P_N=1.5 kW
60 Hz: P_N=1.8 kW
87 Hz: P_N=2.7 kW

n_N	1435 r/min		1735 r/min		2545 r/min		M_2 [Nm]	i		
f_N	50 Hz		60 Hz		87 Hz					
P_N	1.5 kW		1.8 kW		2.7 kW					
	n_2 [r/min]	c	n_2 [r/min]	c	n_2 [r/min]	c				
	255	2.9	308	2.6	451	1.7	50	5.639	GSS04-2M □□□090C32	818
	186	2.3	224	2.2	329	1.8	69	7.733	GSS04-2M □□□090C32	818
	159	1.9	192	1.8	282	1.6	79	9.042	GSS04-2M □□□090C32	818
	159	3.1	192	3.0	282	2.4	78	9.042	GSS05-2M □□□090C32	818
	145	1.8	175	1.8	257	1.7	89	9.897	GSS04-2M □□□090C32	818
	145	3.0	175	3.0	257	2.5	89	9.897	GSS05-2M □□□090C32	818
	133	1.6	160	1.6	235	1.6	98	10.827	GSS04-2M □□□090C32	818
	133	2.8	160	2.8	235	2.4	97	10.827	GSS05-2M □□□090C32	818
	116	1.6	140	1.5	205	1.3	108	12.400	GSS04-2M □□□090C32	818
	116	2.5	140	2.4	205	2.1	108	12.400	GSS05-2M □□□090C32	818
	104	1.3	126	1.3	184	1.3	126	13.810	GSS04-2M □□□090C32	818
	104	2.2	126	2.2	184	2.1	125	13.810	GSS05-2M □□□090C32	818
	90	1.3	109	1.2	160	1.1	138	15.869	GSS04-2M □□□090C32	818
	90	2.1	109	2.0	160	1.8	139	15.869	GSS05-2M □□□090C32	818
	83	1.2	100	1.2	147	1.0	151	17.360	GSS04-2M □□□090C32	818
	83	2.0	100	1.9	147	1.7	152	17.360	GSS05-2M □□□090C32	818
	70	0.9	85	0.9			163	20.417	GSS04-2M □□□090C32	818
	70	1.5	85	1.4	125	1.3	163	20.417	GSS05-2M □□□090C32	818
	65	0.9	78	0.9	115	0.9	192	22.143	GSS04-2M □□□090C32	818
	65	1.7	78	1.6	115	1.4	195	22.143	GSS05-2M □□□090C32	818
	58	0.9					201	24.800	GSS04-2M □□□090C32	818
	58	1.4	70	1.3	103	1.1	203	24.800	GSS05-2M □□□090C32	818
	53	1.5	64	1.4	94	1.2	239	27.125	GSS05-2M □□□090C32	818
	53	3.0	64	2.8	94	2.5	234	27.125	GSS06-2M □□□090C32	818
	45	1.2	55	1.1	80	1.0	261	31.738	GSS05-2M □□□090C32	818
	45	2.3	55	2.2	80	1.7	258	31.738	GSS06-2M □□□090C32	818
	41	1.2	49	1.2	72	1.0	312	35.306	GSS05-2M □□□090C32	818
	41	2.3	49	2.3	72	2.1	306	35.306	GSS06-2M □□□090C32	818
	37	1.0	44	1.0	65	0.8	317	39.200	GSS05-2M □□□090C32	818
	37	2.0	44	1.9	65	1.6	316	39.200	GSS06-2M □□□090C32	818
	33	0.9	40	0.9	58	0.9	389	43.917	GSS05-2M □□□090C32	818
	33	1.9	40	1.9	58	1.8	379	43.917	GSS06-2M □□□090C32	818
	33	2.9	40	2.9	59	2.9	375	43.271	GSS07-2M □□□090C32	818
	29	0.9	35	0.8			405	50.000	GSS05-2M □□□090C32	818
	29	1.7	35	1.6	51	1.4	403	50.000	GSS06-2M □□□090C32	818
	29	3.0	35	2.9	51	2.3	407	50.000	GSS07-2M □□□090C32	818
	27	0.8					447	54.250	GSS05-2M □□□090C32	818
	27	1.6	32	1.6	47	1.3	440	54.250	GSS06-2M □□□090C32	818
	23	1.5	28	1.4	42	1.2	491	61.250	GSS06-2M □□□090C32	818
	20	1.3	25	1.3	36	1.1	568	70.611	GSS06-2M □□□090C32	818
	20	2.1	25	2.1	36	2.0	578	70.611	GSS07-2M □□□090C32	818

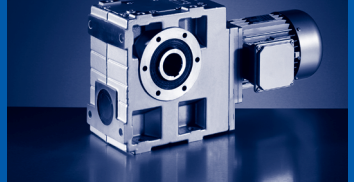

50 Hz: P_N=1.5 kW
60 Hz: P_N=1.8 kW
87 Hz: P_N=2.7 kW

n_N	1435 r/min		1735 r/min		2545 r/min		M_2 [Nm]	i		
f_N	50 Hz		60 Hz		87 Hz					
P_N	1.5 kW		1.8 kW		2.7 kW					
	n_2 [r/min]	c	n_2 [r/min]	c	n_2 [r/min]	c				
	18	1.1	22	1.1	32	1.0	634	79.722	GSS06-2M □□□090C32	818
	18	1.9	22	1.9	32	1.9	648	79.722	GSS07-2M □□□090C32	818
	17	1.8	20	1.7	29	1.7	706	86.542	GSS07-2M □□□090C32	818
	16	1.0	20	1.0	29	1.0	700	87.833	GSS06-2M □□□090C32	818
	15	0.9	18	0.9	26	0.9	780	99.167	GSS06-2M □□□090C32	818
	15	1.6	18	1.6	26	1.5	790	97.708	GSS07-2M □□□090C32	818
	13	0.8					896	113.667	GSS06-2M □□□090C32	818
	13	1.4	15	1.3	22	1.3	922	113.667	GSS07-2M □□□090C32	818
	11	1.2	14	1.2	20	1.2	1028	128.333	GSS07-2M □□□090C32	818
	11	1.3	14	1.3	20	1.3	978	126.531	GSS07-3M □□□090C32	826
	10	1.1	13	1.1	18	1.1	1114	137.950	GSS07-2M □□□090C32	818
	10	1.2	12	1.1	18	1.1	1088	142.857	GSS07-3M □□□090C32	826
	9.3	1.1	11	1.0	16	1.0	1193	155.000	GSS07-3M □□□090C32	826
	9.2	1.0	11	1.0	16	1.0	1238	155.750	GSS07-2M □□□090C32	818
	8.2	0.9	10	0.9	15	0.9	1393	174.375	GSS07-2M □□□090C32	818
	8.2	1.0	9.9	0.9	15	0.9	1321	175.000	GSS07-3M □□□090C32	826
	7.3	0.8	8.8	0.8			1551	196.875	GSS07-2M □□□090C32	818
	7.1	0.8	8.6	0.8			1524	201.746	GSS07-3M □□□090C32	826

50 Hz: P_N=2.2 kW
60 Hz: P_N=2.6 kW
87 Hz: P_N=3.9 kW

n_N	1445 r/min		1745 r/min		2555 r/min		M_2 [Nm]	i		
f_N	50 Hz		60 Hz		87 Hz					
P_N	2.2 kW		2.6 kW		3.9 kW					
	n_2 [r/min]	c	n_2 [r/min]	c	n_2 [r/min]	c				
	256	3.0	310	2.6	453	2.0	73	5.639	GSS05-2M □□□100C12	818
	187	2.6	226	2.4	330	1.8	101	7.733	GSS05-2M □□□100C12	818
	160	2.2	193	2.0	283	1.6	115	9.042	GSS05-2M □□□100C12	818
	146	2.1	176	2.1	258	1.7	130	9.897	GSS05-2M □□□100C12	818
	134	1.9	161	1.9	236	1.7	143	10.827	GSS05-2M □□□100C12	818
	117	1.7	141	1.6	206	1.4	159	12.400	GSS05-2M □□□100C12	818
	117	3.2	141	2.8	206	2.2	158	12.400	GSS06-2M □□□100C12	818
	105	1.5	126	1.5	185	1.5	183	13.810	GSS05-2M □□□100C12	818
	101	2.8	122	2.8	179	2.6	188	14.286	GSS06-2M □□□100C12	818
	91	1.5	110	1.4	161	1.2	204	15.869	GSS05-2M □□□100C12	818
	91	2.9	110	2.7	161	2.0	202	15.869	GSS06-2M □□□100C12	818
	83	1.4	101	1.3	147	1.2	223	17.360	GSS05-2M □□□100C12	818
	83	2.8	101	2.6	147	2.0	221	17.360	GSS06-2M □□□100C12	818
	71	1.1	86	1.0	125	0.9	239	20.417	GSS05-2M □□□100C12	818
	71	2.0	86	1.7	125	1.3	243	20.417	GSS06-2M □□□100C12	818
	65	1.2	79	1.1	115	1.0	285	22.143	GSS05-2M □□□100C12	818
	65	2.4	79	2.2	115	1.8	281	22.143	GSS06-2M □□□100C12	818
	58	0.9	70	0.9			297	24.800	GSS05-2M □□□100C12	818
	58	1.9	70	1.7	103	1.3	297	24.800	GSS06-2M □□□100C12	818
	53	1.0	64	1.0	94	0.9	350	27.125	GSS05-2M □□□100C12	818
	53	2.1	64	1.9	94	1.7	345	27.125	GSS06-2M □□□100C12	818
	47	2.8	56	2.4	82	1.8	375	31.000	GSS07-2M □□□100C12	818
	46	0.8					381	31.738	GSS05-2M □□□100C12	818
	46	1.6	55	1.5	81	1.2	379	31.738	GSS06-2M □□□100C12	818
	41	1.6	49	1.6	72	1.4	449	35.306	GSS06-2M □□□100C12	818
	41	2.7	49	2.7	72	2.5	449	35.306	GSS07-2M □□□100C12	818
	37	1.4	45	1.3	65	1.1	464	39.200	GSS06-2M □□□100C12	818
	37	2.5	45	2.2	65	1.7	470	39.200	GSS07-2M □□□100C12	818
	33	1.3	40	1.3	58	1.2	556	43.917	GSS06-2M □□□100C12	818
	33	2.2	40	2.2	59	2.2	550	43.271	GSS07-2M □□□100C12	818
	29	1.2	35	1.1	51	1.0	590	50.000	GSS06-2M □□□100C12	818
	29	2.1	35	2.0	51	1.6	599	50.000	GSS07-2M □□□100C12	818
	27	1.1	32	1.1	47	0.9	644	54.250	GSS06-2M □□□100C12	818
	27	1.9	32	1.9	47	1.6	655	54.250	GSS07-2M □□□100C12	818
	24	1.0	29	1.0	42	0.8	719	61.250	GSS06-2M □□□100C12	818
	24	1.7	29	1.7	42	1.5	734	61.250	GSS07-2M □□□100C12	818
	21	0.9	25	0.9			831	70.611	GSS06-2M □□□100C12	818
	21	1.5	25	1.5	36	1.4	848	70.611	GSS07-2M □□□100C12	818
	18	1.3	22	1.3	32	1.3	950	79.722	GSS07-2M □□□100C12	818
	17	1.2	20	1.2	30	1.2	1035	86.542	GSS07-2M □□□100C12	818
	15	1.1	18	1.1	26	1.1	1157	97.708	GSS07-2M □□□100C12	818

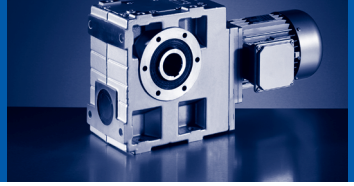

50 Hz: P_N=2.2 kW
60 Hz: P_N=2.6 kW
87 Hz: P_N=3.9 kW

n_N	1445 r/min		1745 r/min		2555 r/min		M_2 [Nm]	i		
f_N	50 Hz		60 Hz		87 Hz					
P_N	2.2 kW		2.6 kW		3.9 kW					
	n_2 [r/min]	c	n_2 [r/min]	c	n_2 [r/min]	c				
	13	0.9	15	0.9	23	0.9	1350	113.667	GSS07-2M □□□100C12	818
	11	0.8	14	0.8	20	0.8	1504	128.333	GSS07-2M □□□100C12	818
	11	0.9	14	0.9	20	0.9	1431	126.531	GSS07-3M □□□100C12	826

50 Hz: P_N=3.0 kW
60 Hz: P_N=3.6 kW
87 Hz: P_N=5.4 kW

n_N	1445 r/min		1745 r/min		2555 r/min		M_2 [Nm]	i		
f_N	50 Hz		60 Hz		87 Hz					
P_N	3.0 kW		3.6 kW		5.4 kW					
	n_2 [r/min]	c	n_2 [r/min]	c	n_2 [r/min]	c				
	256	2.2	310	1.9	453	1.5	101	5.639	GSS05-2M □□□100C32	818
	187	1.9	226	1.8	330	1.4	139	7.733	GSS05-2M □□□100C32	818
	160	1.6	193	1.5	283	1.2	158	9.042	GSS05-2M □□□100C32	818
	160	2.6	193	2.3	283	1.7	158	9.042	GSS06-2M □□□100C32	818
	146	1.5	176	1.5	258	1.3	179	9.897	GSS05-2M □□□100C32	818
	141	2.8	170	2.7	250	1.9	183	10.238	GSS06-2M □□□100C32	818
	134	1.4	161	1.4	236	1.2	196	10.827	GSS05-2M □□□100C32	818
	129	2.6	156	2.6	228	1.9	201	11.200	GSS06-2M □□□100C32	818
	117	1.3	141	1.2	206	1.1	217	12.400	GSS05-2M □□□100C32	818
	117	2.4	141	2.1	206	1.6	217	12.400	GSS06-2M □□□100C32	818
	105	1.1	126	1.1	185	1.1	251	13.810	GSS05-2M □□□100C32	818
	101	2.0	122	2.0	179	1.9	259	14.286	GSS06-2M □□□100C32	818
	91	1.1	110	1.0	161	0.9	279	15.869	GSS05-2M □□□100C32	818
	91	2.2	110	2.0	161	1.5	278	15.869	GSS06-2M □□□100C32	818
	83	1.0	101	1.0	147	0.8	306	17.360	GSS05-2M □□□100C32	818
	83	2.0	101	1.9	147	1.4	304	17.360	GSS06-2M □□□100C32	818
	71	1.5	86	1.3	125	1.0	334	20.417	GSS06-2M □□□100C32	818
	65	0.9	79	0.8			390	22.143	GSS05-2M □□□100C32	818
	65	1.7	79	1.6	115	1.4	387	22.143	GSS06-2M □□□100C32	818
	65	3.1	79	2.7	115	2.0	385	22.143	GSS07-2M □□□100C32	818
	58	1.4	70	1.2	103	0.9	408	24.800	GSS06-2M □□□100C32	818
	53	1.5	64	1.4	94	1.2	473	27.125	GSS06-2M □□□100C32	818
	53	2.6	64	2.6	94	1.9	473	27.125	GSS07-2M □□□100C32	818
	47	2.0	56	1.8	82	1.3	515	31.000	GSS07-2M □□□100C32	818
	46	1.2	55	1.1	81	0.9	520	31.738	GSS06-2M □□□100C32	818
	41	1.2	49	1.2	72	1.0	615	35.306	GSS06-2M □□□100C32	818
	41	2.0	49	2.0	72	1.8	617	35.306	GSS07-2M □□□100C32	818
	37	1.0	45	0.9	65	0.8	636	39.200	GSS06-2M □□□100C32	818
	37	1.8	45	1.6	65	1.2	646	39.200	GSS07-2M □□□100C32	818
	33	1.0	40	0.9	58	0.9	762	43.917	GSS06-2M □□□100C32	818
	33	1.6	40	1.6	59	1.6	756	43.271	GSS07-2M □□□100C32	818
	29	0.9	35	0.8			808	50.000	GSS06-2M □□□100C32	818
	29	1.5	35	1.4	51	1.2	822	50.000	GSS07-2M □□□100C32	818
	27	0.8					882	54.250	GSS06-2M □□□100C32	818
	27	1.4	32	1.4	47	1.2	898	54.250	GSS07-2M □□□100C32	818
	24	1.2	29	1.2	42	1.1	1006	61.250	GSS07-2M □□□100C32	818
	21	1.1	25	1.1	36	1.0	1162	70.611	GSS07-2M □□□100C32	818
	18	1.0	22	1.0	32	0.9	1301	79.722	GSS07-2M □□□100C32	818
	17	0.9	20	0.9	30	0.9	1417	86.542	GSS07-2M □□□100C32	818

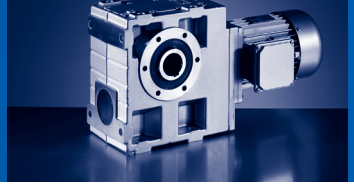

50 Hz: P_N=4.0 kW
60 Hz: P_N=4.8 kW
87 Hz: P_N=7.1 kW

n_N	1455 r/min		1755 r/min		2565 r/min		M_2 [Nm]	i		
f_N	50 Hz		60 Hz		87 Hz					
P_N	4.0 kW		4.8 kW		7.1 kW					
	n_2 [r/min]	c	n_2 [r/min]	c	n_2 [r/min]	c				
	249	2.5	301	2.2	440	1.6	138	5.833	GSS06-2M □□□112C22	818
	182	2.5	219	2.0	321	1.6	190	8.000	GSS06-2M □□□112C22	818
	161	2.0	194	1.7	284	1.3	211	9.042	GSS06-2M □□□112C22	818
	160	2.9	193	2.5	282	2.1	211	9.086	GSS07-2M □□□112C22	818
	142	2.1	171	2.1	251	1.5	245	10.238	GSS06-2M □□□112C22	818
	130	1.9	157	1.9	229	1.4	268	11.200	GSS06-2M □□□112C22	818
	130	3.2	157	2.8	229	2.1	267	11.200	GSS07-2M □□□112C22	818
	117	1.8	142	1.6	207	1.2	289	12.400	GSS06-2M □□□112C22	818
	116	2.7	139	2.3	204	1.8	293	12.594	GSS07-2M □□□112C22	818
	102	1.5	123	1.5	180	1.4	344	14.286	GSS06-2M □□□112C22	818
	102	2.6	123	2.6	180	2.0	343	14.286	GSS07-2M □□□112C22	818
	94	2.5	113	2.2	166	1.7	361	15.500	GSS07-2M □□□112C22	818
	92	1.6	111	1.5	162	1.1	370	15.869	GSS06-2M □□□112C22	818
	84	1.5	101	1.4	148	1.1	404	17.360	GSS06-2M □□□112C22	818
	84	2.5	101	2.2	148	1.6	404	17.360	GSS07-2M □□□112C22	818
	71	1.1	86	1.0			444	20.417	GSS06-2M □□□112C22	818
	71	1.7	86	1.5	125	1.2	452	20.517	GSS07-2M □□□112C22	818
	66	1.3	79	1.2	116	1.0	514	22.143	GSS06-2M □□□112C22	818
	66	2.3	79	2.0	116	1.5	514	22.143	GSS07-2M □□□112C22	818
	59	1.0	71	0.9			542	24.800	GSS06-2M □□□112C22	818
	58	1.6	70	1.4	102	1.1	558	25.188	GSS07-2M □□□112C22	818
	54	1.1	65	1.1	95	0.9	629	27.125	GSS06-2M □□□112C22	818
	54	2.0	65	1.9	95	1.5	631	27.125	GSS07-2M □□□112C22	818
	47	1.5	57	1.3	83	1.0	686	31.000	GSS07-2M □□□112C22	818
	46	0.9	55	0.8			691	31.738	GSS06-2M □□□112C22	818
	41	1.5	50	1.5	73	1.4	822	35.306	GSS07-2M □□□112C22	818
	37	1.4	45	1.2	65	0.9	860	39.200	GSS07-2M □□□112C22	818
	34	1.2	41	1.2	59	1.2	1005	43.271	GSS07-2M □□□112C22	818
	29	1.1	35	1.1	51	0.9	1094	50.000	GSS07-2M □□□112C22	818
	27	1.1	32	1.0	47	0.9	1194	54.250	GSS07-2M □□□112C22	818
	24	0.9	29	0.9	42	0.8	1337	61.250	GSS07-2M □□□112C22	818
	21	0.8	25	0.8			1544	70.611	GSS07-2M □□□112C22	818

50 Hz: P_N=5.5 kW
60 Hz: P_N=6.6 kW
87 Hz: P_N=9.7 kW

n_N	1470 r/min		1770 r/min		2580 r/min		M_2 [Nm]	i		
f_N	50 Hz		60 Hz		87 Hz					
P_N	5.5 kW		6.6 kW		9.7 kW					
	n_2 [r/min]	c	n_2 [r/min]	c	n_2 [r/min]	c				
	252	1.9	303	1.6	442	1.2	189	5.833	GSS06-2M□□□132C12	818
	251	2.8	302	2.4	440	1.9	190	5.862	GSS07-2M □□□132C12	818
	184	1.9	221	1.5	323	1.1	260	8.000	GSS06-2M□□□132C12	818
	181	2.5	218	2.2	318	1.7	265	8.125	GSS07-2M □□□132C12	818
	163	1.4	196	1.3	285	1.0	289	9.042	GSS06-2M□□□132C12	818
	162	2.1	195	1.9	284	1.5	290	9.086	GSS07-2M □□□132C12	818
	147	2.4	177	2.1	258	1.6	327	10.000	GSS07-2M □□□132C12	818
	144	1.6	173	1.5	252	1.1	335	10.238	GSS06-2M□□□132C12	818
	131	1.4	158	1.4	230	1.0	367	11.200	GSS06-2M□□□132C12	818
	131	2.3	158	2.0	230	1.6	367	11.200	GSS07-2M □□□132C12	818
	119	1.3	143	1.2	208	0.9	395	12.400	GSS06-2M□□□132C12	818
	117	2.0	141	1.7	205	1.3	402	12.594	GSS07-2M □□□132C12	818
	103	1.1	124	1.1	181	1.1	470	14.286	GSS06-2M□□□132C12	818
	103	2.2	124	1.9	181	1.5	469	14.286	GSS07-2M □□□132C12	818
	95	1.9	114	1.6	167	1.2	495	15.500	GSS07-2M □□□132C12	818
	93	1.2	112	1.1	163	0.8	506	15.869	GSS06-2M□□□132C12	818
	85	1.1	102	1.1	149	0.8	553	17.360	GSS06-2M□□□132C12	818
	85	1.8	102	1.6	149	1.2	554	17.360	GSS07-2M □□□132C12	818
	72	0.8					606	20.417	GSS06-2M□□□132C12	818
	72	1.2	86	1.1	126	0.9	618	20.517	GSS07-2M □□□132C12	818
	66	1.0	80	0.9			703	22.143	GSS06-2M□□□132C12	818
	66	1.7	80	1.5	117	1.1	705	22.143	GSS07-2M □□□132C12	818
	58	1.2	70	1.0			764	25.188	GSS07-2M □□□132C12	818
	54	0.8					859	27.125	GSS06-2M□□□132C12	818
	54	1.4	65	1.4	95	1.1	864	27.125	GSS07-2M □□□132C12	818
	47	1.1	57	1.0			939	31.000	GSS07-2M □□□132C12	818
	38	1.0	45	0.9			1175	39.200	GSS07-2M □□□132C12	818
	29	0.8	35	0.8			1494	50.000	GSS07-2M □□□132C12	818

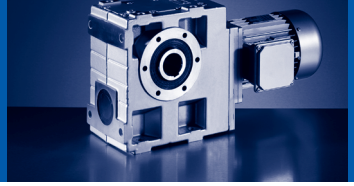

50 Hz: P_N=7.5 kW
60 Hz: P_N=9.0 kW
87 Hz: P_N=13.2 kW

n_N	1460 r/min		1760 r/min		2570 r/min		M_2 [Nm]	i		
f_N	50 Hz		60 Hz		87 Hz					
P_N	7.5 kW		9.0 kW		13.2 kW					
	n_2 [r/min]	c	n_2 [r/min]	c	n_2 [r/min]	c				
	250	1.4	302	1.2	441	0.9	261	5.833	GSS06-2M□□□132C22	818
	249	2.0	300	1.8	438	1.4	264	5.862	GSS07-2M □□□132C22	818
	183	1.4	220	1.1	321	0.8	360	8.000	GSS06-2M□□□132C22	818
	180	1.9	217	1.6	316	1.2	367	8.125	GSS07-2M □□□132C22	818
	162	1.1	195	0.9			398	9.042	GSS06-2M□□□132C22	818
	161	1.6	194	1.4	283	1.1	401	9.086	GSS07-2M □□□132C22	818
	146	1.8	176	1.5	257	1.2	452	10.000	GSS07-2M □□□132C22	818
	143	1.1	172	1.1			462	10.238	GSS06-2M□□□132C22	818
	130	1.0	157	1.0			506	11.200	GSS06-2M□□□132C22	818
	130	1.7	157	1.5	230	1.1	507	11.200	GSS07-2M □□□132C22	818
	118	1.0	142	0.8			545	12.400	GSS06-2M□□□132C22	818
	116	1.4	140	1.3	204	1.0	555	12.594	GSS07-2M □□□132C22	818
	102	0.8	123	0.8			648	14.286	GSS06-2M□□□132C22	818
	102	1.6	123	1.4	180	1.1	647	14.286	GSS07-2M □□□132C22	818
	94	1.4	114	1.2	166	0.9	683	15.500	GSS07-2M □□□132C22	818
	92	0.9					697	15.869	GSS06-2M□□□132C22	818
	84	0.8					762	17.360	GSS06-2M□□□132C22	818
	84	1.3	101	1.2	148	0.9	765	17.360	GSS07-2M □□□132C22	818
	71	0.9					851	20.517	GSS07-2M □□□132C22	818
	66	1.2	80	1.1	116	0.8	972	22.143	GSS07-2M □□□132C22	818
	58	0.9					1052	25.188	GSS07-2M □□□132C22	818
	54	1.1	65	1.0			1191	27.125	GSS07-2M □□□132C22	818
	47	0.8					1293	31.000	GSS07-2M □□□132C22	818

50 Hz: P_N=11.0 kW
60 Hz: P_N=13.2 kW
87 Hz: P_N=19.4 kW

n_N	1470 r/min		1770 r/min		2580 r/min		M_2 [Nm]	i		
f_N	50 Hz		60 Hz		87 Hz					
P_N	11.0 kW		13.2 kW		19.4 kW					
	n_2 [r/min]	c	n_2 [r/min]	c	n_2 [r/min]	c				
	251	1.4	302	1.2	440	0.9	386	5.862	GSS07-2M □□□160C22	818
	181	1.3	218	1.1	318	0.9	537	8.125	GSS07-2M □□□160C22	818
	162	1.1	195	0.9			587	9.086	GSS07-2M □□□160C22	818
	147	1.2	177	1.1			662	10.000	GSS07-2M □□□160C22	818
	131	1.2	158	1.0			742	11.200	GSS07-2M □□□160C22	818
	117	1.0	141	0.9			813	12.594	GSS07-2M □□□160C22	818
	95	0.9	114	0.8			1000	15.500	GSS07-2M □□□160C22	818
	85	0.9					1119	17.360	GSS07-2M □□□160C22	818

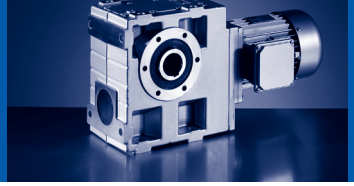

50 Hz: P_N=15.0 kW
60 Hz: P_N=18.0 kW
87 Hz: P_N=26.4 kW

n_N	1470 r/min		1770 r/min		2580 r/min		M_2 [Nm]	i		
f_N	50 Hz		60 Hz		87 Hz					
P_N	15.0 kW		18.0 kW		26.4 kW					
	n_2 [r/min]	c	n_2 [r/min]	c	n_2 [r/min]	c				
	251	1.0	302	0.9			529	5.862	GSS07-2M □□□160C32	818
	181	0.9	218	0.8			735	8.125	GSS07-2M □□□160C32	818
	147	0.9					906	10.000	GSS07-2M □□□160C32	818
	131	0.9					1015	11.200	GSS07-2M □□□160C32	818

GSS□□-2M H□R

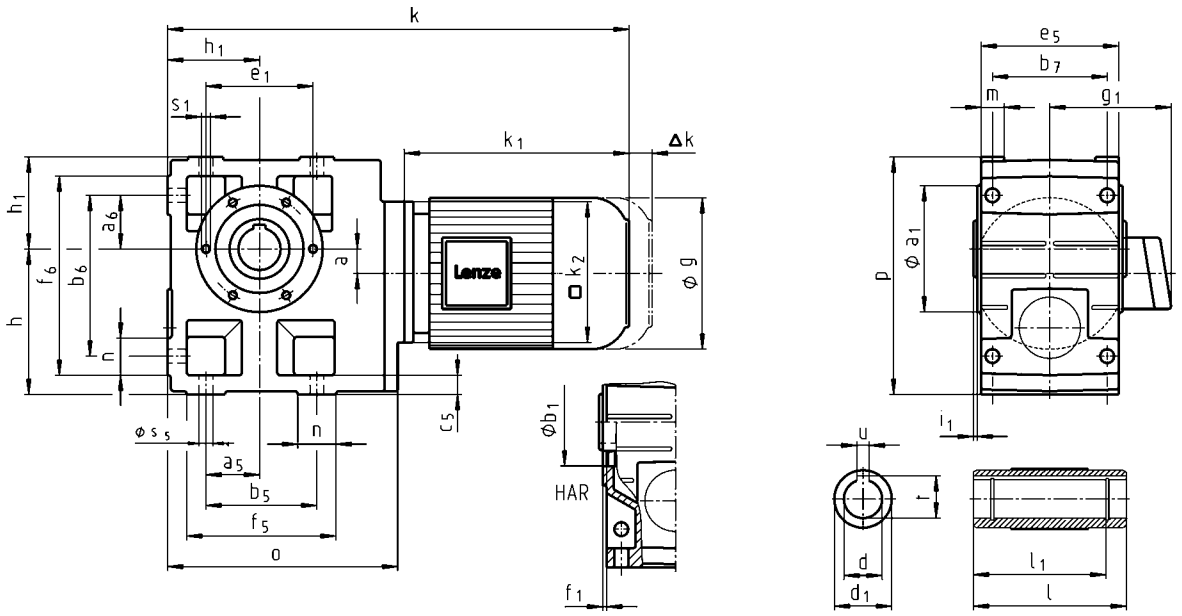

		063C11 063C12 063C31 063C32	063C42	071C11	071C13 071C31 071C32 071C33 071C42	080C11 080C13 080C31 080C32 080C33 080C42	090C11 090C31
g		123		139		156	176
g_1	MDEMAXX	100		109		141	146
	MDEMABR	107		118		132	137
k_1	MDEMAXX	187		207		224.5	274
k_2		120				145	180
Δ k	MDEMABR	40		52		73	68
	MDFMAXX	128					
	MDFMABR	170		165		183	181
		k					
GSS04		377		397		420	479
GSS05			399	419		441	501
GSS06			439		459	481	541
GSS07						524	584

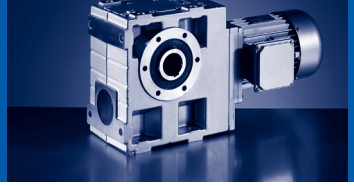

		090C32	100C12 100C31 100C32 100C41	112C22 112C31	112C32 112C41	132C12 132C21 132C22 132C32	160C22	160C32
g		176	194	218		258	310	
g_1	MDEMAXX	146	157	167		195	210	
	MDEMABR	137	147	158		187	210	
k_1	MDEMAXX	248	309	319	363	403	457.5	501.5
k_2		180		222		265	300	
Δ k	MDEMABR	68	76	90		109.5	105	
	MDFMAXX	128	109	102		115	149	
	MDFMABR	181	170	183		201.5	179	
		k						
GSS04		453						
GSS05		475	536					
GSS06		515	576	592	636			
GSS07		558	619	635	679	727	786	830

	a	h[1)]	h_1	o	p[1)]
GSS04	20	100	71	181	171
GSS05	23	125	80	212	205
GSS06	26	150	100	255	250
GSS07	33	190	120	305	310

	d	d_1	l[1)]	l_1	u	t	i_1	a_1	b_1	e_1	f_1	s_1
	H7				JS9	+0,2			H7			
GSS04	25 30	45 45	115 115	100 100	8 8	28.3 33.3	2.5 2.5	104	75	90	3	M6x12
GSS05	30 35	50 50	140 140	124 124	8 10	33.3 38.3	4 4	118	80	100	4	M8x15
GSS06	40 45	65 65	160 160	140 140	12 14	43.3 48.8	5 5	140	100	120	4	M10x16
GSS07	50 55	75 75	200 200	175 175	14 16	53.8 59.3	5 5	165	115	140	5	M12x18

	a_5	a_6	b_5	b_6	b_7	c_5	e_5	f_5	f_6	m	n	s_5
GSS04	45	45	90	119	85	14	100	112	141	20	22	9
GSS05	47.5	47.5	95	140	105	17	127	124	169	21	29	11
GSS06	60	60	120	170	120	20	145	156	206	23	36	14
GSS07	70	70	140	210	150	25	180	185	255	28	45	18

[1)] k_2 !

GSS□□-2M HAK

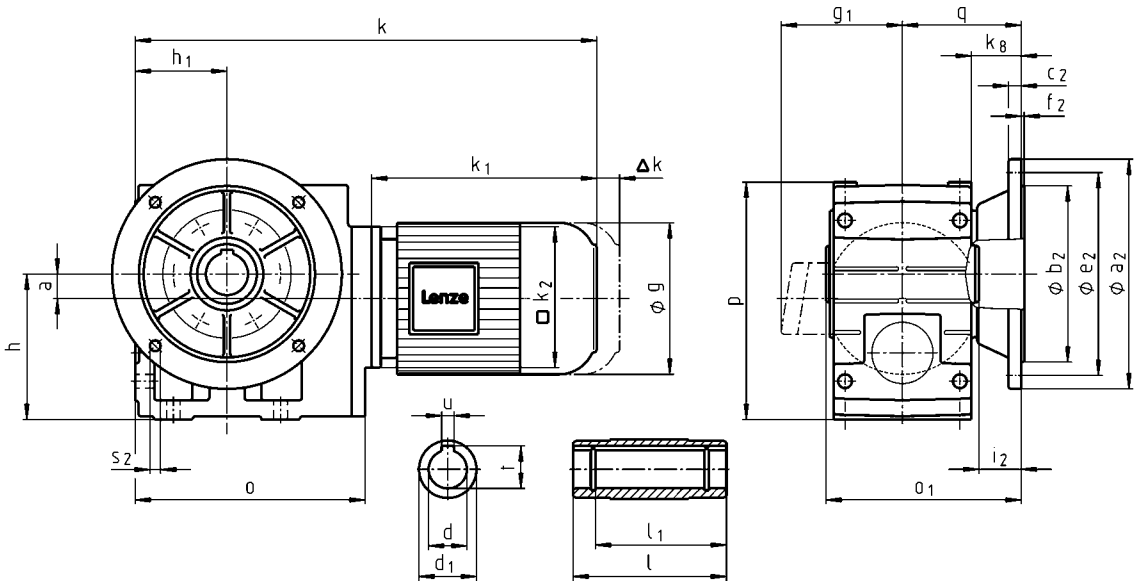

		063C11 063C12 063C31 063C32	063C42	071C11	071C13 071C31 071C32 071C33 071C42	080C11 080C13 080C31 080C32 080C33 080C42	090C11 090C31
g		123		139		156	176
g_1	MDEMAXX	100		109		141	146
	MDEMABR	107		118		132	137
k_1	MDEMAXX	187		207		224.5	274
k_2		120				145	180
Δ k	MDEMABR	40		52		73	68
	MDFMAXX			128			
	MDFMABR	170		165		183	181
				k			
GSS04		377		397		420	479
GSS05			399	419		441	501
GSS06			439		459	481	541
GSS07						524	584

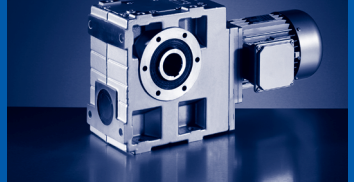

		090C32	100C12 100C31 100C32 100C41	112C22 112C31	112C32 112C41	132C12 132C21 132C22 132C32	160C22	160C32
g		176	194	218		258	310	
g_1	MDEMAXX	146	157	167		195	210	
	MDEMABR	137	147	158		187	210	
k_1	MDEMAXX	248	309	319	363	403	457.5	501.5
k_2		180		222		265	300	
Δ k	MDEMABR	68	76	90		109.5	105	
	MDFMAXX	128	109	102		115	149	
	MDFMABR	181	170	183		201.5	179	
		k						
GSS04		453						
GSS05		475	536					
GSS06		515	576	592	636			
GSS07		558	619	635	679	727	786	830

	a	h[1)]	h_1	k_8	o	p[1)]	q
GSS04	20	100	71	41	181	171	91
GSS05	23	125	80	40	212	205	103.5
GSS06	26	150	100	49	255	250	121.5
GSS07	33	190	120	65.5	305	310	155.5

	d	d_1	l	l_1	u	t	i_2	o_1[1)]	a_2	b_2	c_2	e_2	f_2	s_2
	H7				JS9	+0,2				j7				
GSS04	25 30	45 45	115 115	100 100	8 8	28.3 33.3	33 33	148.5 148.5	160	110	10	130	3.5	4 x 9
GSS05	30 35	50 50	140 140	124 124	8 10	33.3 38.3	33 33	173.5 173.5	200	130	12	165	4	4 x 11
GSS06	40 45	65 65	160 160	140 140	12 14	43.3 48.8	42 41	201.5 201.5	250	180	15	215	4	4 x 14
GSS07	50 55	75 75	200 200	175 175	14 16	53.8 59.3	55 55	255.5 255.5	250 300	180 230	15 17	215 265	4 4	4 x 14 4 x 14

[1)] k_2 !

GSS□□-2M V□R

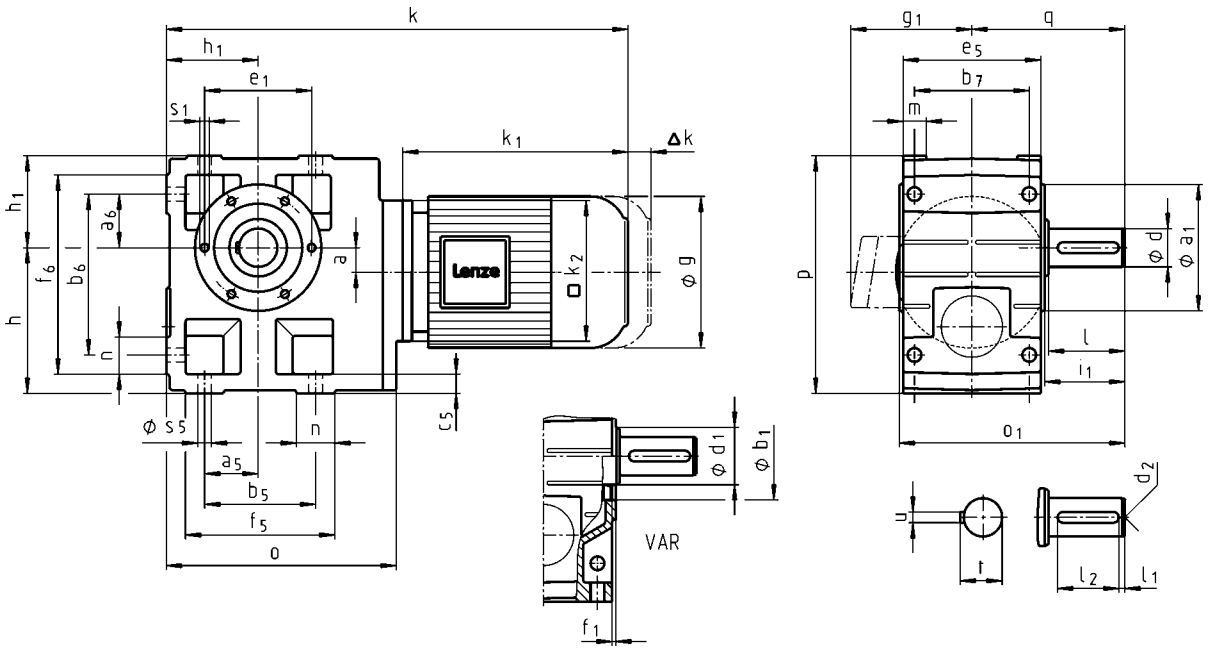

		063C11 063C12 063C31 063C32	063C42	071C11	071C13 071C31 071C32 071C33 071C42	080C11 080C13 080C31 080C32 080C33 080C42	090C11 090C31
g		123		139		156	176
g_1	MDEMAXX	100		109		141	146
	MDEMABR	107		118		132	137
k_1	MDEMAXX	187		207		224.5	274
k_2		120				145	180
Δ k	MDEMABR	40		52		73	68
	MDFMAXX	128					
	MDFMABR	170		165		183	181
		k					
GSS04		377		397		420	479
GSS05			399	419		441	501
GSS06			439		459	481	541
GSS07						524	584

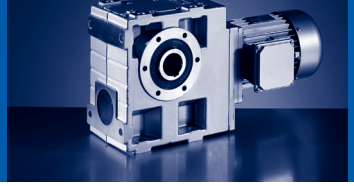

		090C32	100C12 100C31 100C32 100C41	112C22 112C31	112C32 112C41	132C12 132C21 132C22 132C32	160C22	160C32
g		176	194	218		258	310	
g_1	MDEMAXX	146	157	167		195	210	
	MDEMABR	137	147	158		187	210	
k_1	MDEMAXX	248	309	319	363	403	457.5	501.5
k_2		180		222		265	300	
Δ k	MDEMABR	68	76	90		109.5	105	
	MDFMAXX	128	109	102		115	149	
	MDFMABR	181	170	183		201.5	179	
		k						
GSS04		453						
GSS05		475	536					
GSS06		515	576	592	636			
GSS07		558	619	635	679	727	786	830

	a	h[1)]	h_1	o	p[1)]	q
GSS04	20	100	71	181	171	107.5
GSS05	23	125	80	212	205	130
GSS06	26	150	100	255	250	160
GSS07	33	190	120	305	310	200

	d	d_1	d_2	l	l_1	l_2	u	t	i_1	o_1[1)]	a_1	b_1	e_1	f_1	s_1
	k6											H7			
GSS04	25	45	M10	50	6	40	8	28	52.5	162.5	104	75	90	3	M6x12
GSS05	30	45	M10	60	6	45	8	33	64	196.5	118	80	100	4	M8x15
GSS06	40	65	M16	80	7	63	12	43	85	235.5	140	100	120	4	M10x16
GSS07	50	75	M16	100	8	80	14	53.5	105	295.5	165	115	140	5	M12x18

	a_5	a_6	b_5	b_6	b_7	c_5	e_5	f_5	f_6	m	n	s_5
GSS04	45	45	90	119	85	14	100	112	141	20	22	9
GSS05	47.5	47.5	95	140	105	17	127	124	169	21	29	11
GSS06	60	60	120	170	120	20	145	156	206	23	36	14
GSS07	70	70	140	210	150	25	180	185	255	28	45	18

[1)] k_2 !

GSS□□-2M VAK

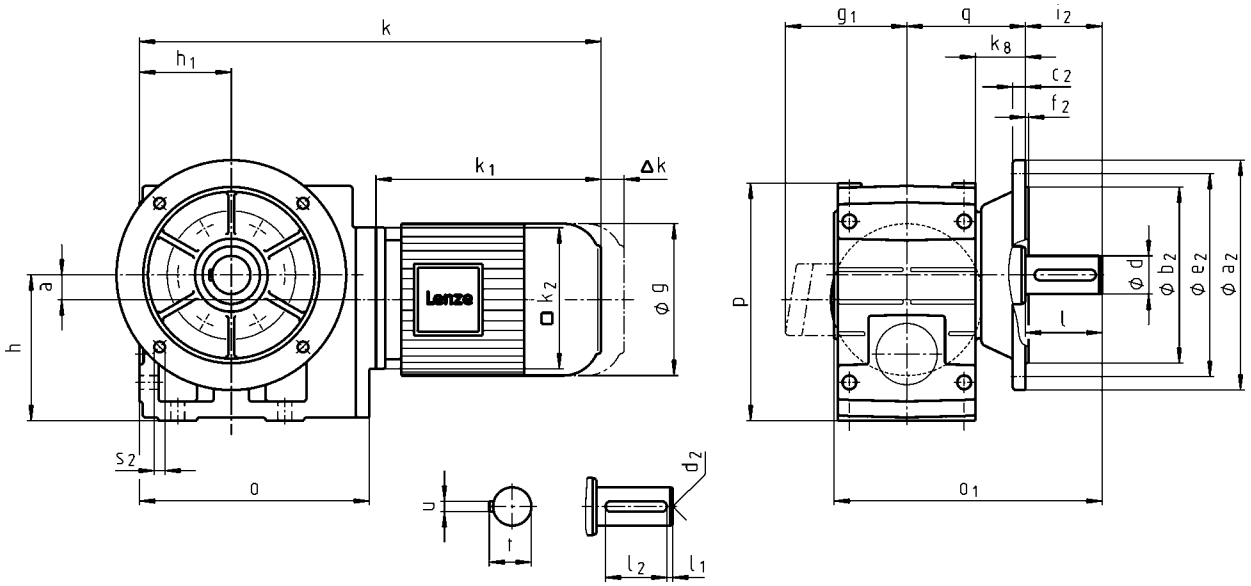

		063C11 063C12 063C31 063C32	063C42	071C11	071C13 071C31 071C32 071C33 071C42	080C11 080C13 080C31 080C32 080C33 080C42	090C11 090C31
g		123		139		156	176
g_1	MDEMAXX	100		109		141	146
	MDEMABR	107		118		132	137
k_1	MDEMAXX	187		207		224.5	274
k_2		120				145	180
Δ k	MDEMABR	40		52		73	68
	MDFMAXX	128					
	MDFMABR	170		165		183	181
		k					
GSS04		377		397		420	479
GSS05			399	419		441	501
GSS06			439		459	481	541
GSS07						524	584

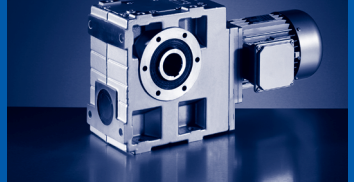

		090C32	100C12 100C31 100C32 100C41	112C22 112C31	112C32 112C41	132C12 132C21 132C22 132C32	160C22	160C32
g		176	194	218		258	310	
g_1	MDEMAXX	146	157	167		195	210	
	MDEMABR	137	147	158		187	210	
k_1	MDEMAXX	248	309	319	363	403	457.5	501.5
k_2		180		222		265	300	
Δ k	MDEMABR	68	76	90		109.5	105	
	MDFMAXX	128	109	102		115	149	
	MDFMABR	181	170	183		201.5	179	
		k						
GSS04		453						
GSS05		475	536					
GSS06		515	576	592	636			
GSS07		558	619	635	679	727	786	830

	a	h[1)]	h_1	k_8	o	p[1)]	q
GSS04	20	100	71	41	181	171	91
GSS05	23	125	80	40	212	205	103.5
GSS06	26	150	100	49	255	250	121.5
GSS07	33	190	120	65.5	305	310	155.5

	d	d_2	l	l_1	l_2	u	t	i_2	o_1[1)]	a_2	b_2	c_2	e_2	f_2	s_2
	k6										j7				
GSS04	25	M10	50	6	40	8	28	50	195.5	160	110	10	130	3.5	4 x 9
GSS05	30	M10	60	6	45	8	33	60	229.5	200	130	12	165	4	4 x 11
GSS06	40	M16	80	7	63	12	43	80	276.5	250	180	15	215	4	4 x 14
GSS07	50	M16	100	8	80	14	53.5	100	350.5	250 300	180 230	15 17	215 265	4 4	4 x 14 4 x 14

[1)] k_2 !

GSS□□-3M H□R

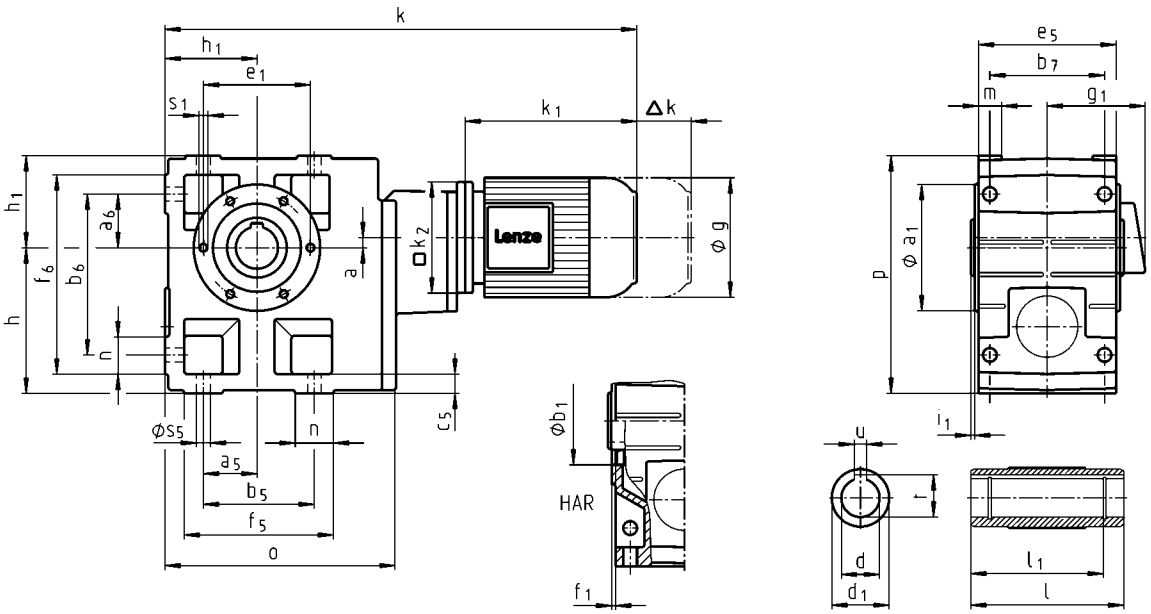
k
h1
e1
s1
k1
Δk
h1
a6
f6
b6
h
n
a
□k2
Lenze
Φ g
Φs5
n
a5
b5
f5
o
c5
Φb1
HAR
f1
e5
b7
m
g1
p
Φ a1
i1
u
t
d
d1
l1
l

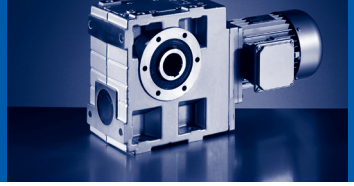

		063C11 063C12 063C31 063C32	063C42	071C11 071C13 071C31 071C32 071C33 071C42	080C11 080C13	080C31 080C32 080C33 080C42	090C11 090C31	090C32	100C12 100C31 100C41
g		123		139	156		176		194
g_1	MDEMAXX	100		109	141		146		157
	MDEMABR	107		118	132		137		147
k_1	MDEMAXX	187		207	224.5		274	248	309
k_2		120			145		180		
Δ k	MDEMABR	40		52	73		68		76
	MDFMAXX	128							109
	MDFMABR	170		165	183		181		170
		k							
GSS05		475		495	518				
GSS06		532		552	575		634		
GSS07			586	606	629		688	662	723

	a	h	h_1	o	p
GSS05	13	125	80	209	205
GSS06	10	150	100	252	250
GSS07	12	190	120	299	310

	d	d_1	l	l_1	u	t	i_1	a_1	b_1	e_1	f_1	s_1
	H7				JS9	+0,2			H7			
GSS05	30 35	50 50	140 140	124 124	8 10	33.3 38.3	4 4	118	80	100	4	M8x15
GSS06	40 45	65 65	160 160	140 140	12 14	43.3 48.8	5 5	140	100	120	4	M10x16
GSS07	50 55	75 75	200 200	175 175	14 16	53.8 59.3	5 5	165	115	140	5	M12x18

	a_5	a_6	b_5	b_6	b_7	c_5	e_5	f_5	f_6	m	n	s_5
GSS05	47.5	47.5	95	140	105	17	127	124	169	21	29	11
GSS06	60	60	120	170	120	20	145	156	206	23	36	14
GSS07	70	70	140	210	150	25	180	185	255	28	45	18

GSS□□-3M HAK

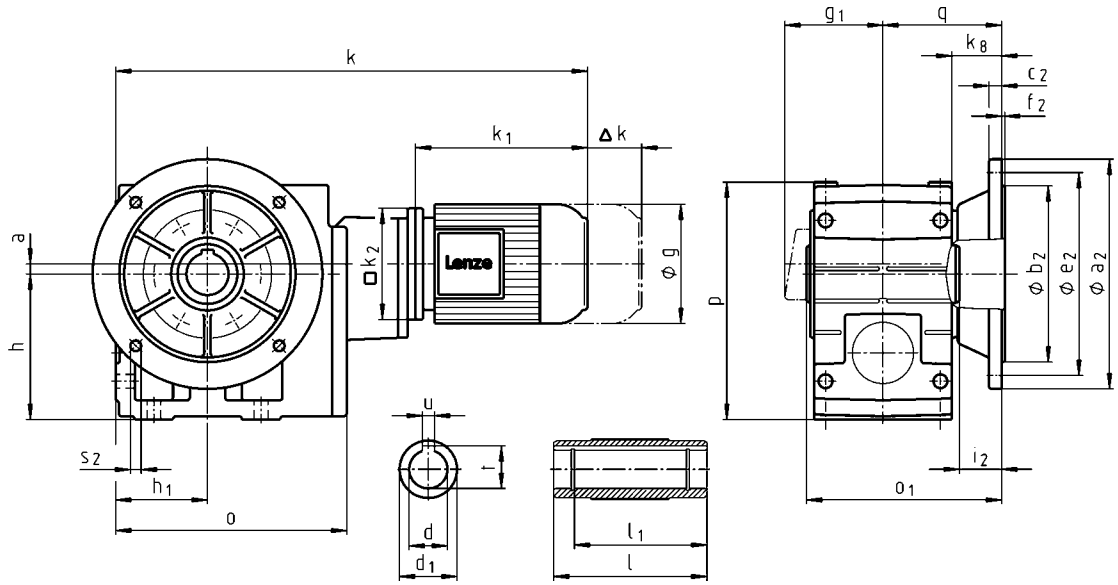
k
k1
Δk
g1
q
k8
c2
f2
a
h
□k2
Lenze
Φg
p
Φb2
Φe2
Φa2
s2
h1
o
u
t
d
d1
l1
l
i2
o1

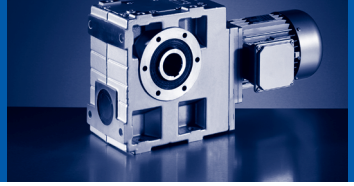

		063C11 063C12 063C31 063C32	063C42	071C11 071C13 071C31 071C32 071C33 071C42	080C11 080C13	080C31 080C32 080C33 080C42	090C11 090C31	090C32	100C12 100C31 100C41
g		123		139	156		176		194
g_1	MDEMAXX	100		109	141		146		157
	MDEMABR	107		118	132		137		147
k_1	MDEMAXX	187		207	224.5		274	248	309
k_2		120			145		180		
Δ k	MDEMABR	40		52	73		68		76
	MDFMAXX	128							109
	MDFMABR	170		165	183		181		170
		k							
GSS05		475		495	518				
GSS06		532		552	575		634		
GSS07			586	606	629		688	662	723

	a	h	h_1	k_8	o	p	q
GSS05	13	125	80	40	209	205	103.5
GSS06	10	150	100	49	252	250	121.5
GSS07	12	190	120	65.5	299	310	155.5

	d	d_1	l	l_1	u	t	i_2	o_1	a_2	b_2	c_2	e_2	f_2	s_2
	H7				JS9	+0,2				j7				
GSS05	30 35	50 50	140 140	124 124	8 10	33.3 38.3	33 33	173.5 173.5	200	130	12	165	4	4 x 11
GSS06	40 45	65 65	160 160	140 140	12 14	43.3 48.8	42 41	201.5 201.5	250	180	15	215	4	4 x 14
GSS07	50 55	75 75	200 200	175 175	14 16	53.8 59.3	55 55	255.5 255.5	250 300	180 230	15 17	215 265	4 4	4 x 14 4 x 14

GSS□□-3M V□R

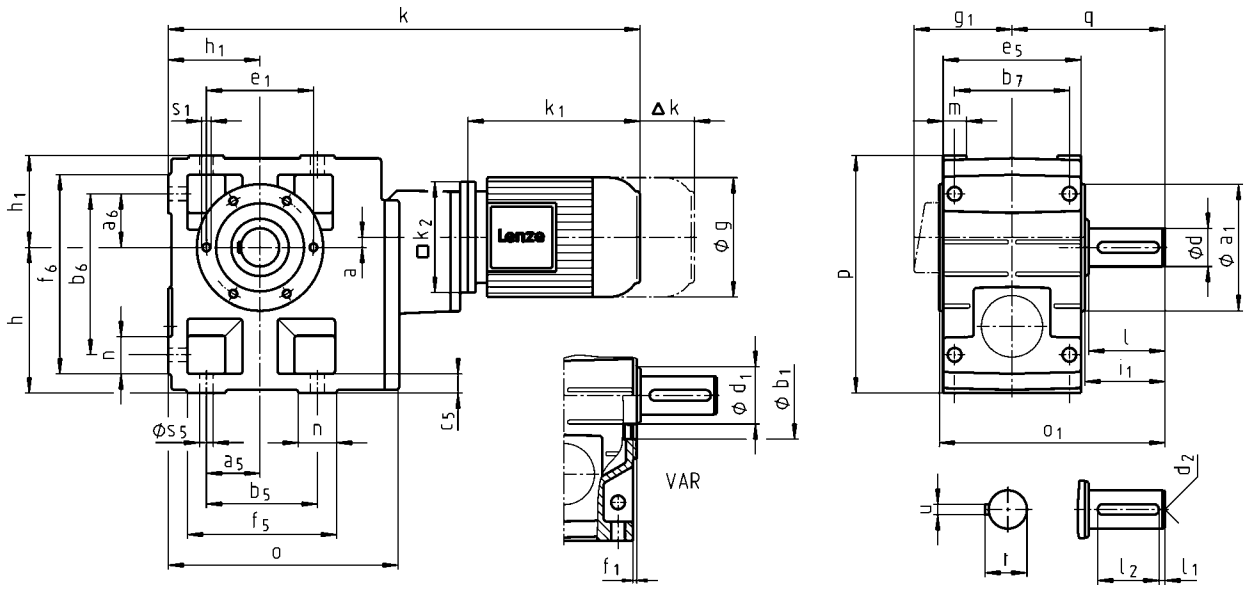
k
h1
e1
s1
k1
Δk
h1
a6
f6
b6
h
n
a
□k2
Lenze
Φg
Φs5
n
a5
b5
f5
o
c5
Φd1
Φb1
VAR
f1
g1
q
e5
b7
m
p
Φd
Φa1
l
i1
o1
d2
u
r
l2
l1

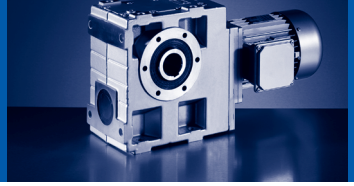

		063C11 063C12 063C31 063C32	063C42	071C11 071C13 071C31 071C32 071C33 071C42	080C11 080C13	080C31 080C32 080C33 080C42	090C11 090C31	090C32	100C12 100C31 100C41
g		123		139	156		176		194
g_1	MDEMAXX	100		109	141		146		157
	MDEMABR	107		118	132		137		147
k_1	MDEMAXX	187		207	224.5		274	248	309
k_2		120			145		180		
Δ k	MDEMABR	40		52	73		68		76
	MDFMAXX	128							109
	MDFMABR	170		165	183		181		170
		k							
GSS05		475		495	518				
GSS06		532		552	575		634		
GSS07			586	606	629		688	662	723

	a	h	h_1	o	p	q
GSS05	13	125	80	209	205	130
GSS06	10	150	100	252	250	160
GSS07	12	190	120	299	310	200

	d	d_1	d_2	l	l_1	l_2	u	t	i_1	o_1	a_1	b_1	e_1	f_1	s_1
	k6											H7			
GSS05	30	45	M10	60	6	45	8	33	64	196.5	118	80	100	4	M8x15
GSS06	40	65	M16	80	7	63	12	43	85	235.5	140	100	120	4	M10x16
GSS07	50	75	M16	100	8	80	14	53.5	105	295.5	165	115	140	5	M12x18

	a_5	a_6	b_5	b_6	b_7	c_5	e_5	f_5	f_6	m	n	s_5
GSS05	47.5	47.5	95	140	105	17	127	124	169	21	29	11
GSS06	60	60	120	170	120	20	145	156	206	23	36	14
GSS07	70	70	140	210	150	25	180	185	255	28	45	18

GSS□□-3M VAK

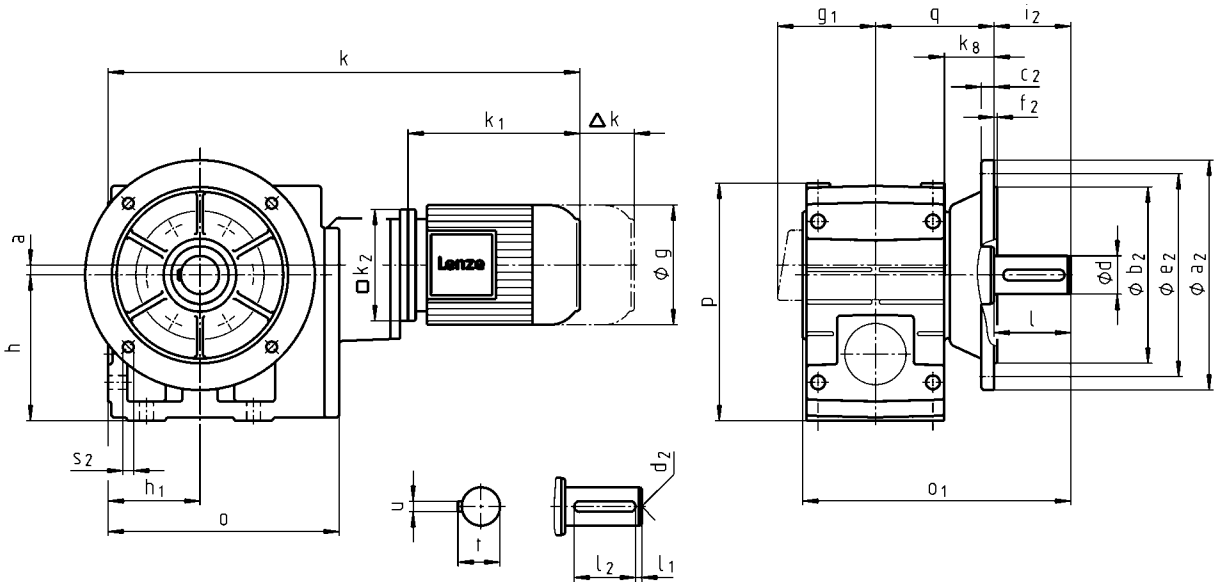
k
k1
Δk
a
h
□k2
Lenze
Φ g
s2
h1
o
u
t
d2
l2
l1
g1
q
i2
k8
c2
f2
p
Φd
Φ b2
Φ e2
Φ a2
l
o1

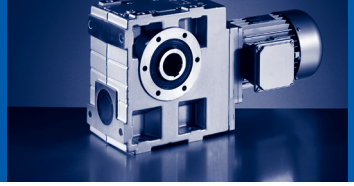

		063C11 063C12 063C31 063C32	063C42	071C11 071C13 071C31 071C32 071C33 071C42	080C11 080C13	080C31 080C32 080C33 080C42	090C11 090C31	090C32	100C12 100C31 100C41
g		123		139	156		176		194
g_1	MDEMAXX	100		109	141		146		157
	MDEMABR	107		118	132		137		147
k_1	MDEMAXX	187		207	224.5		274	248	309
k_2		120			145		180		
Δ k	MDEMABR	40		52	73		68		76
	MDFMAXX	128							109
	MDFMABR	170		165	183		181		170
		k							
GSS05		475		495	518				
GSS06		532		552	575		634		
GSS07			586	606	629		688	662	723

	a	h	h_1	k_8	o	p	q
GSS05	13	125	80	40	209	205	103.5
GSS06	10	150	100	49	252	250	121.5
GSS07	12	190	120	65.5	299	310	155.5

	d	d_2	l	l_1	l_2	u	t	i_2	o_1	a_2	b_2	c_2	e_2	f_2	s_2
	k6										j7				
GSS05	30	M10	60	6	45	8	33	60	229.5	200	130	12	165	4	4 x 11
GSS06	40	M16	80	7	63	12	43	80	276.5	250	180	15	215	4	4 x 14
GSS07	50	M16	100	8	80	14	53.5	100	350.5	250 300	180 230	15 17	215 265	4 4	4 x 14 4 x 14

GSS□□-2M H□R

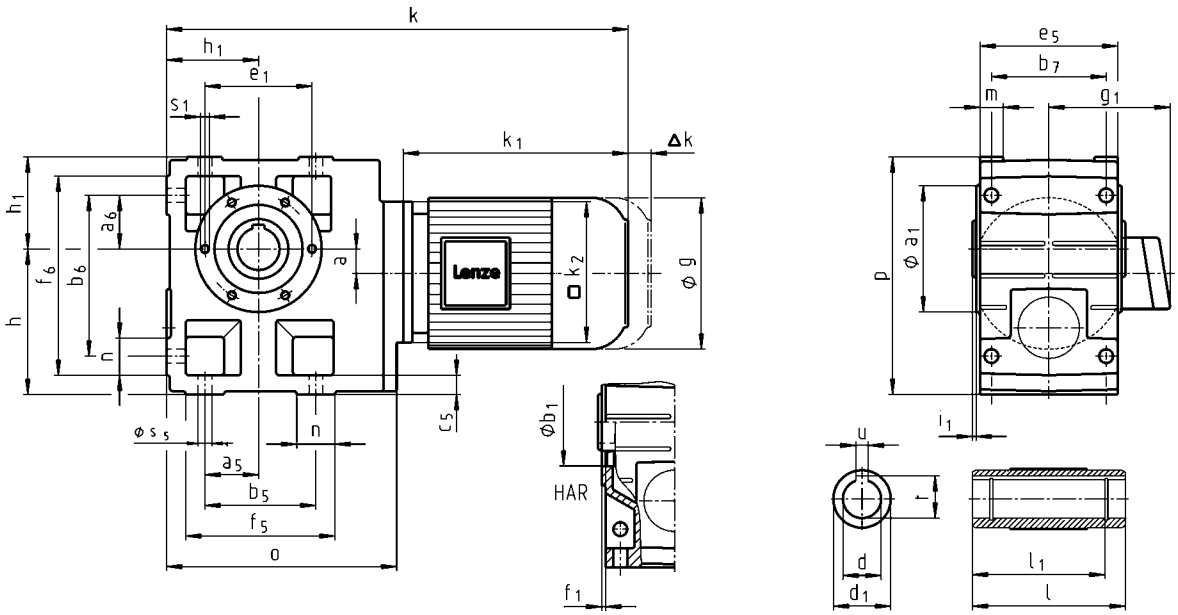
k
h1
e1
s1
k1
Δk
h1
a6
f6
b6
h
n
a
Lenze
□k2
ϕ g
ϕ s5
n
a5
b5
f5
o
c5
ϕb1
HAR
f1
e5
b7
m
g1
p
ϕ a1
i1
u
t
d
d1
l1
l

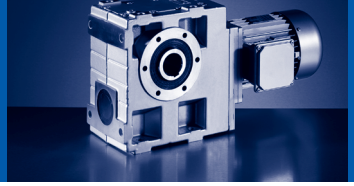

		080C32	090C12 090C32	100C12	100C32	112C22	132C12 132C22	160C22	160C32
g		156	176	194		218	258	310	
g_1	MHEMAXX	141	146	157		167	195	210	
	MHEMABR	132	137	147		158	187	210	
k_1	MHEMAXX	224.5	274	309	324	363	403	457.5	501.5
k_2		145	180			222	265	300	
Δ k	MHEMABR	73	68	76		90	109.5	105	
	MHFMAXX	128		109		102	115	149	
	MHFMABR	183	181	170		183	201.5	179	
		k							
GSS04		420	479						
GSS05		441	501	536	551				
GSS06		481	541	576	591	636	684		
GSS07		524	584	619	634	679	727	786	830

	a	h[1)]	h_1	o	p[1)]
GSS04	20	100	71	181	171
GSS05	23	125	80	212	205
GSS06	26	150	100	255	250
GSS07	33	190	120	305	310

	d	d_1	l[1)]	l_1	u	t	i_1	a_1	b_1	e_1	f_1	s_1
	H7				JS9	+0,2			H7			
GSS04	25 30	45 45	115 115	100 100	8 8	28.3 33.3	2.5 2.5	104	75	90	3	M6x12
GSS05	30 35	50 50	140 140	124 124	8 10	33.3 38.3	4 4	118	80	100	4	M8x15
GSS06	40 45	65 65	160 160	140 140	12 14	43.3 48.8	5 5	140	100	120	4	M10x16
GSS07	50 55	75 75	200 200	175 175	14 16	53.8 59.3	5 5	165	115	140	5	M12x18

	a_5	a_6	b_5	b_6	b_7	c_5	e_5	f_5	f_6	m	n	s_5
GSS04	45	45	90	119	85	14	100	112	141	20	22	9
GSS05	47.5	47.5	95	140	105	17	127	124	169	21	29	11
GSS06	60	60	120	170	120	20	145	156	206	23	36	14
GSS07	70	70	140	210	150	25	180	185	255	28	45	18

[1)] k_2 !

GSS□□-2M HAK

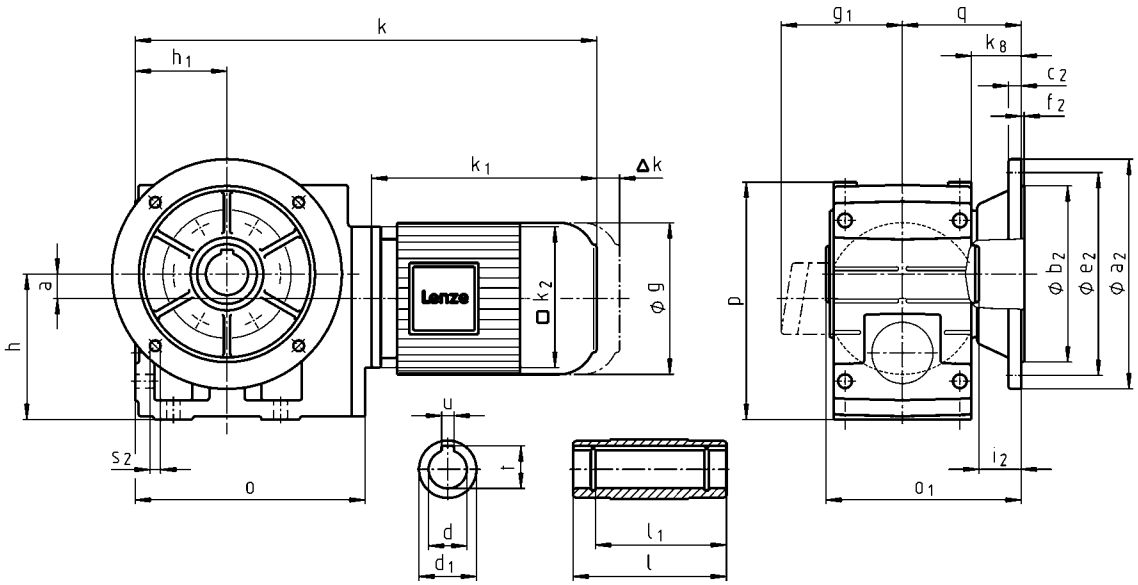

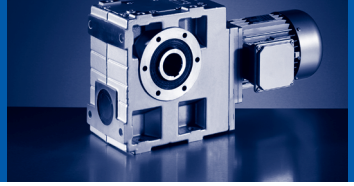

		080C32	090C12 090C32	100C12	100C32	112C22	132C12 132C22	160C22	160C32
g		156	176	194		218	258	310	
g_1	MHEMAXX	141	146	157		167	195	210	
	MHEMABR	132	137	147		158	187	210	
k_1	MHEMAXX	224.5	274	309	324	363	403	457.5	501.5
k_2		145	180			222	265	300	
Δ k	MHEMABR	73	68	76		90	109.5	105	
	MHFMAXX	128		109		102	115	149	
	MHFMABR	183	181	170		183	201.5	179	
		k							
GSS04		420	479						
GSS05		441	501	536	551				
GSS06		481	541	576	591	636	684		
GSS07		524	584	619	634	679	727	786	830

	a	h[1)]	h_1	k_8	o	p[1)]	q
GSS04	20	100	71	41	181	171	91
GSS05	23	125	80	40	212	205	103.5
GSS06	26	150	100	49	255	250	121.5
GSS07	33	190	120	65.5	305	310	155.5

	d	d_1	l	l_1	u	t	i_2	o_1[1)]	a_2	b_2	c_2	e_2	f_2	s_2
	H7				JS9	+0,2				j7				
GSS04	25 30	45 45	115 115	100 100	8 8	28.3 33.3	33 33	148.5 148.5	160	110	10	130	3.5	4 x 9
GSS05	30 35	50 50	140 140	124 124	8 10	33.3 38.3	33 33	173.5 173.5	200	130	12	165	4	4 x 11
GSS06	40 45	65 65	160 160	140 140	12 14	43.3 48.8	42 41	201.5 201.5	250	180	15	215	4	4 x 14
GSS07	50 55	75 75	200 200	175 175	14 16	53.8 59.3	55 55	255.5 255.5	250 300	180 230	15 17	215 265	4 4	4 x 14 4 x 14

[1)] k_2 !

GSS□□-2M V□R

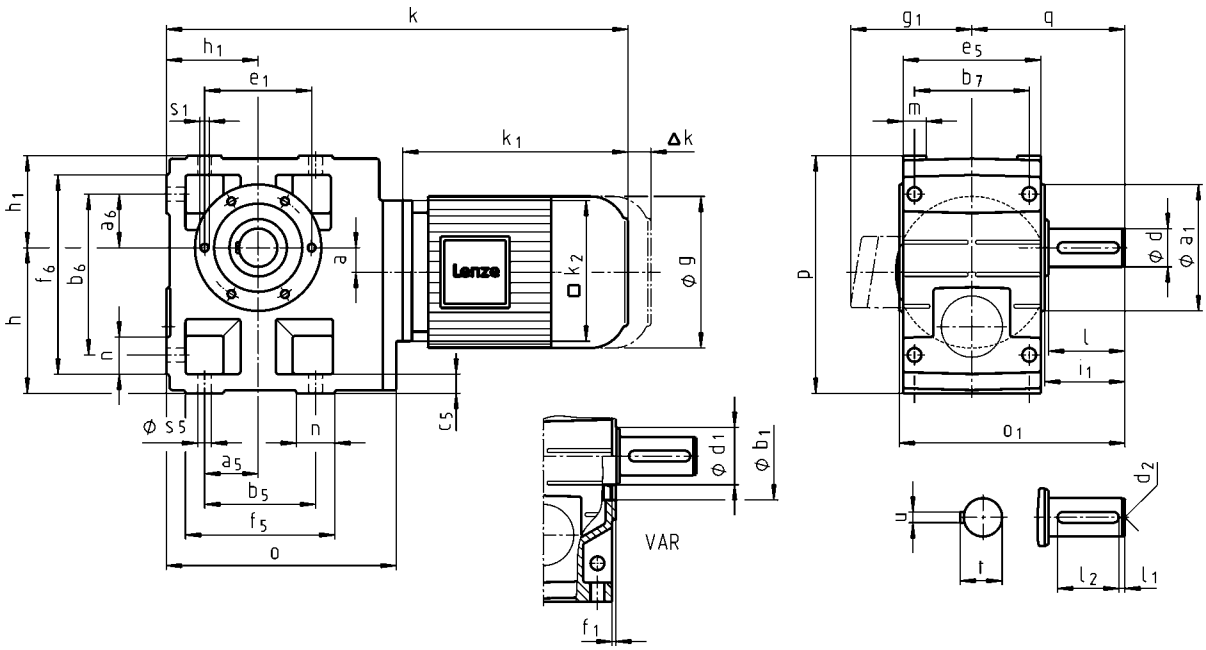
k
h1
e1
s1
k1
Δk
h1
a6
f6
b6
h
n
a
□k2
ϕ g
ϕ s5
n
a5
b5
f5
o
c5
ϕ d1
ϕ b1
VAR
f1
g1
q
e5
b7
m
p
ϕ d
ϕ a1
l
i1
o1
u
t
d2
l2
l1

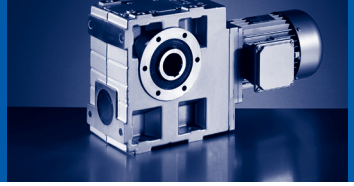

		080C32	090C12 090C32	100C12	100C32	112C22	132C12 132C22	160C22	160C32
g		156	176	194		218	258	310	
g_1	MHEMAXX	141	146	157		167	195	210	
	MHEMABR	132	137	147		158	187	210	
k_1	MHEMAXX	224.5	274	309	324	363	403	457.5	501.5
k_2		145	180			222	265	300	
Δ k	MHEMABR	73	68	76		90	109.5	105	
	MHFMAXX	128		109		102	115	149	
	MHFMABR	183	181	170		183	201.5	179	
		k							
GSS04		420	479						
GSS05		441	501	536	551				
GSS06		481	541	576	591	636	684		
GSS07		524	584	619	634	679	727	786	830

	a	h[1)]	h_1	o	p[1)]	q
GSS04	20	100	71	181	171	107.5
GSS05	23	125	80	212	205	130
GSS06	26	150	100	255	250	160
GSS07	33	190	120	305	310	200

	d	d_1	d_2	l	l_1	l_2	u	t	i_1	o_1[1)]	a_1	b_1	e_1	f_1	s_1
	k6											H7			
GSS04	25	45	M10	50	6	40	8	28	52.5	162.5	104	75	90	3	M6x12
GSS05	30	45	M10	60	6	45	8	33	64	196.5	118	80	100	4	M8x15
GSS06	40	65	M16	80	7	63	12	43	85	235.5	140	100	120	4	M10x16
GSS07	50	75	M16	100	8	80	14	53.5	105	295.5	165	115	140	5	M12x18

	a_5	a_6	b_5	b_6	b_7	c_5	e_5	f_5	f_6	m	n	s_5
GSS04	45	45	90	119	85	14	100	112	141	20	22	9
GSS05	47.5	47.5	95	140	105	17	127	124	169	21	29	11
GSS06	60	60	120	170	120	20	145	156	206	23	36	14
GSS07	70	70	140	210	150	25	180	185	255	28	45	18

[1)] k_2 !

GSS□□-2M VAK

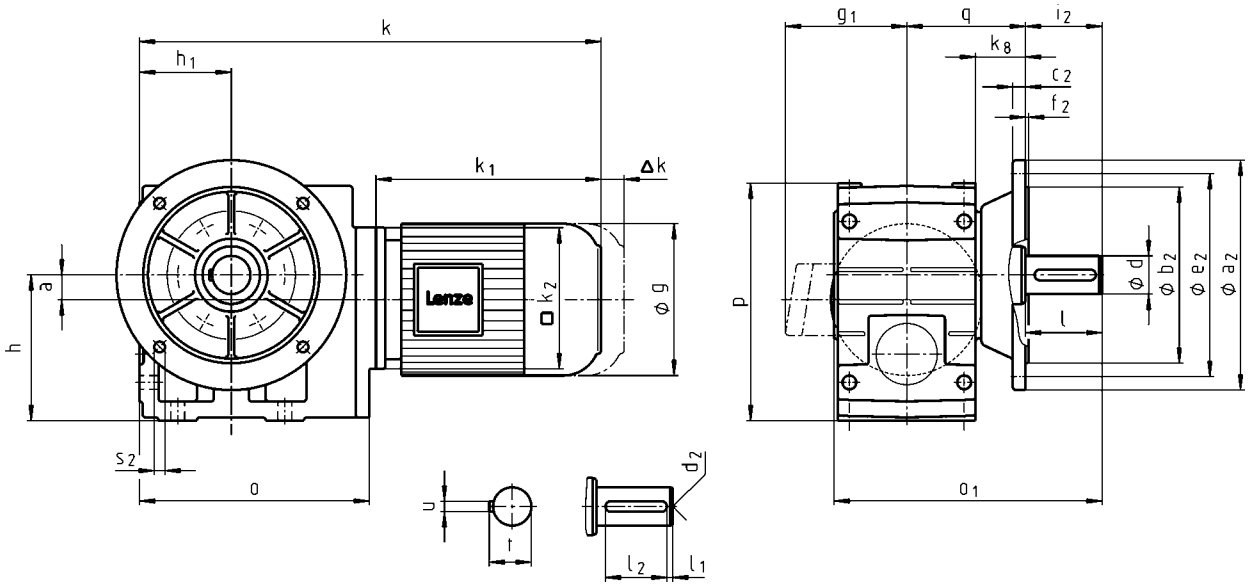
k
h1
k1
Δk
a
h
s2
o
k2
ϕ g
u
t
d2
l2
l1
g1
q
i2
k8
c2
f2
p
ϕ d
ϕ b2
ϕ e2
ϕ a2
l
o1

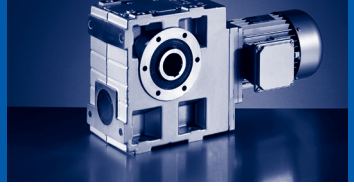

		080C32	090C12 090C32	100C12	100C32	112C22	132C12 132C22	160C22	160C32
g		156	176	194		218	258	310	
g_1	MHEMAXX	141	146	157		167	195	210	
	MHEMABR	132	137	147		158	187	210	
k_1	MHEMAXX	224.5	274	309	324	363	403	457.5	501.5
k_2		145	180			222	265	300	
Δ k	MHEMABR	73	68	76		90	109.5	105	
	MHFMAXX	128		109		102	115	149	
	MHFMABR	183	181	170		183	201.5	179	
		k							
GSS04		420	479						
GSS05		441	501	536	551				
GSS06		481	541	576	591	636	684		
GSS07		524	584	619	634	679	727	786	830

	a	h[1)]	h_1	k_8	o	p[1)]	q
GSS04	20	100	71	41	181	171	91
GSS05	23	125	80	40	212	205	103.5
GSS06	26	150	100	49	255	250	121.5
GSS07	33	190	120	65.5	305	310	155.5

	d	d_2	l	l_1	l_2	u	t	i_2	o_1[1)]	a_2	b_2	c_2	e_2	f_2	s_2
	k6										j7				
GSS04	25	M10	50	6	40	8	28	50	195.5	160	110	10	130	3.5	4 x 9
GSS05	30	M10	60	6	45	8	33	60	229.5	200	130	12	165	4	4 x 11
GSS06	40	M16	80	7	63	12	43	80	276.5	250	180	15	215	4	4 x 14
GSS07	50	M16	100	8	80	14	53.5	100	350.5	250 300	180 230	15 17	215 265	4 4	4 x 14 4 x 14

[1)] k_2 !

GSS□□-3M H□R

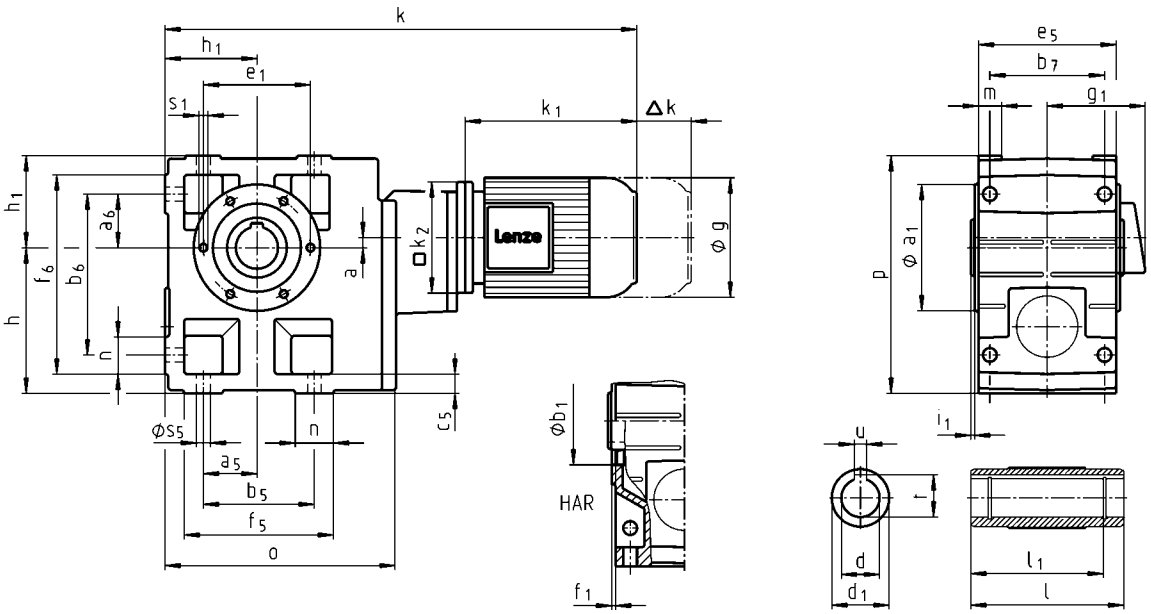
k
h1
e1
s1
k1
Δk
h1
a6
f6
b6
h
n
a
□k2
Lenze
Φg
Φs5
n
a5
b5
f5
o
c5
Φb1
HAR
f1
e5
b7
m
g1
p
Φa1
i1
u
t
d
d1
l1
l

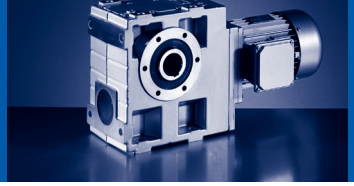

		080C32	090C12	090C32	100C12
g		156	176		194
g_1	MHEMAXX	141	146		157
	MHEMABR	132	137		147
k_1	MHEMAXX	224.5	274		309
k_2		145	180		
Δ k	MHEMABR	73	68		76
	MHFMAXX	128			109
	MHFMABR	183	181		170
		k			
GSS06		575	634		
GSS07		629	688		723

	a	h	h_1	o	p
GSS06	10	150	100	252	250
GSS07	12	190	120	299	310

	d	d_1	l	l_1	u	t	i_1	a_1	b_1	e_1	f_1	s_1
	H7				JS9	+0,2			H7			
GSS06	40 45	65 65	160 160	140 140	12 14	43.3 48.8	5 5	140	100	120	4	M10x16
GSS07	50 55	75 75	200 200	175 175	14 16	53.8 59.3	5 5	165	115	140	5	M12x18

	a_5	a_6	b_5	b_6	b_7	c_5	e_5	f_5	f_6	m	n	s_5
GSS06	60	60	120	170	120	20	145	156	206	23	36	14
GSS07	70	70	140	210	150	25	180	185	255	28	45	18

GSS□□-3M HAK

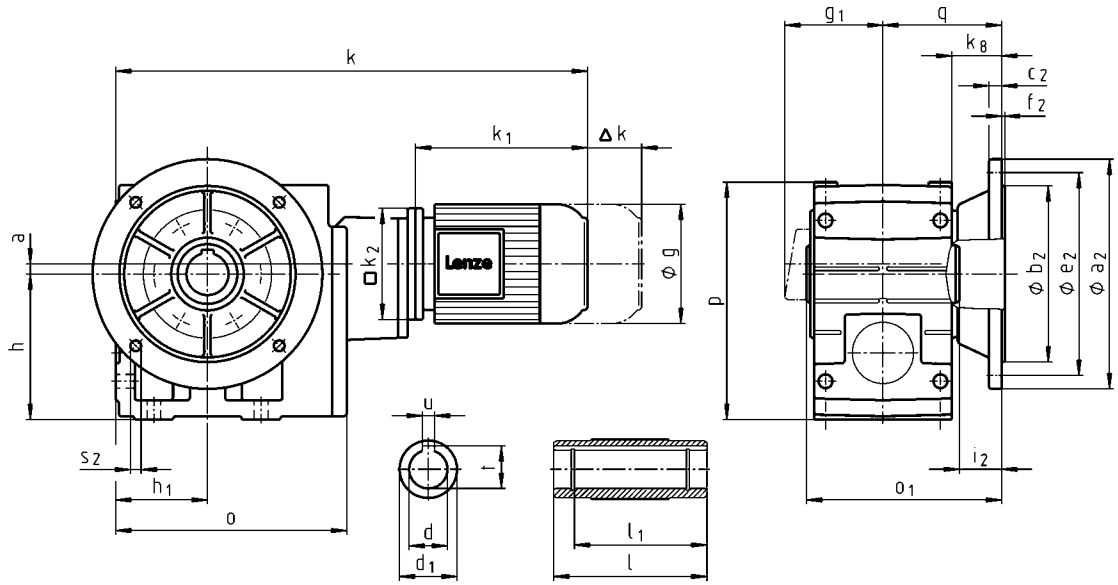
k
k1
Δk
g1
q
k8
c2
f2
a
h
□k2
Lenze
Φg
p
Φb2
Φe2
Φa2
s2
h1
o
u
t
d
d1
l1
l
i2
o1

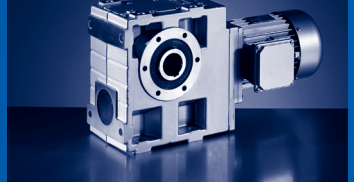

		080C32	090C12	090C32	100C12
g		156	176		194
g_1	MHEMAXX	141	146		157
	MHEMABR	132	137		147
k_1	MHEMAXX	224.5	274		309
k_2		145	180		
Δ k	MHEMABR	73	68		76
	MHFMAXX	128			109
	MHFMABR	183	181		170
		k			
GSS06		575	634		
GSS07		629	688		723

	a	h	h_1	k_8	o	p	q
GSS06	10	150	100	49	252	250	121.5
GSS07	12	190	120	65.5	299	310	155.5

	d	d_1	l	l_1	u	t	i_2	o_1	a_2	b_2	c_2	e_2	f_2	s_2
	H7				JS9	+0,2				j7				
GSS06	40 45	65 65	160 160	140 140	12 14	43.3 48.8	42 41	201.5 201.5	250	180	15	215	4	4 x 14
GSS07	50 55	75 75	200 200	175 175	14 16	53.8 59.3	55 55	255.5 255.5	250 300	180 230	15 17	215 265	4 4	4 x 14 4 x 14

GSS□□-3M V□R

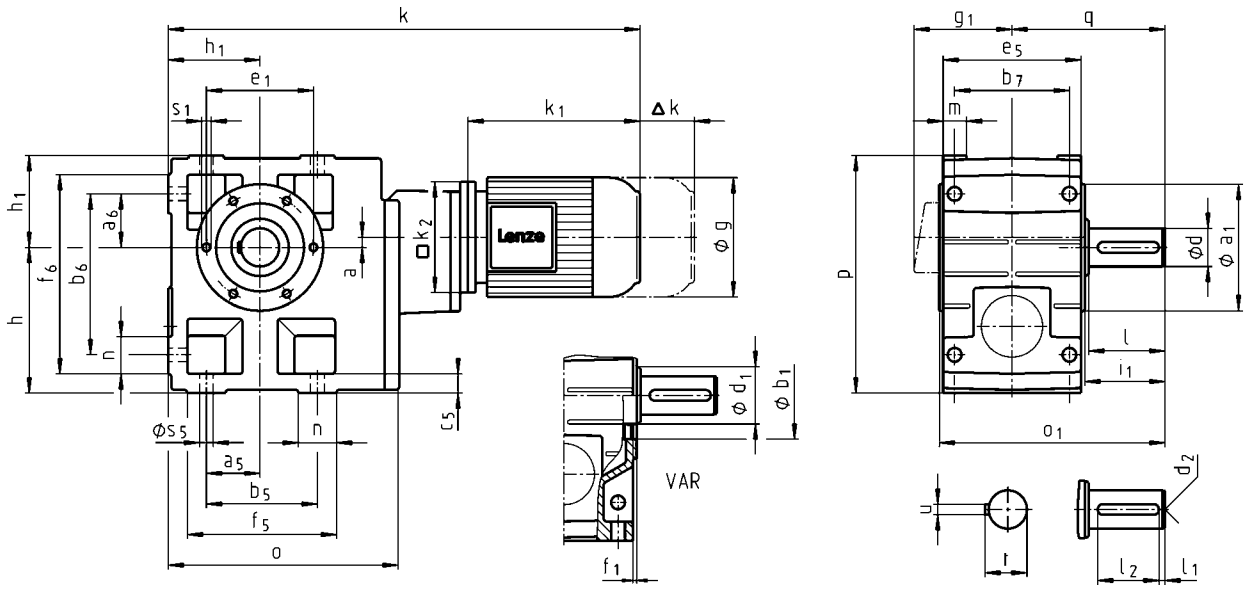
k
h1
e1
s1
k1
Δk
h1
a6
f6
b6
h
n
a
□k2
Lenze
ϕg
ϕs5
n
a5
b5
f5
o
c5
ϕd1
ϕb1
VAR
f1
g1
q
e5
b7
m
p
ϕd
ϕa1
l
i1
o1
d2
u
r
l2
l1

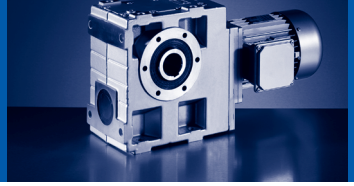

		080C32	090C12	090C32	100C12
g		156	176		194
g_1	MHEMAXX	141	146		157
	MHEMABR	132	137		147
k_1	MHEMAXX	224.5	274		309
k_2		145	180		
Δ k	MHEMABR	73	68		76
	MHFMAXX	128			109
	MHFMABR	183	181		170
		k			
GSS06		575	634		
GSS07		629	688		723

	a	h	h_1	o	p	q
GSS06	10	150	100	252	250	160
GSS07	12	190	120	299	310	200

	d	d_1	d_2	l	l_1	l_2	u	t	i_1	o_1	a_1	b_1	e_1	f_1	s_1
	k6											H7			
GSS06	40	65	M16	80	7	63	12	43	85	235.5	140	100	120	4	M10x16
GSS07	50	75	M16	100	8	80	14	53.5	105	295.5	165	115	140	5	M12x18

	a_5	a_6	b_5	b_6	b_7	c_5	e_5	f_5	f_6	m	n	s_5
GSS06	60	60	120	170	120	20	145	156	206	23	36	14
GSS07	70	70	140	210	150	25	180	185	255	28	45	18

GSS□□-3M VAK

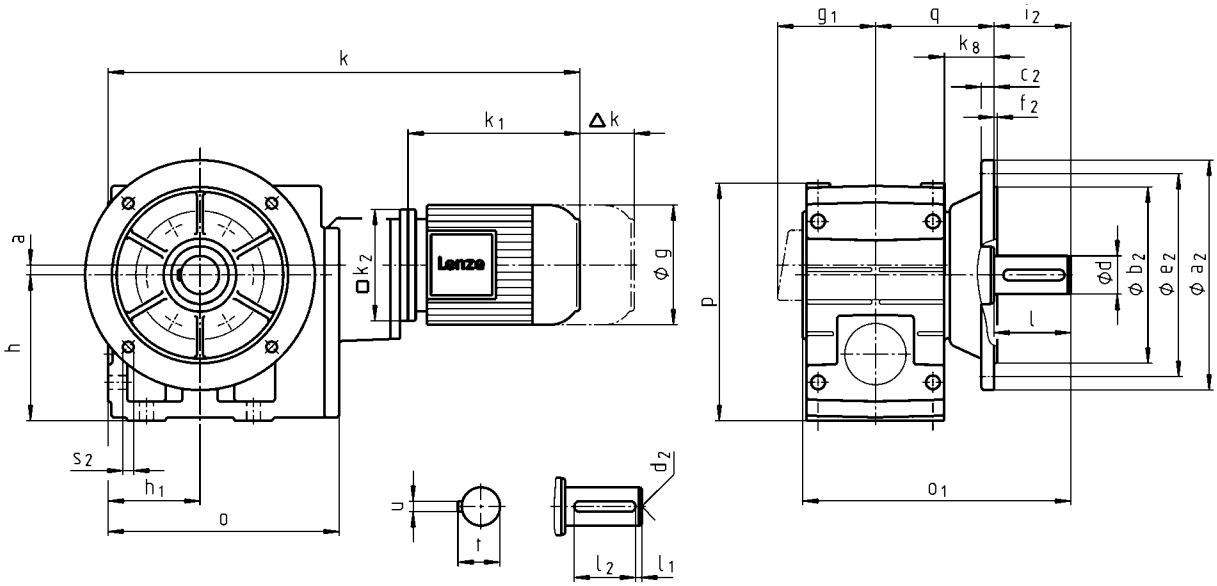
k
k1
Δk
a
h
□k2
Lenze
Φ g
s2
h1
o
u
t
d2
l2
l1
g1
q
i2
k8
c2
f2
p
Φd
Φ b2
Φ e2
Φ a2
l
o1

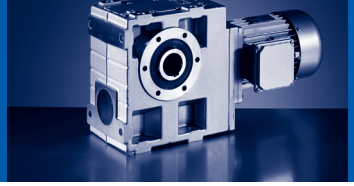

		080C32	090C12	090C32	100C12
g		156	176		194
g_1	MHEMAXX	141	146		157
	MHEMABR	132	137		147
k_1	MHEMAXX	224.5	274		309
k_2		145	180		
Δ k	MHEMABR	73	68		76
	MHFMAXX	128			109
	MHFMABR	183	181		170
		k			
GSS06		575	634		
GSS07		629	688		723

	a	h	h_1	k_8	o	p	q
GSS06	10	150	100	49	252	250	121.5
GSS07	12	190	120	65.5	299	310	155.5

	d	d_2	l	l_1	l_2	u	t	i_2	o_1	a_2	b_2	c_2	e_2	f_2	s_2
	k6										j7				
GSS06	40	M16	80	7	63	12	43	80	276.5	250	180	15	215	4	4 x 14
GSS07	50	M16	100	8	80	14	53.5	100	350.5	250 300	180 230	15 17	215 265	4 4	4 x 14 4 x 14

Hollow shaft with shrink disc

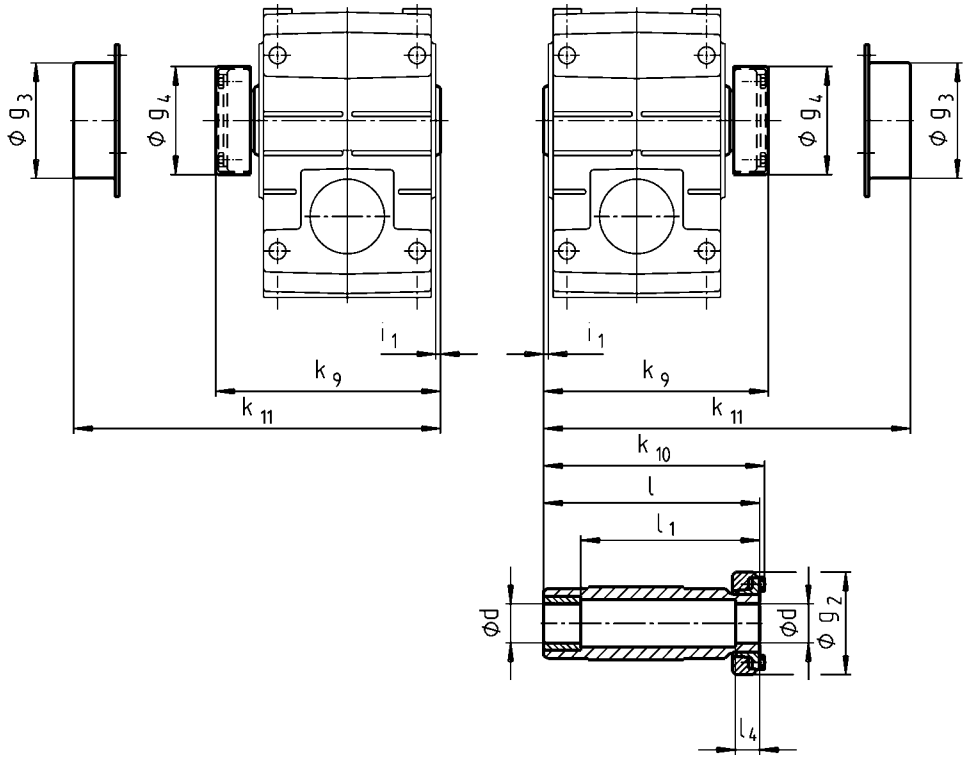

	d	g_2	g_3	g_4	i_1	k_9	k_{10}	k_{11}	l	l_1	l_4
	h6										
GSS04	25 30	72	79	76	2.5	150	148	154	142	122	26
GSS05	35	80	90	84	4.0	176	174	179	168	148	28
GSS06	40	90	100	94	5.0	202	200	204	194	164	30
GSS07	50	110	124	116		241	238	244	232	192	26

- Output flange and hollow shaft with shrink disc (output version SAK) are not possible in the same location. For additional dimensions see output version H□□.
- Ensure that the strength of the machine shaft material is adequate in shrink disc designs.
  When using typical steels (e.g. C45, 42CrMo4), the torques listed in the selection tables can be used without restriction. Please consult us if you wish to use material that is considerably weaker. Medium surface roughness Rz must not exceed 15 µm (turning is sufficient).

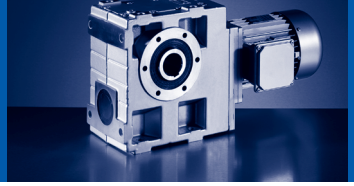

Hoseproof hollow shaft cover

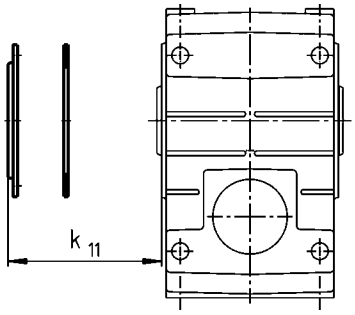

► Cover including gasket

	k_{11}
	[mm]
GSS04	9
GSS05	10
GSS06	11
GSS07	

Gearbox with 2nd output shaft end

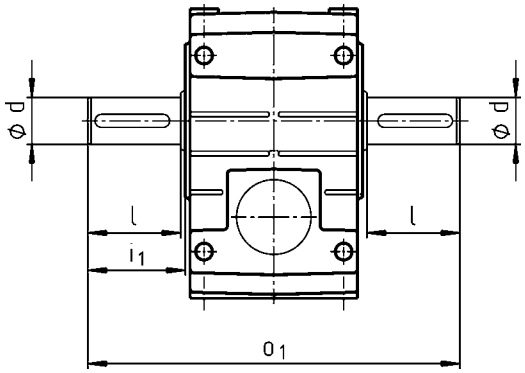

	d	l	i_1	o_1
	k6			
	[mm]	[mm]	[mm]	[mm]
GSS04	25	50	52.5	215
GSS05	30	60	64.0	260
GSS06	40	80	85.0	320
GSS07	50	100	105.0	400

Torque plate on threaded pitch circle

In position 3

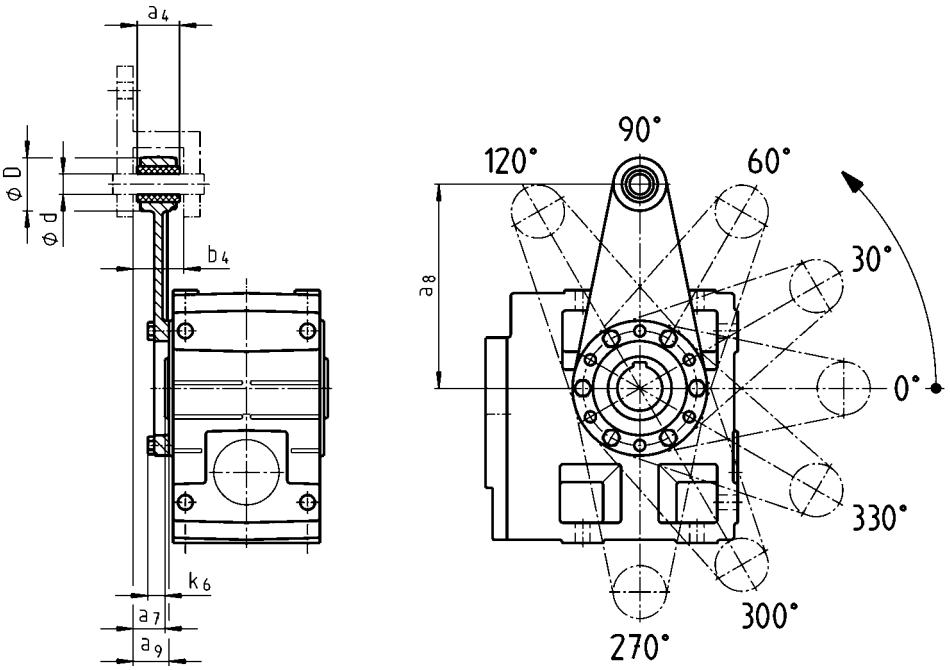

In position 5

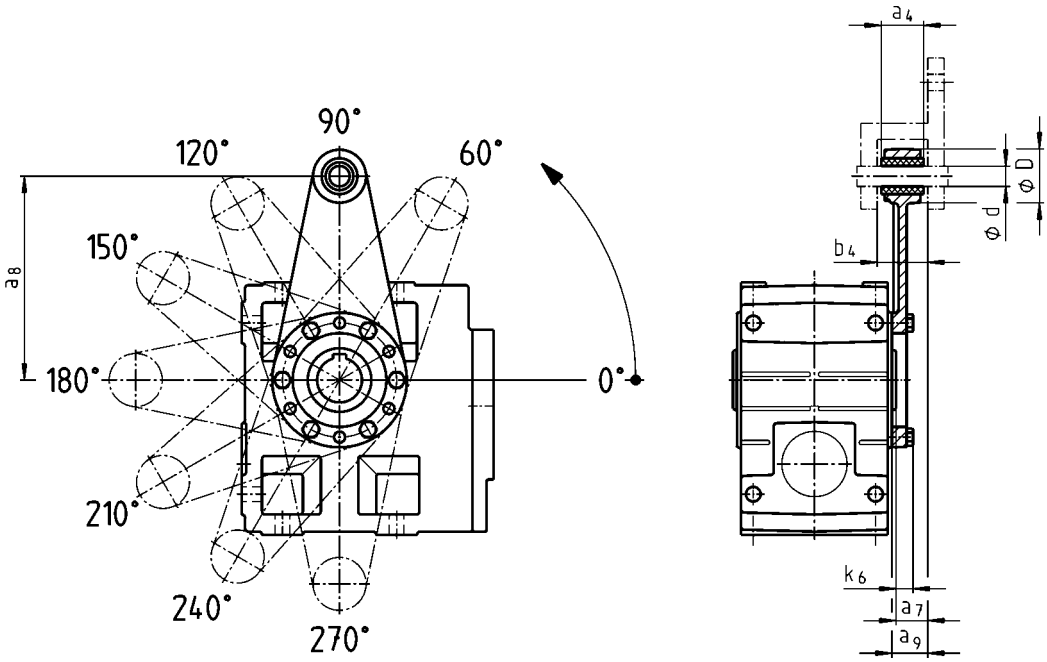

	a_4	a_7	a_8	a_9	b_4	d	D	k_6
GSS04	30	24.0	130	26.5	34.5	12	35	16
GSS05	34	23.5	160	27.5	38.5	16	45	15
GSS06	40	28.0	200	33.0	44.5	20	50	18
GSS07	46	32.5	250	37.5	50.5	25	65	21

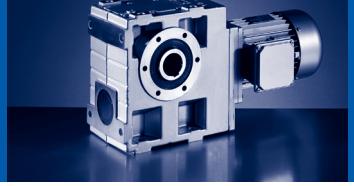

Torque plate at housing foot

In position 2, 4 or 6

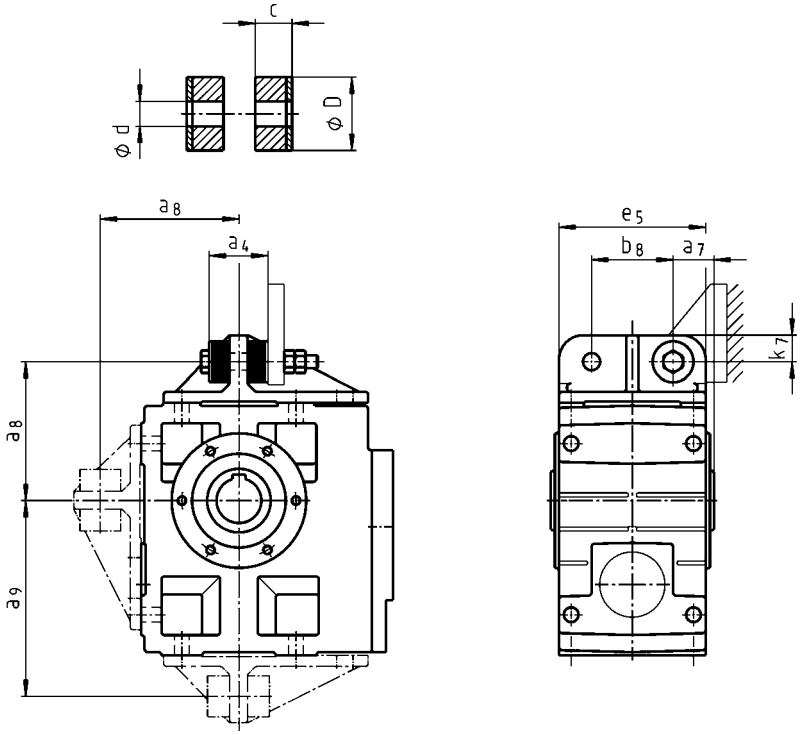

	a_4	a_7	a_8	a_9	b_8	c	d	D	e_5	k_7
GSS04	41	27.5	106	135.0	60	14.5	11	30	100	20
GSS05	45	35.0	115	160.0	70	15.0	13	40	127	25
GSS06	72	40.0	145	195.0	80	27.0	17	50	145	28
GSS07	78	50.0	170	240.0	100	28.0	21	60	180	35

Mounting set for hollow shaft circlip - Proposed design for auxiliary tools

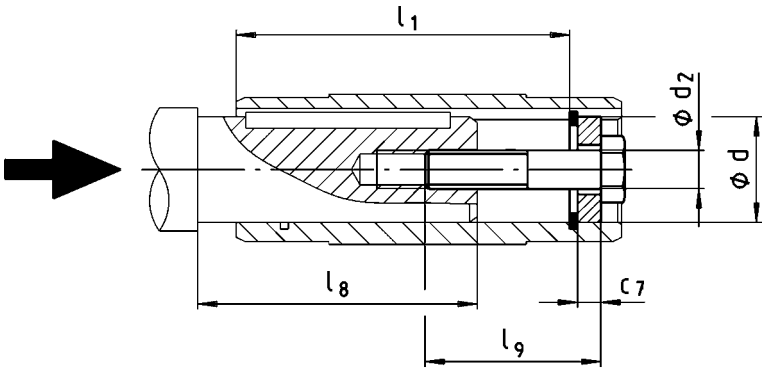

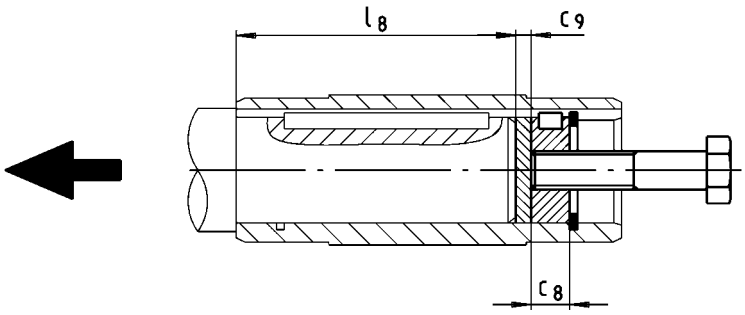

	d	l_1	d_2	l_9	c_7	c_8	c_9	$l_{8, max}$
	H7							
GSS04	25 30	100	M10	40	5	10	3	85
					6			
GSS05	30 35	124						107
			M12	50	7	12		
GSS06	40 45	140	M16	60	8	16	4	118
					9			
GSS07	50 55	175			10		5	148
			M20	80	11	20		

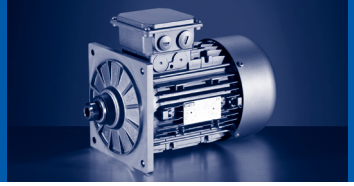

4-pole motors

Rated frequency 50 Hz

	P_N	n_N	$U_{N,\Delta}$ [2]	$I_{N,\Delta}$	$U_{N,Y}$	$I_{N,Y}$	I_a / I_N
			± 10 %		± 10 %		
	[kW]	[r/min]	[V]	[A]	[V]	[A]	
MD□□□□□□063-02	0.060	1425	230	0.42	400	0.24	3.50
MD□□□□□□063-22	0.090	1375	230	0.48	400	0.28	2.90
MD□□□□□□063-12	0.12	1425	230	0.85	400	0.49	3.10
MD□□□□□□063-32	0.18	1365	230	1.00	400	0.58	2.70
MD□□□□□□063-42	0.25	1370	230	1.40	400	0.82	2.90
MD□□□□□□071-32	0.37	1410	230	1.60	400	0.95	3.30
MD□□□□□□071-42	0.55	1405	230	2.40	400	1.40	3.50
MD□□□□□□080-32	0.75	1410	230	3.30	400	1.90	4.60
MD□□□□□□080-42	1.10	1390	230	4.80	400	2.80	4.40
MD□□□□□□090-32	1.50	1410	230	6.60	400	3.80	4.80
MD□□□□□□100-12	2.20	1440	230	9.20	400	5.30	6.00
MD□□□□□□100-32	3.00	1430	230	12.5	400	7.20	4.60
MD□□□□□□112-22	4.00	1450	230	16.1	400	9.30	6.20
MD□□□□□□112-32	5.50	1445	230 400 [3]	21.7 12.5	400	12.5	6.10
MD□□□□□□132-22	7.50	1455	230 400 [3]	28.6 16.5	400	16.5	5.90
MD□□□□□□132-32	9.20	1450	230 400 [3]	34.1 19.7	400	19.7	5.10

	M_N	M_a	M_b	cos φ	$\eta_{75\,\%}$	$\eta_{100\,\%}$	J [1]	m [1]
	[Nm]	[Nm]	[Nm]		[%]	[%]	[kgcm²]	[kg]
MD□□□□□□063-02	0.40	1.30	1.36	0.57	59.0	63.0	3.30	3.90
MD□□□□□□063-22	0.63	1.30	1.39	0.71	63.0	65.0	3.30	3.90
MD□□□□□□063-12	0.80	2.50	2.64	0.56	58.0	63.0	3.30	4.10
MD□□□□□□063-32	1.26	2.50	2.61	0.70	63.0	64.0	3.30	4.10
MD□□□□□□063-42	1.74	3.80	4.10	0.67	65.0	66.0	3.70	4.40
MD□□□□□□071-32	2.51	4.76	5.81	0.77	73.0	73.0	10.7	5.80
MD□□□□□□071-42	3.74	7.85	9.12	0.77	74.0	74.0	12.8	6.40
MD□□□□□□080-32	5.10	11.0	12.1	0.80	73.0	74.0	26.0	11.0
MD□□□□□□080-42	7.50	16.5	18.4	0.80	77.0	77.0	26.0	11.0
MD□□□□□□090-32	10.1	23.7	27.1	0.76	78.0	79.0	28.4	15.0
MD□□□□□□100-12	14.6	38.0	44.0	0.73	83.0	84.0	61.0	24.0
MD□□□□□□100-32	20.5	43.0	50.0	0.75	83.0	83.0	61.0	24.0
MD□□□□□□112-22	26.3	70.0	95.0	0.73	85.0	86.0	107	31.0
MD□□□□□□112-32	36.6	95.0	120	0.77	85.0	86.0	135	38.0
MD□□□□□□132-22	49.2	100	150	0.76	87.0	88.0	336	66.0
MD□□□□□□132-32	60.6	100	150	0.80	88.0	88.0	336	66.0

[1] Without accessories
[2] Operation at 87 Hz is possible with 4-pole motors whose ratings at 50 Hz include voltage values of Δ 230 V.
For motor sizes 112-32 to 180-42, the necessary voltage must also be indicated.
[3] Star/delta start-up at 400 V possible.

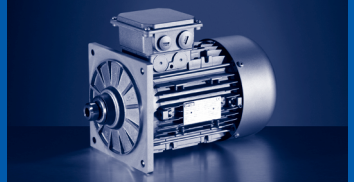

	P_N	n_N	$U_{N,\Delta}$ [2]	$I_{N,\Delta}$	$U_{N,Y}$	$I_{N,Y}$	I_a / I_N
			± 10 %		± 10 %		
	[kW]	[r/min]	[V]	[A]	[V]	[A]	
MD□□□□□160-22	11.0	1460	230 400 [3]	36.5 21.0	400	21.0	7.00
MD□□□□□160-32	15.0	1460	230 400 [3]	48.4 27.8	400	27.8	7.10
MD□□□□□180-12	18.5	1470	230 400 [3]	57.8 32.8	400	32.8	6.80
MD□□□□□180-32	22.0	1465	230 400 [3]	67.4 38.8	400	38.8	7.30
MD□□□□□180-42	30.0	1465	230 400 [3]	91.1 52.6	400	52.6	7.50
MD□□□□□225-12	37.0	1475	230 400 [3]	114 66.0	400	66.0	6.30
MD□□□□□225-22	45.0	1480	230 400 [3]	137 79.0	400	79.0	7.00

	M_N	M_a	M_b	cos φ	$\eta_{75\,\%}$	$\eta_{100\,\%}$	J [1]	m [1]
	[Nm]	[Nm]	[Nm]		[%]	[%]	[kgcm²]	[kg]
MD□□□□□160-22	71.9	150	204	0.85	89.2	89.0	610	110
MD□□□□□160-32	98.1	214	288	0.87	89.7	90.0	750	130
MD□□□□□180-12	120	260	313	0.90	90.7	90.5	1350	165
MD□□□□□180-32	144	330	360	0.90	91.2	91.0	1550	175
MD□□□□□180-42	196	548	547	0.90	91.6	91.0	1850	200
MD□□□□□225-12	240	504	528	0.88	93.0	93.0	4400	320
MD□□□□□225-22	291	698	669	0.88	94.0	94.0	5300	345

[1] Without accessories
[2] Operation at 87 Hz is possible with 4-pole motors whose ratings at 50 Hz include voltage values of Δ 230 V.
For motor sizes 112-32 to 180-42, the necessary voltage must also be indicated.
[3] Star/delta start-up at 400 V possible.

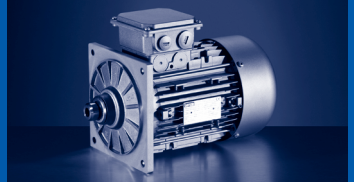

Rated frequency 60 Hz

	P_N	n_N	$U_{N,\Delta}$ [2]	$I_{N,\Delta}$	$U_{N,Y}$	$I_{N,Y}$	I_a / I_N
			± 10 %		± 10 %		
	[kW]	[r/min]	[V]	[A]	[V]	[A]	
MD□□□□□□063-02	0.075	1725	277	0.42	480	0.24	3.50
MD□□□□□□063-22	0.11	1675	277	0.48	480	0.28	2.90
MD□□□□□□063-12	0.14	1725	277	0.85	480	0.49	3.10
MD□□□□□□063-32	0.22	1665	277	1.00	480	0.58	2.70
MD□□□□□□063-42	0.31	1670	277	1.40	480	0.82	2.90
MD□□□□□□071-32	0.45	1710	277	1.60	480	0.95	3.30
MD□□□□□□071-42	0.68	1705	277	2.40	480	1.40	3.50
MD□□□□□□080-32	0.92	1710	277	3.30	480	1.90	5.10
MD□□□□□□080-42	1.30	1690	277	4.80	480	2.80	5.00
MD□□□□□□090-32	1.80	1710	277	6.60	480	3.80	5.30
MD□□□□□□100-12	2.60	1740	277	9.20	480	5.30	6.60
MD□□□□□□100-32	3.60	1730	277	12.5	480	7.20	5.20
MD□□□□□□112-22	4.80	1750	277	16.1	480	9.30	6.40
MD□□□□□□112-32	6.60	1745	277 480 [3]	21.7 12.5	480	12.5	6.70
MD□□□□□□132-22	9.00	1755	277 480 [3]	28.6 16.5	480	16.5	6.50
MD□□□□□□132-32	11.0	1750	277 480 [3]	34.1 19.7	480	19.7	5.60

	M_N	M_a	M_b	cos φ	$\eta_{75\,\%}$	$\eta_{100\,\%}$	J [1]	m [1]
	[Nm]	[Nm]	[Nm]		[%]	[%]	[kgcm²]	[kg]
MD□□□□□□063-02	0.40	1.30	1.40	0.57	60.0	63.0	3.30	3.90
MD□□□□□□063-22	0.63	1.30	1.40	0.71	63.0	65.0	3.30	3.90
MD□□□□□□063-12	0.80	2.50	2.60	0.56	58.0	63.0	3.30	4.10
MD□□□□□□063-32	1.30	2.50	2.60	0.70	63.0	64.0	3.30	4.10
MD□□□□□□063-42	1.80	3.90	4.20	0.67	64.0	66.0	3.70	4.40
MD□□□□□□071-32	2.51	4.80	5.80	0.77	74.0	73.0	10.7	5.80
MD□□□□□□071-42	3.74	8.00	9.30	0.77	76.0	74.0	12.8	6.40
MD□□□□□□080-32	5.10	11.6	13.3	0.80	79.0	79.0	26.0	11.0
MD□□□□□□080-42	7.50	17.8	21.0	0.80	79.0	79.0	26.0	11.0
MD□□□□□□090-32	10.1	24.7	30.2	0.74	80.0	82.0	28.4	15.0
MD□□□□□□100-12	14.6	38.0	47.0	0.73	84.0	85.0	61.0	24.0
MD□□□□□□100-32	20.5	43.0	54.0	0.75	87.0	88.0	61.0	24.0
MD□□□□□□112-22	26.4	58.0	102	0.73	86.0	87.0	107	31.0
MD□□□□□□112-32	36.6	95.0	130	0.76	86.0	87.0	135	38.0
MD□□□□□□132-22	49.2	100	160	0.75	88.0	88.0	336	66.0
MD□□□□□□132-32	60.6	100	160	0.79	88.0	89.0	336	66.0

[1] Without accessories
[2] Operation at 87 Hz is possible with 4-pole motors whose ratings at 60 Hz include voltage values of Δ 277 V.
For motor sizes 112-32 to 180-42, the necessary voltage must also be indicated.
[3] Star/delta start-up at 480 V possible.

	P_N	n_N	$U_{N,\Delta}$ [2]	$I_{N,\Delta}$	$U_{N,Y}$	$I_{N,Y}$	I_a / I_N
			± 10 %		± 10 %		
	[kW]	[r/min]	[V]	[A]	[V]	[A]	
MD□□□□□□160-22	13.2	1760	277 480 [3]	36.5 21.0	480	21.0	7.00
MD□□□□□□160-32	18.0	1760	277 480 [3]	48.4 27.8	480	27.8	7.10
MD□□□□□□180-12	22.2	1770	277 480 [3]	57.8 32.8	480	32.8	6.80
MD□□□□□□180-32	26.4	1765	277 480 [3]	67.4 38.8	480	38.8	7.30
MD□□□□□□180-42	36.0	1765	277 480 [3]	90.6 52.3	480	52.3	8.00
MD□□□□□□225-12	45.0	1770	277 480 [3]	114 66.0	480	66.0	6.30
MD□□□□□□225-22	54.0	1775	277 480 [3]	137 79.0	480	79.0	7.00

	M_N	M_a	M_b	cos φ	$\eta_{75\,\%}$	$\eta_{100\,\%}$	J [1]	m [1]
	[Nm]	[Nm]	[Nm]		[%]	[%]	[kgcm²]	[kg]
MD□□□□□□160-22	71.9	150	204	0.85	90.1	89.0	610	110
MD□□□□□□160-32	98.1	214	288	0.87	90.6	90.0	750	130
MD□□□□□□180-12	120	260	313	0.90	91.5	90.5	1350	165
MD□□□□□□180-32	144	330	360	0.90	92.0	91.0	1550	175
MD□□□□□□180-42	196	580	588	0.90	91.8	92.0	1850	200
MD□□□□□□225-12	240	504	528	0.88	93.0	93.0	4400	320
MD□□□□□□225-22	291	698	669	0.88	94.1	94.1	5300	345

[1] Without accessories
[2] Operation at 87 Hz is possible with 4-pole motors whose ratings at 60 Hz include voltage values of Δ 277 V.
For motor sizes 112-32 to 180-42, the necessary voltage must also be indicated.
[3] Star/delta start-up at 480 V possible.

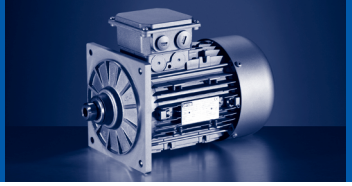

Rated frequency 87 Hz

	P_N	n_N	M_N	M_{max}	$U_{N,\Delta}$	$I_{N,\Delta}$	cos φ	$\eta_{75\,\%}$	$\eta_{100\,\%}$	J [1]	m [1]
					± 10 %						
	[kW]	[r/min]	[Nm]	[Nm]	[V]	[A]		[%]	[%]	[kgcm²]	[kg]
MD□□□□□□063-02	0.11	2535	0.40	1.60	400	0.42	0.55	62.0	66.0	3.30	3.90
MD□□□□□□063-22	0.16	2485	0.63	2.50	400	0.48	0.67	66.0	68.0	3.30	3.90
MD□□□□□□063-12	0.21	2535	0.80	1.60	400	0.85	0.55	61.0	68.0	3.30	4.10
MD□□□□□□063-32	0.33	2475	1.26	5.00	400	1.00	0.65	68.0	70.0	3.30	4.10
MD□□□□□□063-42	0.45	2480	1.74	7.00	400	1.40	0.63	66.0	69.0	3.70	4.40
MD□□□□□□071-32	0.66	2520	2.51	10.0	400	1.60	0.72	76.0	78.0	10.7	5.80
MD□□□□□□071-42	1.00	2515	3.74	15.0	400	2.40	0.74	79.0	80.0	12.8	6.40
MD□□□□□□080-32	1.35	2520	5.10	20.0	400	3.30	0.80	75.0	77.0	26.0	11.0
MD□□□□□□080-42	2.00	2500	7.50	30.0	400	4.80	0.80	81.0	82.0	26.0	11.0
MD□□□□□□090-32	2.70	2520	10.1	40.0	400	6.70	0.73	83.0	85.0	28.4	15.0
MD□□□□□□100-12	3.90	2550	14.6	60.0	400	9.20	0.71	87.0	88.0	61.0	24.0
MD□□□□□□100-32	5.40	2540	20.5	80.0	400	12.5	0.73	87.0	88.0	61.0	24.0
MD□□□□□□112-22	7.10	2560	26.3	105	400	16.1	0.71	87.0	88.0	107	31.0
MD□□□□□□112-32	9.70	2555	36.6	145	400	21.7	0.75	87.0	88.0	135	38.0
MD□□□□□□132-22	13.2	2565	49.2	200	400	28.6	0.75	90.0	90.0	336	66.0
MD□□□□□□132-32	16.2	2560	60.6	242	400	34.1	0.79	90.0	91.0	336	66.0
MD□□□□□□160-22	19.3	2565	71.9	280	400	36.5	0.85	91.7	90.0	610	110
MD□□□□□□160-32	26.4	2565	98.1	390	400	48.4	0.86	91.9	92.0	750	130
MD□□□□□□180-12	32.4	2575	120	480	400	57.8	0.89	92.8	92.0	1350	165
MD□□□□□□180-32	38.7	2560	144	572	400	67.4	0.89	92.8	92.0	1550	175
MD□□□□□□180-42	52.7	2565	196	780	400	91.1	0.89	93.0	93.0	1850	200

[1] Without accessories

2-pole motors

Rated frequency 50 Hz

	P_N	n_N	$U_{N,\Delta}$	$I_{N,\Delta}$	$U_{N,Y}$	$I_{N,Y}$	I_a / I_N
			± 10 %		± 10 %		
	[kW]	[r/min]	[V]	[A]	[V]	[A]	
MD□□□□□□063-11	0.18	2740	230	0.80	400	0.40	4.30
MD□□□□□□063-31	0.25	2710	230	1.10	400	0.60	3.70
MD□□□□□□071-11	0.37	2720	230	1.50	400	0.90	4.40
MD□□□□□□071-31	0.55	2630	230	2.40	400	1.40	3.80
MD□□□□□□080-11	0.75	2720	230	3.10	400	1.80	4.70
MD□□□□□□080-31	1.10	2720	230	4.50	400	2.60	4.70
MD□□□□□□090-11	1.50	2710	230	5.50	400	3.20	4.50
MD□□□□□□090-31	2.20	2730	230	8.30	400	4.80	3.70
MD□□□□□□100-31	3.00	2890	230	10.2	400	5.90	7.00
MD□□□□□□100-41	4.00	2840	230	14.2	400	8.30	6.60
MD□□□□□□112-31	5.50	2900	400 [2]	11.5			6.00
MD□□□□□□112-41	7.50	2890	400 [2]	16.5			6.00
MD□□□□□□132-21	9.00	2890	400 [2]	17.0			6.50

	M_N	M_a	M_b	cos φ	$\eta_{75\,\%}$	$\eta_{100\,\%}$	J [1]	m [1]
	[Nm]	[Nm]	[Nm]		[%]	[%]	[kgcm²]	[kg]
MD□□□□□□063-11	0.63	1.50	1.50	0.88	66.5	66.0	17.0	3.90
MD□□□□□□063-31	0.90	1.90	2.00	0.89	67.0	66.0	17.0	3.80
MD□□□□□□071-11	1.29	3.10	2.90	0.92	71.0	69.0	51.0	6.00
MD□□□□□□071-31	2.00	3.80	4.20	0.93	70.0	63.0	51.0	6.50
MD□□□□□□080-11	2.65	5.40	6.50	0.89	70.0	70.0	97.0	10.0
MD□□□□□□080-31	3.90	7.50	8.50	0.89	75.0	73.0	97.0	10.0
MD□□□□□□090-11	5.20	10.1	10.4	0.95	76.5	75.0	35.0	17.0
MD□□□□□□090-31	7.60	16.4	15.5	0.90	77.0	76.0	35.0	17.0
MD□□□□□□100-31	9.90	19.0	27.0	0.90	83.0	82.0	32.6	21.0
MD□□□□□□100-41	13.6	24.0	29.0	0.91	77.0	78.0	32.6	21.0
MD□□□□□□112-31	18.1	46.0	49.0	0.83	86.0	86.0	53.8	28.0
MD□□□□□□112-41	24.8	71.0	77.0	0.78	87.0	87.0	70.0	35.0
MD□□□□□□132-21	29.8	72.0	72.0	0.92	88.0	88.0	205	68.0

[1] Without accessories
[2] Star/delta start-up at 400 V possible.

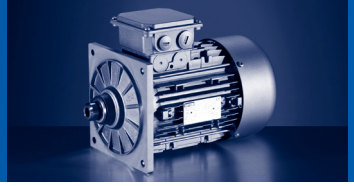

Rated frequency 60 Hz

	P_N	n_N	$U_{N,\Delta}$	$I_{N,\Delta}$	$U_{N,Y}$	$I_{N,Y}$	I_a / I_N
			± 10 %		± 10 %		
	[kW]	[r/min]	[V]	[A]	[V]	[A]	
MD□□□□□□063-11	0.22	3340	277	0.80	480	0.40	4.30
MD□□□□□□063-31	0.31	3310	277	1.10	480	0.60	3.70
MD□□□□□□071-11	0.45	3320	277	1.50	480	0.90	4.40
MD□□□□□□071-31	0.68	3230	277	2.40	480	1.40	3.80
MD□□□□□□080-11	0.92	3320	277	3.10	480	1.80	4.70
MD□□□□□□080-31	1.30	3320	277	4.50	480	2.60	4.70
MD□□□□□□090-11	1.80	3310	277	5.50	480	3.20	4.50
MD□□□□□□090-31	2.60	3330	277	8.30	480	4.80	3.70
MD□□□□□□100-31	3.60	3490	277	10.2	480	5.90	7.00
MD□□□□□□100-41	4.80	3440	277	14.2	480	8.30	6.60
MD□□□□□□112-31	6.60	3500	480 [2]	11.5			6.00
MD□□□□□□112-41	9.00	3490	480 [2]	16.5			6.00
MD□□□□□□132-21	11.0	3490	480 [2]	17.0			6.50

	M_N	M_a	M_b	cos φ	$\eta_{75\,\%}$	$\eta_{100\,\%}$	J [1]	m [1]
	[Nm]	[Nm]	[Nm]		[%]	[%]	[kgcm²]	[kg]
MD□□□□□□063-11	0.63	1.50	1.50	0.88	66.5	66.0	17.0	3.90
MD□□□□□□063-31	0.90	1.90	2.00	0.89	67.0	66.0	17.0	3.80
MD□□□□□□071-11	1.29	3.10	2.90	0.92	71.0	69.0	51.0	6.00
MD□□□□□□071-31	2.00	3.80	4.20	0.93	70.0	63.0	51.0	6.50
MD□□□□□□080-11	2.65	5.40	6.50	0.89	70.0	70.0	97.0	10.0
MD□□□□□□080-31	3.90	7.50	8.50	0.89	75.0	73.0	97.0	10.0
MD□□□□□□090-11	5.20	10.1	10.4	0.95	76.5	75.0	35.0	17.0
MD□□□□□□090-31	7.60	16.4	15.5	0.90	77.0	76.0	35.0	17.0
MD□□□□□□100-31	9.90	19.0	27.0	0.90	83.0	82.0	32.6	21.0
MD□□□□□□100-41	13.6	24.0	29.0	0.91	77.0	78.0	32.6	21.0
MD□□□□□□112-31	18.1	46.0	49.0	0.83	86.0	86.0	53.8	28.0
MD□□□□□□112-41	24.8	71.0	77.0	0.78	87.0	87.0	70.0	35.0
MD□□□□□□132-21	29.8	72.0	72.0	0.92	88.0	88.0	205	68.0

[1] Without accessories
[2] Star/delta start-up at 480 V possible.

6-pole motors

Rated frequency 50 Hz

	P_N	n_N	$U_{N,\Delta}$	$I_{N,\Delta}$	$U_{N,Y}$	$I_{N,Y}$	I_a / I_N
			± 10 %		± 10 %		
	[kW]	[r/min]	[V]	[A]	[V]	[A]	
MD□□□□□□071-13	0.18	930	230	1.10	400	0.60	3.90
MD□□□□□□071-33	0.25	930	230	1.80	400	1.10	2.80
MD□□□□□□080-13	0.37	950	230	2.20	400	1.30	4.00
MD□□□□□□080-33	0.55	930	230	2.90	400	1.70	3.50

	M_N	M_a	M_b	cos φ	$\eta_{75\,\%}$	$\eta_{100\,\%}$	J [1]	m [1]
	[Nm]	[Nm]	[Nm]		[%]	[%]	[kgcm²]	[kg]
MD□□□□□□071-13	1.80	5.00	5.00	0.66	67.0	69.0	12.5	6.50
MD□□□□□□071-33	2.50	6.60	6.60	0.66	67.0	68.0	12.5	6.50
MD□□□□□□080-13	3.70	10.1	10.7	0.63	68.0	69.0	26.0	11.0
MD□□□□□□080-33	5.60	12.2	12.8	0.70	68.0	68.0	26.0	11.0

Rated frequency 60 Hz

	P_N	n_N	$U_{N,\Delta}$	$I_{N,\Delta}$	$U_{N,Y}$	$I_{N,Y}$	I_a / I_N
			± 10 %		± 10 %		
	[kW]	[r/min]	[V]	[A]	[V]	[A]	
MD□□□□□□071-13	0.22	1130	277	1.10	480	0.60	3.90
MD□□□□□□071-33	0.30	1130	277	1.80	480	1.10	2.80
MD□□□□□□080-13	0.45	1150	277	2.20	480	1.30	4.00
MD□□□□□□080-33	0.66	1130	277	2.90	480	1.70	3.50

	M_N	M_a	M_b	cos φ	$\eta_{75\,\%}$	$\eta_{100\,\%}$	J [1]	m [1]
	[Nm]	[Nm]	[Nm]		[%]	[%]	[kgcm²]	[kg]
MD□□□□□□071-13	1.80	5.00	5.00	0.66	67.0	69.0	12.5	6.50
MD□□□□□□071-33	2.50	6.60	6.60	0.66	66.0	68.0	12.5	6.50
MD□□□□□□080-13	3.70	10.1	10.7	0.63	67.0	69.0	26.0	11.0
MD□□□□□□080-33	5.60	12.2	12.8	0.70	68.0	68.0	26.0	11.0

[1] Without accessories

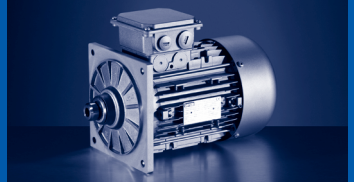

4-pole motors

Rated frequency 50 Hz

	P_N	n_N	$U_{N,\Delta}$ [2]	$I_{N,\Delta}$	$U_{N,Y}$	$I_{N,Y}$	I_a / I_N
			± 10 %		± 10 %		
	[kW]	[r/min]	[V]	[A]	[V]	[A]	
MH□□□□□□080-32	0.75	1410	230	3.10	400	1.80	5.00
MH□□□□□□090-12	1.10	1430	230	4.60	400	2.70	5.40
MH□□□□□□090-32	1.50	1435	230	5.80	400	3.30	6.30
MH□□□□□□100-12	2.20	1445	230	8.60	400	5.00	6.00
MH□□□□□□100-32	3.00	1445	230	12.1	400	7.00	6.50
MH□□□□□□112-22	4.00	1455	230	14.5	400	8.40	6.00
MH□□□□□□132-12	5.50	1470	230 400 [3]	20.6 11.9	400	11.9	6.10
MH□□□□□□132-22	7.50	1460	230 400 [3]	27.0 15.6	400	15.6	8.50
MH□□□□□□160-22	11.0	1470	230 400 [3]	37.7 21.8	400	21.8	8.00
MH□□□□□□160-32	15.0	1470	230 400 [3]	50.3 29.1	400	29.1	8.20
MH□□□□□□180-12	18.5	1475	230 400 [3]	58.8 34.0	400	34.0	8.40
MH□□□□□□180-32	22.0	1470	230 400 [3]	68.9 39.8	400	39.8	7.80
MH□□□□□□180-42	30.0	1465	230 400 [3]	93.8 53.9	400	53.9	7.00
MH□□□□□□225-12	37.0	1483	230 400 [3]	113	400	65.0	7.50
MH□□□□□□225-22	45.0	1480	230 400 [3]	137	400	79.0	7.60

	M_N	M_a	M_b	cos φ	$\eta_{50\,\%}$	$\eta_{75\,\%}$	$\eta_{100\,\%}$	J [1]	m [1]
	[Nm]	[Nm]	[Nm]		[%]	[%]	[%]	[kgcm²]	[kg]
MH□□□□□□080-32	5.08	12.0	12.1	0.84	74.9	79.6	79.6	28.0	11.0
MH□□□□□□090-12	7.35	20.3	24.2	0.76	77.4	81.6	82.0	32.0	16.0
MH□□□□□□090-32	10.0	33.0	34.0	0.76	82.2	83.4	82.8	36.0	18.0
MH□□□□□□100-12	14.5	48.0	55.0	0.80	85.4	86.7	86.3	61.0	24.0
MH□□□□□□100-32	19.8	67.0	76.0	0.73	83.8	85.6	85.5	66.0	26.5
MH□□□□□□112-22	26.3	81.0	100	0.80	86.3	88.2	88.3	135	38.0
MH□□□□□□132-12	35.7	90.0	108	0.77	88.2	89.3	89.2	290	59.0
MH□□□□□□132-22	49.1	110	175	0.79	87.6	88.9	88.7	336	66.0
MH□□□□□□160-22	71.5	164	243	0.82	89.4	90.0	89.8	570	109
MH□□□□□□160-32	97.4	224	292	0.82	90.2	90.8	90.6	760	124
MH□□□□□□180-12	120	359	371	0.86	90.8	91.4	91.2	1390	175
MH□□□□□□180-32	143	400	372	0.87	91.4	92.0	91.6	1440	180
MH□□□□□□180-42	196	469	469	0.87	91.9	92.5	92.3	1850	200
MH□□□□□□225-12	238	620	620	0.87	94.0	94.6	94.3	4610	395
MH□□□□□□225-22	290	698	669	0.88	93.7	94.5	94.3	5300	415

[1] Without accessories
[2] Operation at 87 Hz is possible with 4-pole motors whose ratings at 50 Hz include voltage values of Δ 230 V.
For motor sizes 112-32 to 180-42, the necessary voltage must also be indicated.
[3] Star/delta start-up at 400 V possible.

Rated frequency 60 Hz

	P_N	n_N	$U_{N,\Delta}$ [2]	$I_{N,\Delta}$	$U_{N,Y}$	$I_{N,Y}$	I_a / I_N
			± 10 %		± 10 %		
	[kW]	[r/min]	[V]	[A]	[V]	[A]	
MH□□□□□□080-32	0.92	1710	277	3.10	480	1.80	5.40
MH□□□□□□090-12	1.30	1730	277	4.60	480	2.70	5.80
MH□□□□□□090-32	1.80	1735	277	5.80	480	3.30	6.70
MH□□□□□□100-12	2.60	1745	277	8.60	480	5.00	6.40
MH□□□□□□100-32	3.60	1745	277	12.1	480	7.00	7.00
MH□□□□□□112-22	4.80	1755	277	14.5	480	8.40	6.40
MH□□□□□□132-12	6.60	1770	277 480 [3]	20.6 11.9	480	11.9	6.50
MH□□□□□□132-22	9.00	1760	277 480 [3]	27.0 15.6	480	15.6	9.10
MH□□□□□□160-22	13.2	1770	277 480 [3]	37.7 21.8	480	21.8	8.60
MH□□□□□□160-32	18.0	1770	277 480 [3]	50.3 29.1	480	29.1	9.10
MH□□□□□□180-12	22.2	1775	277 480 [3]	58.8 34.0	480	34.0	8.90
MH□□□□□□180-32	26.4	1770	277 480 [3]	68.9 39.8	480	39.8	8.20
MH□□□□□□180-42	36.0	1765	277 480 [3]	93.8 53.9	480	53.9	7.40
MH□□□□□□225-12	45.0	1783	277 480 [3]	113	480	65.0	7.50
MH□□□□□□225-22	54.0	1780	277 480 [3]	137	480	79.0	7.60

	M_N	M_a	M_b	cos φ	$\eta_{50\,\%}$	$\eta_{75\,\%}$	$\eta_{100\,\%}$	J [1]	m [1]
	[Nm]	[Nm]	[Nm]		[%]	[%]	[%]	[kgcm²]	[kg]
MH□□□□□□080-32	5.14	12.6	13.3	0.84	77.3	82.5	82.5	28.0	11.0
MH□□□□□□090-12	7.18	22.0	26.0	0.76	80.4	84.0	84.0	32.0	16.0
MH□□□□□□090-32	9.91	35.0	37.0	0.76	82.3	84.3	84.0	36.0	18.0
MH□□□□□□100-12	14.2	52.0	60.0	0.80	85.7	87.5	87.5	61.0	24.0
MH□□□□□□100-32	19.7	73.0	84.0	0.73	84.7	87.8	87.5	66.0	26.5
MH□□□□□□112-22	26.1	90.0	110	0.80	87.4	89.5	89.5	135	38.0
MH□□□□□□132-12	35.6	97.0	120	0.77	89.0	89.5	90.3	290	59.0
MH□□□□□□132-22	48.8	120	192	0.79	88.2	89.5	89.5	336	66.0
MH□□□□□□160-22	71.2	171	256	0.81	90.6	91.2	91.0	570	109
MH□□□□□□160-32	97.1	243	301	0.82	91.4	92.0	92.4	760	124
MH□□□□□□180-12	119	370	382	0.86	92.0	92.6	92.4	1390	175
MH□□□□□□180-32	142	413	384	0.87	92.1	93.2	93.0	1440	180
MH□□□□□□180-42	195	487	604	0.87	93.1	93.7	93.5	1850	200
MH□□□□□□225-12	241	620	620	0.87	94.2	94.8	94.8	4610	395
MH□□□□□□225-22	290	698	669	0.88	94.1	94.8	94.7	5300	415

[1] Without accessories
[2] Operation at 87 Hz is possible with 4-pole motors whose ratings at 60 Hz include voltage values of Δ 277 V.
For motor sizes 112-32 to 180-42, the necessary voltage must also be indicated.
[3] Star/delta start-up at 480 V possible.

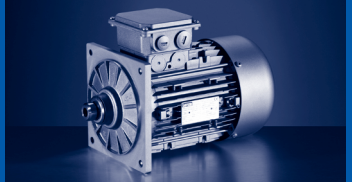

Rated frequency 87 Hz

	P_N	n_N	M_N	M_{max}	$U_{N,\Delta}$	$I_{N,\Delta}$	cos φ	$\eta_{50\,\%}$	$\eta_{75\,\%}$	$\eta_{100\,\%}$	J [1]	m [1]
					± 10 %							
	[kW]	[r/min]	[Nm]	[Nm]	[V]	[A]		[%]	[%]	[%]	[kgcm²]	[kg]
MH□□□□□□080-32	1.35	2520	5.12	20.0	400	3.10	0.84	76.9	81.6	83.5	28.0	11.0
MH□□□□□□090-12	2.00	2540	7.52	30.0	400	4.60	0.78	82.0	84.9	86.5	32.0	16.0
MH□□□□□□090-32	2.70	2545	10.1	40.0	400	5.80	0.76	82.8	85.5	86.0	36.0	18.0
MH□□□□□□100-12	3.90	2555	14.6	60.0	400	8.60	0.83	87.4	89.6	90.0	61.0	24.0
MH□□□□□□100-32	5.40	2555	20.2	80.0	400	12.1	0.76	84.3	87.9	88.5	66.0	26.5
MH□□□□□□112-22	7.10	2565	26.4	106	400	14.5	0.83	87.9	90.2	90.9	135	38.0
MH□□□□□□132-12	9.70	2580	35.9	144	400	20.6	0.82	89.6	91.4	91.8	290	59.0
MH□□□□□□132-22	13.2	2570	49.1	196	400	27.0	0.82	88.3	90.1	90.7	336	66.0
MH□□□□□□160-22	19.4	2580	71.8	287	400	37.7	0.81	89.4	91.0	91.6	570	109
MH□□□□□□160-32	26.4	2580	97.7	391	400	50.3	0.81	89.4	91.0	91.6	760	124
MH□□□□□□180-12	32.5	2585	120	480	400	58.8	0.86	90.9	92.2	92.8	1390	175
MH□□□□□□180-32	38.7	2580	143	573	400	68.9	0.87	91.7	92.9	93.4	1440	180
MH□□□□□□180-42	52.7	2575	196	782	400	93.8	0.87	91.4	92.7	93.2	1850	200
MH□□□□□□225-12	64.0	2593	236	920	400	113	0.87	93.1	94.4	94.8	4610	395
MH□□□□□□225-22	78.0	2590	288	1150	400	137	0.85	93.0	94.3	94.7	5300	415

[1] Without accessories

MD/MH three-phase AC motors are designed for operation on a fixed mains and for inverter operation.
For operation at 50 Hz, the motors should be operated in a Δconnection at 230 V or in a star connection at 400 V.
For inverter operation, the base frequency has been set at 87 Hz at a rated voltage of 400 V in a Δconnection.

In the standard version, the motors are connected in the terminal box. As an option, the motors are also available with the plug-in connectors described on the following pages as long as the permissible ratings are not exceeded.

Motor terminal box

Motor terminal box - built-on accessories assignment: 4-pole / 6-pole motors

	M□□MA XX	M□□MA RS M□□MA IG M□□MA AG	M□□MA ZE M□□MA HA	M□□MA LL	M□□MA LZ M□□MA LH
MDSMA□□063-02 MDSMA□□063-22	KK1	KK2			
MD□MA□□063-12 MD□MA□□063-32 MD□MA□□063-42	KK1	KK2			
MD□MA□□071-32 MD□MA□□071-42 MD□MA□□071-13 MD□MA□□071-33	KK1	KK2	KK2	KK1	KK1
MD□MA□□080-13 M□□MA□□080-32 MD□MA□□080-33 M□□MA□□080-42	KK1	KK2	KK2	KK1	KK1
M□□MA□□090-12 M□□MA□□090-32	KK1	KK2	KK2	KK1	KK1
M□□MA□□100-12 M□□MA□□100-32	KK1	KK2	KK2	KK2	KK2
M□□MA□□112-22 M□□MA□□112-32	KK1	KK2	KK2	KK1	KK1
M□□MA□□132-12 M□□MA□□132-22 M□□MA□□132-32	KK1	KK3	KK3	KK1	KK1
M□□MA□□160-22 M□□MA□□160-32	KK3	KK3			
M□□MA□□180-12 M□□MA□□180-32 M□□MA□□180-42 M□□MA□□180-42	KK3	KK3			
M□□MA□□225-12 M□□MA□□225-22	KK3	KK3			

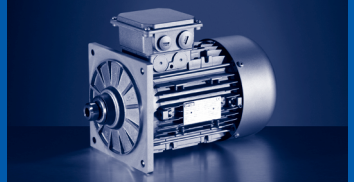

	M□□MA BR	M□□MA BS M□□MA BI M□□MA BA	M□□MA BZ M□□MA BH	M□□MA BL
MDSMA□□063-02 MDSMA□□063-22	KK2	KK3		
MD□MA□□063-12 MD□MA□□063-32 MD□MA□□063-42	KK2	KK3		
MD□MA□□071-32 MD□MA□□071-42 MD□MA□□071-13 MD□MA□□071-33	KK2	KK3	KK2	KK2
MD□MA□□080-13 M□□MA□□080-32 MD□MA□□080-33 M□□MA□□080-42	KK2	KK3	KK2	KK2
M□□MA□□090-12 M□□MA□□090-32	KK2	KK3	KK2	KK2
M□□MA□□100-12 M□□MA□□100-32	KK2	KK3	KK2	KK2
M□□MA□□112-22 M□□MA□□112-32	KK2	KK3	KK2	KK2
M□□MA□□132-12 M□□MA□□132-22 M□□MA□□132-32	KK3	KK3	KK3	KK3
M□□MA□□160-22 M□□MA□□160-32	KK3	KK3		
M□□MA□□180-12 M□□MA□□180-32 M□□MA□□180-42	KK3	KK3		
M□□MA□□225-12 M□□MA□□225-22	KK3	KK3		

Motor terminal box - built-on accessories assignment: 2-pole motors

	M□□MA XX	M□□MA ZE	M□□MA LL	M□□MA LZ
MD□MA□□063-11 MD□MA□□063-31	KK1			
MD□MA□□071-11 MD□MA□□071-31	KK1	KK2	KK1	KK2
MD□MA□□080-11 MD□MA□□080-31	KK1	KK2	KK1	KK2
MD□MA□□090-31 MD□MA□□090-11	KK1	KK2	KK1	KK2
MD□MA□□100-31 MD□MA□□100-41	KK1	KK2	KK1	KK2
MD□MA□□112-31 MD□MA□□112-41	KK1	KK2	KK1	KK2
MD□MA□□132-21	KK1	KK3	KK1	KK3

	M□□MA BR	M□□MA BZ	M□□MA BL
MD□MA□□063-11 MD□MA□□063-31	KK2		
MD□MA□□071-11 MD□MA□□071-31	KK2	KK2	
MD□MA□□080-11 MD□MA□□080-31	KK2	KK2	KK2
MD□MA□□090-31 MD□MA□□090-11	KK2	KK2	KK2
MD□MA□□100-31 MD□MA□□100-41	KK2	KK2	KK2
MD□MA□□112-31 MD□MA□□112-41	KK2	KK2	KK2
MD□MA□□132-21	KK3	KK3	KK3

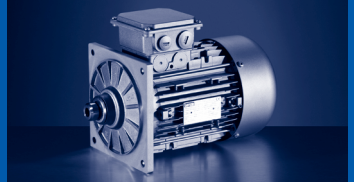

Motor terminal box with ICN connector

The connectors can be rotated through 270° and fitted with a bayonet fixing. As the connector fixing is also compatible with conventional union nuts, existing mating connectors can continue to be used without difficulty. The motor connection is determined in the terminal box and must be checked before commissioning.

Design			ICN 6-pole	ICN 8-pole
Number of power contacts			3	
Number of earthing contacts			1	
Number of signalling contacts Brake/rectifier supply voltage			2	
TKO thermal contacts supply voltage				2
Max. current	I_{max}	[A]	20.0	
Socket identifier for Lenze system cables Counter plug			M04	M08

Motor terminal box with ICN connectors - built-on accessories assignment: 4-pole / 6-pole motors

	M□□MA XX	M□□MA RS M□□MA IG M□□MA AG	M□□MA ZE M□□MA HA	M□□MA LL	M□□MA LZ M□□MA LH
MDSMA□□063-02 MDSMA□□063-22	KK1	KK2			
MD□MA□□063-12 MD□MA□□063-32 MD□MA□□063-42	KK1	KK2			
MD□MA□□071-32 MD□MA□□071-42 MD□MA□□071-13 MD□MA□□071-33	KK1	KK2	KK2	KK1	KK2
MD□MA□□080-13 M□□MA□□080-32 MD□MA□□080-33 M□□MA□□080-42	KK1	KK2	KK2	KK1	KK2
M□□MA□□090-12 M□□MA□□090-32	KK1	KK2	KK2	KK1	KK2
M□□MA□□100-12 M□□MA□□100-32	KK1	KK2	KK2	KK2	KK2
M□□MA□□112-22 M□□MA□□112-32	KK1	KK2	KK2	KK1	KK2
M□□MA□□132-12 M□□MA□□132-22 M□□MA□□132-32	KK1	KK3	KK3	KK1	KK3

	M□□MA BR	M□□MA BS M□□MA BI M□□MA BA	M□□MA BZ M□□MA BH	M□□MA BL
MDSMA□□063-02 **MDSMA□□063-22**	KK2	KK2		
MD□MA□□063-12 **MD□MA□□063-32** **MD□MA□□063-42**	KK2	KK2		
MD□MA□□071-32 **MD□MA□□071-42** **MD□MA□□071-13** **MD□MA□□071-33**	KK2	KK2	KK2	KK2
MD□MA□□080-13 **M□□MA□□080-32** **MD□MA□□080-33** **M□□MA□□080-42**	KK2	KK2	KK2	KK2
M□□MA□□090-12 **M□□MA□□090-32**	KK2	KK2	KK2	KK2
M□□MA□□100-12 **M□□MA□□100-32**	KK2	KK2	KK2	KK2
M□□MA□□112-22 **M□□MA□□112-32**	KK2	KK2	KK2	KK2
M□□MA□□132-12 **M□□MA□□132-22** **M□□MA□□132-32**	KK3	KK3	KK3	KK3

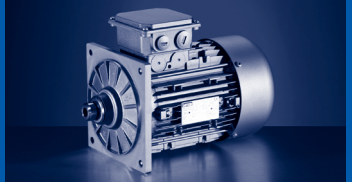

Motor terminal box with ICN connectors - built-on accessories assignment: 2-pole motors

	M□□MA XX	M□□MA ZE	M□□MA LL	M□□MA LZ
MD□MA□□063-11 MD□MA□□063-31	KK1			
MD□MA□□071-11 MD□MA□□071-31	KK1	KK2	KK1	KK2
MD□MA□□080-11 MD□MA□□080-31	KK1	KK2	KK1	KK2
MD□MA□□090-31 MD□MA□□090-11	KK1	KK2	KK1	KK2
MD□MA□□100-31 MD□MA□□100-41	KK1	KK2	KK1	KK2
MD□MA□□112-31 MD□MA□□112-41	KK1	KK2	KK1	KK2
MD□MA□□132-21	KK1	KK3	KK1	KK3

	M□□MA BR	M□□MA BZ	M□□MA BL
MD□MA□□063-11 MD□MA□□063-31	KK2		
MD□MA□□071-11 MD□MA□□071-31	KK2	KK2	
MD□MA□□080-11 MD□MA□□080-31	KK2	KK2	KK2
MD□MA□□090-31 MD□MA□□090-11	KK2	KK2	KK2
MD□MA□□100-31 MD□MA□□100-41	KK2	KK2	KK2
MD□MA□□112-31 MD□MA□□112-41	KK2	KK2	KK2
MD□MA□□132-21	KK3	KK3	KK3

Motor terminal box with HAN-10 E connector

In the case of the rectangular HAN-10E plug-in connectors, all six ends of the three winding phases are taken out to the power contacts. The motor circuit is therefore determined in the mating connector.

Design			HAN-10E
Number of power contacts			6
Number of earthing contacts			1
Number of signalling contacts Brake/rectifier supply voltage TKO thermal contacts supply voltage			 2 2
Max. current	I_{max}	[A]	16.0
Socket identifier for Lenze system cables Counter plug			H10 ... H13

Motor terminal box with HAN modular connector

The connector is available with two different power modules (16 A or 40 A), depending on the rated motor current. The motor connection is determined in the terminal box and must be checked before commissioning.

Design			HAN modular
Number of power contacts			3
Number of earthing contacts			1
Number of signalling contacts Brake/rectifier supply voltage Rectifier DC switching contacts supply voltage TKO thermal contacts supply voltage			 2 2 2
Max. current	I_{max}	[A]	16.0 40.0
Socket identifier for Lenze system cables Counter plug			H07 ... H15

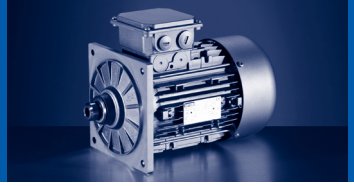

Motor terminal box with HAN connectors - built-on accessories assignment: 4-pole / 6-pole motors

	M□□MA XX M□□MA BR	M□□MA ZE M□□MA HA M□□MA BZ M□□MA BH	M□□MA LL M□□MA BL	M□□MA LZ M□□MA LH
MDSMA□□063-02 **MDSMA□□063-22**	HAN-10E HAN modular			
MD□MA□□063-12 **MD□MA□□063-32** **MD□MA□□063-42**	HAN-10E HAN modular			
MD□MA□□071-32 **MD□MA□□071-13** **MD□MA□□071-42** **MD□MA□□071-33**	HAN-10E HAN modular	HAN-10E HAN modular	HAN-10E HAN modular	HAN-10E HAN modular
MD□MA□□080-13 **M□□MA□□080-32** **MD□MA□□080-33** **M□□MA□□080-42**	HAN-10E HAN modular	HAN-10E HAN modular	HAN-10E HAN modular	HAN-10E HAN modular
M□□MA□□090-12 **M□□MA□□090-32**	HAN-10E HAN modular	HAN-10E HAN modular	HAN-10E HAN modular	HAN-10E HAN modular
M□□MA□□100-12 **M□□MA□□100-32**	HAN-10E HAN modular	HAN-10E HAN modular	HAN-10E HAN modular	HAN-10E HAN modular
M□□MA□□112-22 **M□□MA□□112-32**	HAN-10E HAN modular	HAN-10E HAN modular	HAN-10E HAN modular	HAN-10E HAN modular
M□□MA□□132-12 **M□□MA□□132-22** **M□□MA□□132-32**	HAN modular	HAN modular	HAN modular	HAN modular
M□□MA□□160-22 **M□□MA□□160-32**	HAN modular			

Motor terminal box with HAN connectors - built-on accessories assignment: 2-pole motors

	M□□MA XX M□□MA BR	M□□MA ZE M□□MA BZ	M□□MA LL M□□MA BL	M□□MA LZ
MD□MA□□063-11 **MD□MA□□063-31**	HAN-10E HAN modular			
MD□MA□□071-11 **MD□MA□□071-31**	HAN-10E HAN modular	HAN-10E HAN modular	HAN-10E HAN modular	HAN-10E HAN modular
MD□MA□□080-11 **MD□MA□□080-31**	HAN-10E HAN modular	HAN-10E HAN modular	HAN-10E HAN modular	HAN-10E HAN modular
MD□MA□□090-31 **MD□MA□□090-11**	HAN-10E HAN modular	HAN-10E HAN modular	HAN-10E HAN modular	HAN-10E HAN modular
MD□MA□□100-31 **MD□MA□□100-41**	HAN-10E HAN modular	HAN-10E HAN modular	HAN-10E HAN modular	HAN-10E HAN modular
MD□MA□□112-31 **MD□MA□□112-41**	HAN-10E HAN modular	HAN-10E HAN modular	HAN-10E HAN modular	HAN-10E HAN modular
MD□MA□□132-21	HAN modular	HAN modular	HAN modular	HAN modular

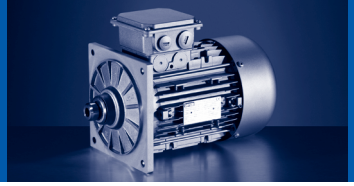

Connector for feedback

ICN connector

All encoder systems (apart from IG128-24V-H) are also available with an ICN connector fixed to the motor terminal box for exceptionally fast commissioning. The connectors are fitted with a bayonet fixing, which is also compatible with conventional union nuts. Existing mating connectors can therefore continue to be used without difficulty.

Design		Resolver	Incremental encoder SinCos absolute value encoder
Number of signalling contacts		12	
Coding	[°]	0	20
Socket identifier for Lenze system cables Counter plug		F05	F06

Connector for IG128-24V-H

As a standard this incremental encoder is equipped with a connection cable of about 0.5 m length and with a common industry standard M12 connector at its end.

Design		Incremental encoder IG128-24V-H
Number of signalling contacts		4
Coding	[°]	0

ICN connector for blower

ICN connector

The blower is also optionally available with an ICN connector fixed to the terminal box of the blower for exceptionally fast commissioning. The connectors are fitted with a bayonet fixing, which is also compatible with conventional union nuts. Existing counter plugs can therefore continue to be used without difficulty.

Design	Blower 1-ph	Blower 3-ph
Number of power contacts	6	
Number of earthing contacts	1	
Socket identifier for Lenze system cables Counter plug	L04	L06

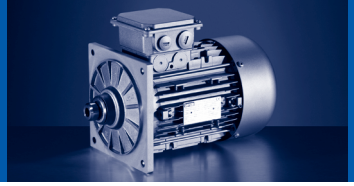

Decentralised frequency inverter 8200 motec

Assignment of motor to frequency inverter

Rated frequency 50 Hz

Rated power	Product key		
	Motor		Inverter
P_N			
[kW]			
0.12	MD□□□□□□063-12		E82MV251_2B
0.18	MD□□□□□□063-32		
0.25	MD□□□□□□063-42		
0.37	MD□□□□□□071-32		E82MV371_2B
0.55	MD□□□□□□071-42		E82MV551_4B
0.75	MD□□□□□□080-32	MH□□□□□□080-32	E82MV751_4B
1.10	MD□□□□□□080-42	MH□□□□□□090-12	E82MV152_4B
1.50	MD□□□□□□090-32	MH□□□□□□090-32	
2.20	MD□□□□□□100-12	MH□□□□□□100-12	E82MV222_4B
3.00	MD□□□□□□100-32	MH□□□□□□100-32	E82MV302_4B
4.00	MD□□□□□□112-22	MH□□□□□□112-22	E82MV402_4B
5.50	MD□□□□□□112-32	MH□□□□□□132-12	E82MV552_4B
7.50	MD□□□□□□132-22	MH□□□□□□132-22	E82MV752_4B

Rated frequency 87 Hz

Rated power	Product key		
	Motor		Inverter
P_N			
[kW]			
0.21	MD□□□□□□063-12		E82MV551_4B
0.33	MD□□□□□□063-32		
0.45	MD□□□□□□063-42		
0.66	MD□□□□□□071-32		E82MV751_4B
1.00	MD□□□□□□071-42		E82MV152_4B
1.35	MD□□□□□□080-32	MH□□□□□□080-32	
2.00	MD□□□□□□080-42	MH□□□□□□090-12	E82MV222_4B
2.70	MD□□□□□□090-32	MH□□□□□□090-32	E82MV302_4B
3.90	MD□□□□□□100-12	MH□□□□□□100-12	E82MV402_4B
5.40	MD□□□□□□100-32	MH□□□□□□100-32	E82MV552_4B
7.10	MD□□□□□□112-22	MH□□□□□□112-22	E82MV752_4B

Features and assignments

Three-phase AC motors can be fitted with a spring-applied brake. This is activated after the supply voltage is switched off (closed-circuit principle). For optimum adjustment of the brake motor to the application, a range of braking torques and control versions is available for every motor frame size. For applications with very high operating frequencies the brake is also available in a LongLife version, with reinforced mechanical brake components.

Features

Versions
- **Standard**

1 x 10^6 Repeating switching cycles
1 x 10^6 Reversing switching cycles
- **LongLife**

10 x 10^6 Repeating switching cycles
15 x 10^6 Reversing switching cycles

Control
- DC supply
- AC supply via rectifier in the terminal box

Enclosure
- Without manual release IP55
- With manual release IP54

Friction lining
- Non-asbestos, low wearing

Options
- Manual release
- UL/CSA approval
- Noise-reduced

Motor - brake assignment: 4-pole motors

Design	Standard		LongLife	
	Size	Rated torque	Size	Rated torque
	Brake		Brake	
		M_k		M_k
		[Nm]		[Nm]
MDSMAB□063-02 MDSMAB□063-22 MD□MAB□063-12 MD□MAB□063-32 MD□MAB□063-42	06 06	2.50 4.00	06	4.00
MD□MAB□071-32	06 06 08	2.50 4.00 3.50	06 08	4.00 3.50
MD□MAB□071-42	06 06 08 08	2.50 4.00 3.50 8.00	06 08 08	4.00 3.50 8.00
M□□MAB□080-32	08 08 10	3.50 8.00 7.00	08 10	8.00 7.00
M□□MAB□080-42	08 08 10 10	3.50 8.00 7.00 16.0	08 10 10	8.00 7.00 16.0

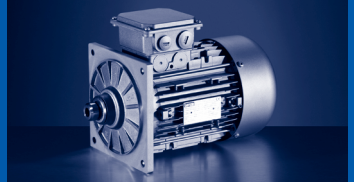

Design	Standard		LongLife	
	Size	Rated torque	Size	Rated torque
	Brake		Brake	
		M_k		M_k
		[Nm]		[Nm]
M□□MAB□090-12 M□□MAB□090-32	08 08 10 10 10	3.50 8.00 7.00 16.0 23.0	08 10 10	8.00 7.00 16.0
M□□MAB□100-12	10 10 12 12	7.00 16.0 14.0 32.0	10 12 12	16.0 14.0 32.0
M□□MAB□100-32	10 10 12 12 12	7.00 16.0 14.0 32.0 46.0		
M□□MAB□112-22 M□□MAB□112-32	12 12 14 14	14.0 32.0 35.0 60.0		
M□□MAB□132-12	14 14 16 16	35.0 60.0 60.0 80.0		
M□□MAB□132-22 M□□MAB□132-32	14 14 16 16 16	35.0 60.0 60.0 80.0 100		
M□□MAB□160-22	16 16 18 18	60.0 80.0 80.0 150		
M□□MAB□160-32	18 18 18	80.0 150 200		
M□□MAB□180-12	18 18 20 20	80.0 150 145 260		
M□□MAB□180-32	18 18 20 20 20	80.0 150 145 260 315		
M□□MAB□180-42	18 18 20 20 20 20	80.0 150 145 260 315 400		

Design	Standard		LongLife	
	Size	Rated torque	Size	Rated torque
	Brake		Brake	
		M_k		M_k
		[Nm]		[Nm]
M□□MAB□225-12	25 25 25	265 400 490		
M□□MAB□225-22	25 25 25 25	265 400 490 600		

Motor - brake assignment: 2-pole motors

Design	Standard		LongLife	
	Size	Rated torque	Size	Rated torque
	Brake		Brake	
		M_k		M_k
		[Nm]		[Nm]
MD□MAB□063-11 MD□MAB□063-31	06 06	2.50 4.00	06 06	2.50 4.00
MD□MAB□071-11 MD□MAB□071-31	06 06 08	2.50 4.00 3.50	06 08	4.00 3.50
MD□MAB□080-11 MD□MAB□080-31 MD□MAB□090-11	08 08 10	3.50 8.00 7.00	08 10	8.00 7.00
MD□MAB□090-31	08 08 10 10	3.50 8.00 7.00 16.0	08 10 10	8.00 7.00 16.0
MD□MAB□100-31 MD□MAB□100-41	12 12	14.0 32.0	12 12	14.0 32.0
MD□MAB□112-31 MD□MAB□112-41	12 12 14 14	14.0 32.0 35.0 60.0		
MD□MAB□132-21	14 14 16 16	35.0 60.0 60.0 80.0		

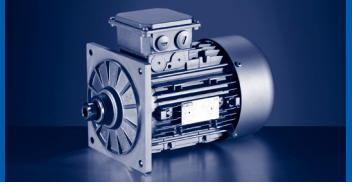

Motor - brake assignment: 6-pole motors

Design	Standard		LongLife	
	Size	Rated torque	Size	Rated torque
	Brake		Brake	
		M_k		M_k
		[Nm]		[Nm]
MD□MAB□071-13 **MD□MAB□071-33**	**06** **06** **08**	2.50 4.00 3.50	**06** **08**	4.00 3.50
MD□MAB□080-13 **MD□MAB□080-33**	**08** **08** **10**	3.50 8.00 7.00	**08** **10**	8.00 7.00

Brake connection

Direct connection without rectifier

If the brake is activated directly without a rectifier, a freewheeling diode or a spark suppressor is required to protect against induction peaks.

- Supply voltages
  DC 24 V
  DC 180 V
  DC 205 V

Connection via mains voltage with brake rectifier

If the brake is not directly supplied with DC voltage, a rectifier is required. This is included in the scope of supply and is located in the terminal box of the motor. The rectifier converts the AC voltage of the connection into DC voltage. The following rectifiers are available:

Half-wave rectifier, 6-pole

- Ratio of supply voltage to brake coil voltage = 2.22
- Approved by UL/CSA
- Supply voltages
  AC 230 V
  AC 277 V
  AC 400 V
  AC 460 V
  AC 480 V

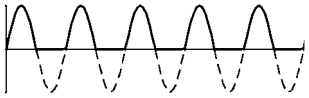

Bridge rectifier, 6-pole

- Ratio of supply voltage to brake coil voltage = 1.11
- Supply voltage
  AC 230 V

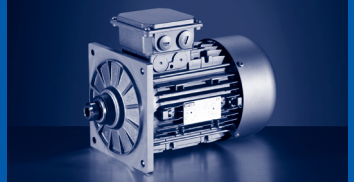

Bridge/half-wave rectifier, 6-pole

- Ratio of supply voltage to brake coil voltage
  up to overexcitation time = 1.11
  beyond overexcitation time = 2.22

Supply voltages:

- AC 230 V
- AC 277 V
- AC 400 V

During the switching operation the bridge/half-wave rectifier functions as a bridge rectifier for the overexcitation time $t_ü$ and then as a half-wave rectifier. This combination optimises the performance of the brake – depending on the assignment of brake coil voltage and supply voltage:

- **Short-time overexcitation of the brake coil**
  Activating the brake coil for the overexcitation time $t_ü$ with twice the rated voltage allows the disengagement time to be reduced. The brake opens more quickly and wear on the friction lining is reduced.
  These features make this activation version particularly suitable for lifting applications. It is therefore only available in combination with a brake with increased braking torque.

- **Holding current reduction (cold brake)**
  By reducing the holding current, the bridge/half-wave rectifier is able to reduce the power input to the open brake. As the brake heats up less, this type of activation is known as "cold brake".

Brake data, reduced braking torque

► Please enquire for braking torques and maximum switching work values not listed here.

Size			06	08	10	12	14	16	18	20	25
Coil power	P_{in}	[kW]	0.020	0.025	0.030	0.040	0.050	0.055	0.085	0.10	0.11
Braking torque											
100	M_B	[Nm]	2.50	3.50	7.00	14.0	35.0	60.0	80.0	145	265
1000	M_B	[Nm]	2.30	3.10	6.10	12.0	30.0	50.0	65.0	115	203
1200	M_B	[Nm]	2.30	3.10	6.00	12.0	29.0	48.0	63.0	112	199
1500	M_B	[Nm]	2.20	3.00	5.80	11.0	28.0	47.0	61.0	109 [1]	193 [1]
1800	M_B	[Nm]	2.10	2.90	5.70	11.0	28.0	46.0	60.0 [1]		
3000	M_B	[Nm]	2.00	2.80	5.30	10.0	26.0 [1]	43.0 [1]			
3600	M_B	[Nm]	2.00	2.70	5.20	10.0 [1]					
Maximum switching energy											
100	Q_E	[KJ]	3.00	7.50	12.0	24.0	30.0	36.0	60.0	80.0	120
1000	Q_E	[KJ]	3.00	7.50	12.0	24.0	30.0	36.0	60.0	80.0	120
1200	Q_E	[KJ]	3.00	7.50	12.0	24.0	30.0	36.0	60.0	80.0	120
1500	Q_E	[KJ]	3.00	7.50	12.0	24.0	30.0	36.0	60.0	24.0 [1]	36.0 [1]
1800	Q_E	[KJ]	3.00	7.50	12.0	24.0	30.0	36.0	36.0 [1]		
3000	Q_E	[KJ]	3.00	7.50	12.0	24.0	18.0 [1]	11.0 [1]			
3600	Q_E	[KJ]	3.00	7.50	12.0	7.00 [1]					
Transition operating frequency	$S_{hü}$	[1/h]	79.0	50.0	40.0	30.0	28.0	27.0	20.0	19.0	15.0
Moment of inertia	J	[kgcm²]	0.015	0.061	0.20	0.45	0.63	1.50	2.90	7.30	20.0
Mass	m	[kg]	0.90	1.50	2.60	4.20	5.80	8.70	12.6	19.5	31.0

[1] In the region of the load limit the value for friction energy Q_{BW} can be reduced to 40 %.

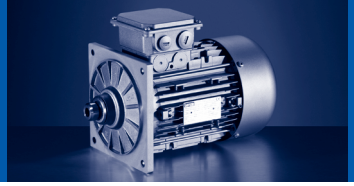

Activation via half-wave or bridge rectifier

Size			06	08	10	12	14	16	18	20	25
Friction energy	Q_{BW}	[MJ]	113	210	264	706	761	966	1542	2322	3522
Delay time Engaging	t_{11}	[ms]	11.0	14.0	20.0	21.0	37.0	53.0	32.0	47.0	264
Rise time Braking torque	t_{12}	[ms]	13.0	10.0	17.0	19.0	22.0	30.0	20.0	100	120
Engagement time 230	t_1	[ms]	24.0		37.0	40.0	59.0	83.0	52.0	147	384
Disengagement time	t_2	[ms]	35.0	37.0	57.0	65.0	148	169	230	207	269

Activation via bridge/half-wave rectifier

Design			Holding current reduction (cold brake)								
Size			06	08	10	12	14	16	18	20	25
Friction energy	Q_{BW}	[MJ]	113	210	264	706	761	966	1542	2322	3522
Overexcitation time	$t_{ü}$	[ms]	300				1300				
Min. rest time	t	[ms]	900				3900				
Delay time Engaging	t_{11}	[ms]	12.0	22.0	35.0	49.0	61.0	114	83.0	126	304
Rise time Braking torque	t_{12}	[ms]	14.0	16.0	30.0	45.0	37.0	65.0	52.0	269	138
Engagement time 230	t_1	[ms]	26.0	38.0	66.0	93.0	97.0	180	134	395	443
Disengagement time	t_2	[ms]	35.0	37.0	57.0	65.0	148	169	230	207	269

► The brake response and application times are guide values.
The engagement time is 10 times longer with AC-side switching.
With the maximum air gap the disengagement time t_2 – depending on the brake and control – is up to 4 times longer than the disengagement time with the rated air gap.

Brake data, standard braking torque

► Please enquire for braking torques and maximum switching work values not listed here.

Size			06	08	10	12	14	16	18	20	25
Coil power	P_{in}	[kW]	0.020	0.025	0.030	0.040	0.050	0.055	0.085	0.10	0.11
Braking torque											
100	M_B	[Nm]	4.00	8.00	16.0	32.0	60.0	80.0	150	260	400
1000	M_B	[Nm]	3.70	7.20	14.0	27.0	51.0	66.0	121	206	307
1200	M_B	[Nm]	3.60	7.00	14.0	27.0	50.0	65.0	118	201	300
1500	M_B	[Nm]	3.50	6.80	13.0	26.0	48.0	63.0	115	195 [1]	291 [1]
1800	M_B	[Nm]	3.40	6.70	13.0	26.0	47.0	61.0	112 [1]		
3000	M_B	[Nm]	3.20	6.30	12.0	24.0	44.0 [1]	57.0 [1]			
3600	M_B	[Nm]	3.20	6.10	12.0	23.0 [1]					
Maximum switching energy											
100	Q_E	[KJ]	3.00	7.50	12.0	24.0	30.0	36.0	60.0	80.0	120
1000	Q_E	[KJ]	3.00	7.50	12.0	24.0	30.0	36.0	60.0	80.0	120
1200	Q_E	[KJ]	3.00	7.50	12.0	24.0	30.0	36.0	60.0	80.0	120
1500	Q_E	[KJ]	3.00	7.50	12.0	24.0	30.0	36.0	60.0	24.0 [1]	36.0 [1]
1800	Q_E	[KJ]	3.00	7.50	12.0	24.0	30.0	36.0	36.0 [1]		
3000	Q_E	[KJ]	3.00	7.50	12.0	24.0	18.0 [1]	11.0 [1]			
3600	Q_E	[KJ]	3.00	7.50	12.0	7.00 [1]					
Transition operating frequency	$S_{hü}$	[1/h]	79.0	50.0	40.0	30.0	28.0	27.0	20.0	19.0	15.0
Moment of inertia	J	[kgcm²]	0.015	0.061	0.20	0.45	0.63	1.50	2.90	7.30	20.0
Mass	m	[kg]	0.90	1.50	2.60	4.20	5.80	8.70	12.6	19.5	31.0

[1] In the region of the load limit the value for friction energy Q_{BW} can be reduced to 40 %.

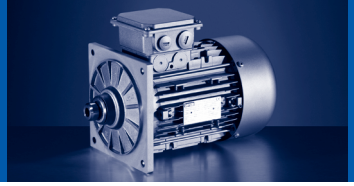

Activation via half-wave or bridge rectifier

Size			06	08	10	12	14	16	18	20	25
Friction energy	Q_{BW}	[MJ]	85.0	158	264	530	571	966	1542	2322	3522
Delay time Engaging	t_{11}	[ms]	15.0		28.0		17.0	27.0	33.0	65.0	110
Rise time Braking torque	t_{12}	[ms]	13.0	16.0	19.0	25.0		30.0	45.0	100	120
Engagement time 230	t_1	[ms]	28.0	31.0	47.0	53.0	42.0	57.0	78.0	165	230
Disengagement time	t_2	[ms]	45.0	57.0	76.0	115	210	220	270	340	390

Activation via bridge/half-wave rectifier

Design			Holding current reduction (cold brake)								
Size			06	08	10	12	14	16	18	20	25
Friction energy	Q_{BW}	[MJ]	85.0	158	264	530	571	966	1542	2322	3522
Overexcitation time	$t_{ü}$	[ms]	300				1300				
Min. rest time	t	[ms]	900				3900				
Delay time Engaging	t_{11}	[ms]	16.0	25.0	31.0	48.0	33.0	58.0	80.0	102	154
Rise time Braking torque	t_{12}	[ms]	14.0	27.0	21.0	43.0	49.0	64.0	109	157	168
Engagement time 230	t_1	[ms]	30.0	52.0		90.0	82.0	122	189	259	322
Disengagement time	t_2	[ms]	45.0	57.0	76.0	115	210	220	270	340	390

► The brake response and application times are guide values.
The engagement time is 10 times longer with AC-side switching.
With the maximum air gap the disengagement time t_2 – depending on the brake and control – is up to 4 times longer than the disengagement time with the rated air gap.

Brake data, increased braking torque

► Please enquire for braking torques and maximum switching work values not listed here.

Size			10	12	14	16	16	18	20	20	25	25
Coil power	P_{in}	[kW]	0.030	0.040	0.050	0.055	0.055	0.085	0.10	0.10	0.11	0.11
Braking torque												
100	M_B	[Nm]	23.0	46.0	75.0	100	125	200	315	400	490	600
1000	M_B	[Nm]	20.0	39.0	64.0	83.0	103	162	249	317	376	461
1200	M_B	[Nm]	20.0	39.0	62.0	81.0	101	158	244	309	367	449
1500	M_B	[Nm]	19.0	38.0	60.0	78.0	98.0	153	237 [1]	300 [1]	356 [1]	436 [1]
1800	M_B	[Nm]	19.0	37.0	59.0	77.0	96.0	150 [1]				
3000	M_B	[Nm]	17.0	34.0	55.0 [1]	71.0 [1]	89.0 [1]					
3600	M_B	[Nm]	17.0	33.0 [1]								
Maximum switching energy												
100	Q_E	[KJ]	12.0	24.0	30.0	36.0	36.0	60.0	80.0	80.0	120	120
1000	Q_E	[KJ]	12.0	24.0	30.0	36.0	36.0	60.0	80.0	80.0	120	120
1200	Q_E	[KJ]	12.0	24.0	30.0	36.0	36.0	60.0	80.0	80.0	120	120
1500	Q_E	[KJ]	12.0	24.0	30.0	36.0	36.0	60.0	24.0 [1]	24.0 [1]	36.0 [1]	36.0 [1]
1800	Q_E	[KJ]	12.0	24.0	30.0	36.0	36.0	36.0 [1]				
3000	Q_E	[KJ]	12.0	24.0	18.0 [1]	11.0 [1]	11.0 [1]					
3600	Q_E	[KJ]	12.0	7.00 [1]								
Transition operating frequency	$S_{hü}$	[1/h]	40.0	30.0	28.0	27.0	27.0	20.0	19.0	19.0	15.0	15.0
Moment of inertia	J	[kgcm²]	0.20	0.45	0.63	1.50	1.50	2.90	7.30	7.30	20.0	20.0
Mass	m	[kg]	2.60	4.20	5.80	8.70	8.70	12.6	19.5	19.5	31.0	31.0

[1] In the region of the load limit the value for friction energy Q_{BW} can be reduced to 40 %.

8

Activation via half-wave or bridge rectifier

Size			10	12	14	16		18	20		25	
Friction energy	Q_{BW}	[MJ]	198	353	253	563	241	578	1596	580	2465	1409
Delay time Engaging	t_{11}	[ms]	10.0	16.0	11.0	22.0	17.0	24.0	46.0	17.0	77.0	38.0
Rise time Braking torque	t_{12}	[ms]	19.0	25.0		30.0		45.0	100		120	
Engagement time 230	t_1	[ms]	29.0	41.0	36.0	52.0	47.0	69.0	146	117	197	158
Disengagement time	t_2	[ms]	109	193	308	297	435	356	378	470	451	532

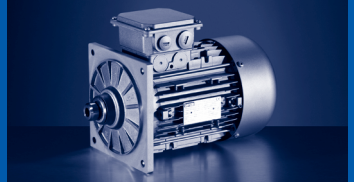

Activation via bridge/half-wave rectifier

Design			Holding current reduction (cold brake)									
Size			**10**	**12**	**14**	**16**		**18**	**20**		**25**	
Friction energy	Q_{BW}	[MJ]	198	353	253	563	241	578	1596	580	2465	1409
Overexcitation time	$t_ü$	[ms]	300		1300							
Min. rest time	t	[ms]	900		3900							
Delay time Engaging	t_{11}	[ms]	24.0	27.0	17.0	41.0	21.0	60.0	69.0	17.0	123	85.0
Rise time Braking torque	t_{12}	[ms]	44.0	43.0	37.0	55.0	37.0	113	148	100	190	270
Engagement time 230	t_1	[ms]	68.0	70.0	54.0	97.0	57.0	173	217	334	313	355
Disengagement time	t_2	[ms]	109	193	308	297	435	356	378	470	451	532

Design			Over-excitation						
Size			**10**	**12**	**14**	**16**	**18**	**20**	**25**
Friction energy	Q_{BW}	[MJ]	264	706	761	966	1542	2322	3522
Overexcitation time	$t_ü$	[ms]	300		1300				
Min. rest time	t	[ms]	900		3900				
Delay time Engaging	t_{11}	[ms]	29.0	54.0	31.0	70.0	46.0	86.0	103	55.0	171	135
Rise time Braking torque	t_{12}	[ms]	53.0	87.0	68.0	93.0	83.0	160	222	319	266	430
Engagement time 230	t_1	[ms]	82.0	141	99.0	163	129	246	325	374	437	565
Disengagement time	t_2	[ms]	53.0	81.0	117	141	168	151	160	167	184	204

► The brake response and application times are guide values.
The engagement time is 10 times longer with AC-side switching.
With the maximum air gap the disengagement time t_2 – depending on the brake and control – is up to 4 times longer than the disengagement time with the rated air gap.

Permissible friction energy

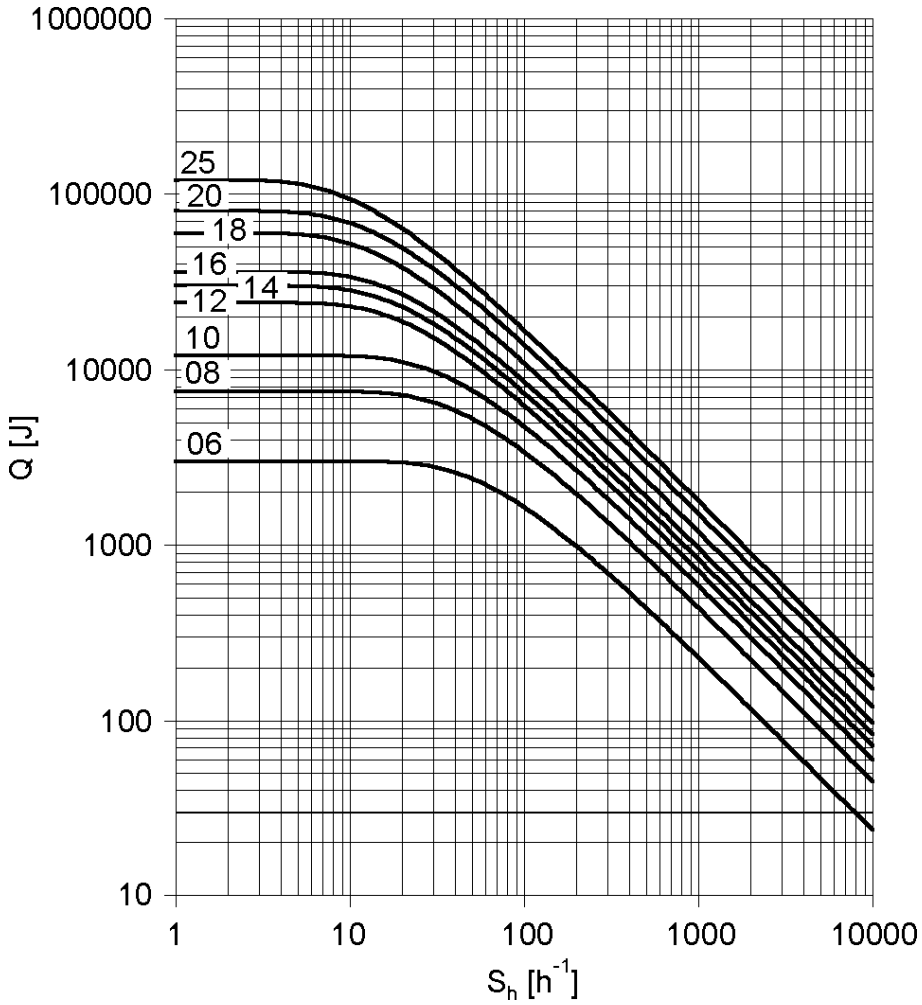

Q =Switching energy per switching cycle
S_h =Operating frequency
Brake size = 06 ... 25

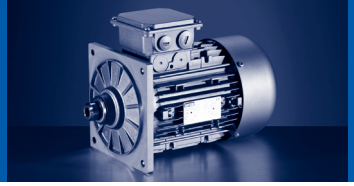

Rated data

The use of a blower enables operation below 20 Hz without torque derating.

Blower data 50 Hz

	Number of phases	Connection method					
			U_{min}	U_{max}	P_{max}	I_{max}	m
			[V]	[V]	[kW]	[A]	[kg]
MDFMA□□063	1		230	277	0.027	0.11	2.00
	3	Δ	200	303	0.028	0.12	
		Y	346	525		0.070	
MDFMA□□071	1		230	277	0.027	0.10	2.10
	3	Δ	200	303	0.031	0.11	
		Y	346	525		0.060	
M□FMA□□080	1		230	277	0.029	0.11	2.30
	3	Δ	200	303	0.031		
		Y	346	525		0.060	
M□FMA□□090	1		220	277	0.065	0.29	2.70
	3	Δ	200	303	0.091	0.38	
		Y	346	525		0.22	
M□FMA□□100	1		220	277	0.066	0.28	3.00
	3	Δ	200	303	0.091	0.37	
		Y	346	525		0.22	
M□FMA□□112	1		220	277	0.071	0.28	3.10
	3	Δ	200	303	0.097	0.35	
		Y	346	525		0.20	
M□FMA□□132	1		230	277	0.098	0.40	4.20
	3	Δ	200	303	0.12	0.58	
		Y	346	525		0.33	
M□FMA□□160	1		230	277	0.25	0.97	6.20
	3	Δ	200	303		0.87	
		Y	346	525		0.50	
M□FMA□□180	1		230	277		0.97	8.00
	3	Δ	200	303		0.87	
		Y	346	525		0.50	
M□FMA□□225		Δ	200	400	0.28	1.10	15.0
		Y	346	525	0.17	0.35	

Blower data 60 Hz

	Number of phases	Connection method					
			U_{min}	U_{max}	P_{max}	I_{max}	m
			[V]	[V]	[kW]	[A]	[kg]
MDFMA□□063	1		230	277	0.032	0.12	2.00
	3	Δ	220	332	0.028	0.10	
		Y	380	575		0.060	
MDFMA□□071	1		230	277	0.033	0.12	2.10
	3	Δ	220	332	0.029	0.10	
		Y	380	575		0.060	
M□FMA□□080	1		230	277	0.037	0.14	2.30
	3	Δ	220	332	0.034	0.10	
		Y	380	575		0.060	
M□FMA□□090	1		220	277	0.065	0.25	2.70
	3	Δ		332	0.077	0.33	
		Y	380	575		0.19	
M□FMA□□100	1		220	277	0.075	0.30	3.00
	3	Δ		332	0.087	0.31	
		Y	380	575		0.18	
M□FMA□□112	1		220	277	0.094	0.37	3.10
	3	Δ		332	0.10	0.31	
		Y	380	575		0.18	
M□FMA□□132	1		230	277	0.15	0.57	4.20
	3	Δ	220	332		0.44	
		Y	380	575		0.25	
M□FMA□□160		Δ	220	332	0.36	0.93	6.20
		Y	380	575		0.56	
M□FMA□□180		Δ	220	332		0.93	8.00
		Y	380	575		0.56	
M□FMA□□225		Δ	220	400	0.28	0.76	15.0
		Y	380	575	0.26	0.43	

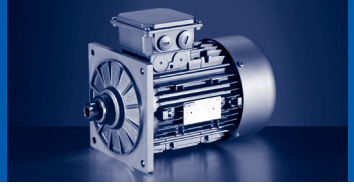

Tailored to meet the requirements of the various applications and necessary accuracies, the following feedback systems are available.

- The three-phase AC motors with resolver, incremental encoder or SinCos absolute value encoders cannot be used for speed-dependent safety functions in conjunction with the SM 301 safety module.

Resolver

Stator-fed resolver with two stator windings offset by 90° and one rotor winding with transformer winding.

Product key				**RS1**
Accuracy			[']	-10 ... 10
Absolute positioning				1 revolution
Max. input voltage DC	$U_{in,max}$		[V]	10.0
Max. input frequency	$f_{in,max}$		[Hz]	4.00
Ratio Stator / rotor		± 5 %		0.30
Rotor impedance	Z_{ro}		[Ω]	51 + j90
Stator impedance	Z_{so}		[Ω]	102 + j150
Impedance	Z_{rs}		[Ω]	44 + j76
Min. insulation resistance At DC 500 V	**R**		[Ω]	10.0
Number of pole pairs				1

Incremental encoder and SinCos absolute value encoder

Encoder type			HTL incremental				TTL incremental			SinCos absolute value
Product key			**IG128-24V-H**	**IG512-24V-H**	**IG1024-24V-H**	**IG2048-24V-H**	**IG512-5V-T**	**IG1024-5V-T**	**IG2048-5V-T**	**AM1024-8V-H**
Encoder type										**Multi-turn**
Pulses			128	512	1024	2048	512	1024	2048	1024
Output signals			HTL				TTL			1 Vss
Interfaces			A, B track							Hiper-face
Absolute revolutions			0							4096
Accuracy		[′]	-22.5 ... 22.5	-2 ... 2						-0.8 ... 0.8
Min. input voltage DC	$U_{in,min}$	[V]	8.00				4.75			7.00
Max. input voltage DC	$U_{in,max}$	[V]	26.0	30.0			5.25			12.0
Max. current consumption	I_{max}	[A]	0.040	0.15						0.080
Limit frequency	f_{max}	[kHz]	30.0	160			300			200
Inverter assignment			E84AVSC E84AVHC	E84AVHC			E84AVTC E94A ECS EVS93			

8

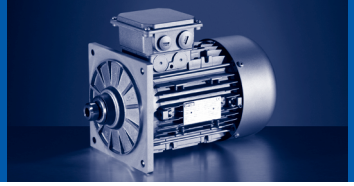

The thermal sensors are integrated in the windings. The use of an additional motor protection switch is recommended.

TKO thermal contacts

Function	Operating temperature	Min. reset temperature	Max. reset temperature	Max. input current	Max. input voltage
					AC
	T	T_{min}	T_{max}	$I_{in,max}$	$U_{in,max}$
	-5 ... 5				
	[°C]	[°C]	[°C]	[A]	[V]
NC contact	150	90.0	135	2.50	250

PTC thermistor

Function	Operating temperature	Rated resistance			Standard
		155 °C	-20 °C	140 °C	240
	T	R_N	R_N	R_N	
	-5 ... 5				
	[°C]	[Ω]	[Ω]	[Ω]	
Sudden change in resistance	150	550	30.0	250	DIN 44080 DIN VDE 0660 Part 303

KTY continuous temperature sensor

	Function	Rated resistance			Max. input current	
		25 °C	150 °C	170 °C	25 °C	170 °C
		R_N	R_N	R_N	$I_{in,max}$	$I_{in,max}$
		[Ω]	[Ω]	[Ω]	[A]	[A]
KTY83-110	Continuous resistance change	1000	2225	2471	0.010	0.002
KTY84-130	Continuous resistance change	603	1334	1482	0.010	0.002

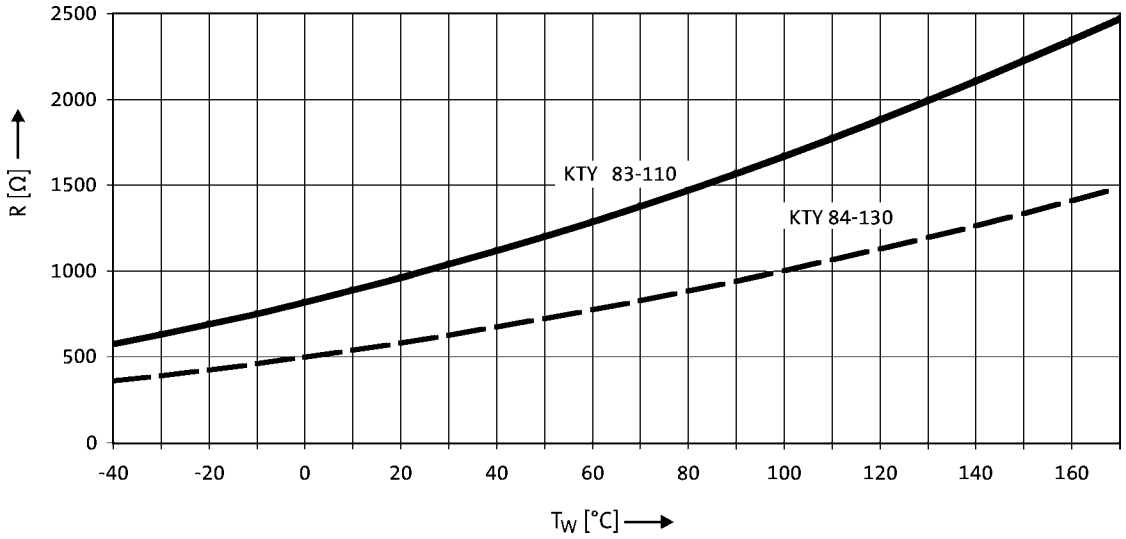

► If the detector is supplied with a measured current of 1 mA, the above relationship between the temperature and the resistance applies.

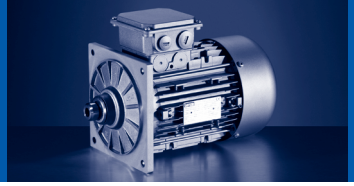

Design	Handwheel made from alloy, smooth wheel surface
Function	Manual operation: ► Emergency operation ► Setting-up operation for machines/systems
Note	The increased moment of inertia must be taken into account during project planning! For frequent switching operations, in particular if the direction of rotation changes: Please contact Lenze.

	Moment of inertia	Mass
	Additional	**Additional**
	J	**m**
	[kgcm²]	[kg]
071	16.0	0.60
080	16.0	0.60
090	16.0	0.60
100	16.0	0.60
112	16.0	0.60
132	139	1.80

Design	Integral fan made from cast iron
Function	Increased motor centrifugal mass for smooth starting/braking
Note	The increased moment of inertia must be taken into account during project planning! For frequent switching operations, in particular if the direction of rotation changes: Please contact Lenze.

	Moment of inertia	Mass
	Additional	**Additional**
	J	**m**
	[kgcm²]	[kg]
071	18.0	1.20
080	29.0	1.40
090-□1	83.0	2.80
090-□2	55.0	2.00
100	77.0	2.50
112	153	3.80
132	356	6.00

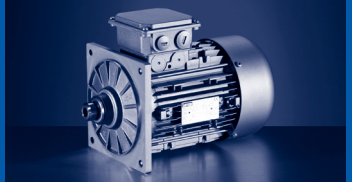

Motors with integral fan

4-pole and 6-pole motors

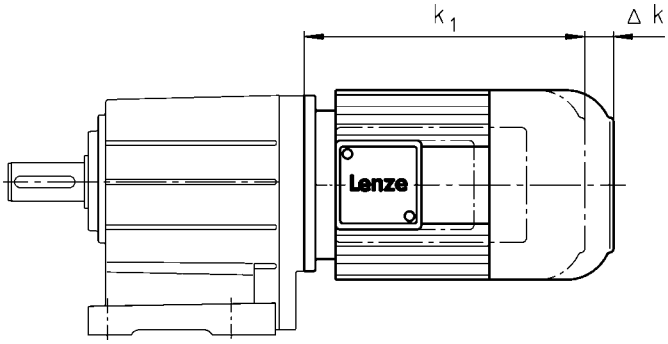

	M□□MA XX	M□□MA BR	M□□MA BS M□□MA BI M□□MA BA	M□□MA BL	M□□MA RS M□□MA IG M□□MA AG	M□□MA LL
	Δ k	Δ k	Δ k	Δ k	Δ k	Δ k
	[mm]	[mm]	[mm]	[mm]	[mm]	[mm]
063-02 063-22	0	71	135		71	
063-12 063-32 063-42		40	103		56	
071-32 071-42 071-13 071-33		52	96	52	52	0
080-32 080-42 080-13 080-33		73	111	73	111	4
090-12 090-32		68	105	68	87	0
100-12 100-32		76	101	76	81	76
112-22 112-32		90	120	90	80	0
132-12 132-22 132-32		110	125	110	103	
160-22 160-32		105	191		83	
180-12 180-32		113	192		79	
180-42						
225-12 225-22			193		80	

8

2-pole motors

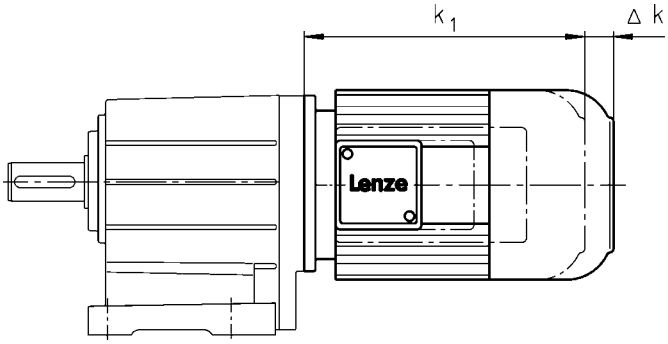

	M□□MA XX	M□□MA BR	M□□MA BL	M□□MA LL
	Δ k	Δ k	Δ k	Δ k
	[mm]	[mm]	[mm]	[mm]
063-11 063-31	0	40		
071-11 071-31		52	52	0
080-11 080-31		73	73	4
090-11 090-31		68	68	0
100-31 100-41		76	76	76
112-31 112-41		90	90	0
132-21		110	110	

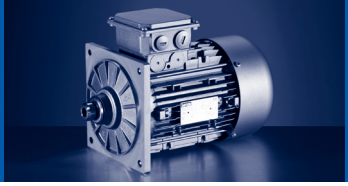

Motors with integral fan and protection cover

4-pole and 6-pole motors

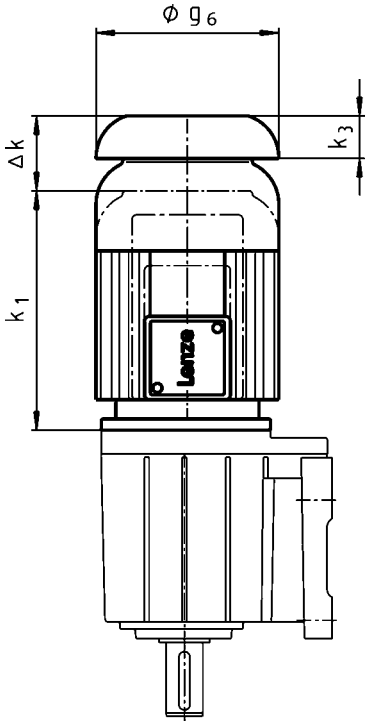

	M□□MA XX	M□□MA BR	M□□MA BS M□□MA BI M□□MA BA	M□□MA BL	M□□MA RS M□□MA IG M□□MA AG	M□□MA LL		
	Δ k	Δ k	Δ k	Δ k	Δ k	Δ k	g_6	k_3
	[mm]	[mm]	[mm]	[mm]	[mm]	[mm]	[mm]	[mm]
063-02 063-22		97	160		97		123	11
063-12 063-32 063-42	26	66	129		82			
071-32 071-42 071-13 071-33		78	122	78	78	26	138	12
080-32 080-42 080-13 080-33		99	137	99	127	30	156	16
090-12 090-32		94	131	94	113	26	176	15
100-12 100-32	31	107	132	107	112	107	194	17
112-22 112-32		121	151	121	111	31	218	18
132-12 132-22 132-32		141	156	141	134		257	20
160-22 160-32	37	142	228		120		310	25

2-pole motors

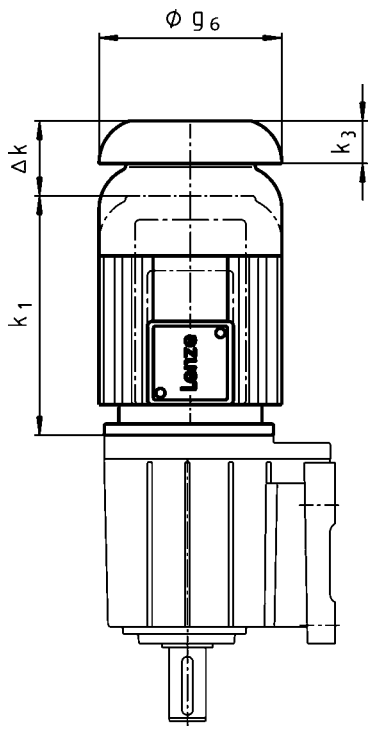

	M□□MA XX	M□□MA BR	M□□MA BL	M□□MA LL		
	Δ k	Δ k	Δ k	Δ k	g_6	k_3
	[mm]	[mm]	[mm]	[mm]	[mm]	[mm]
063-11 063-31	26	66			123	11
071-11 071-31		78	78	26	138	12
080-11 080-31		99	99	30	156	16
090-11 090-31		94	94	26	176	15
100-31 100-41	31	107	107	107	194	17
112-31 112-41		121	121	31	218	18
132-21		141	141		257	20

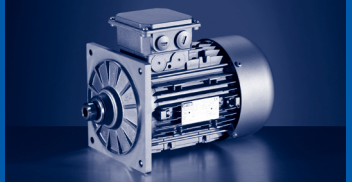

Motors with integral fan and 2nd shaft end

4-pole and 6-pole motors

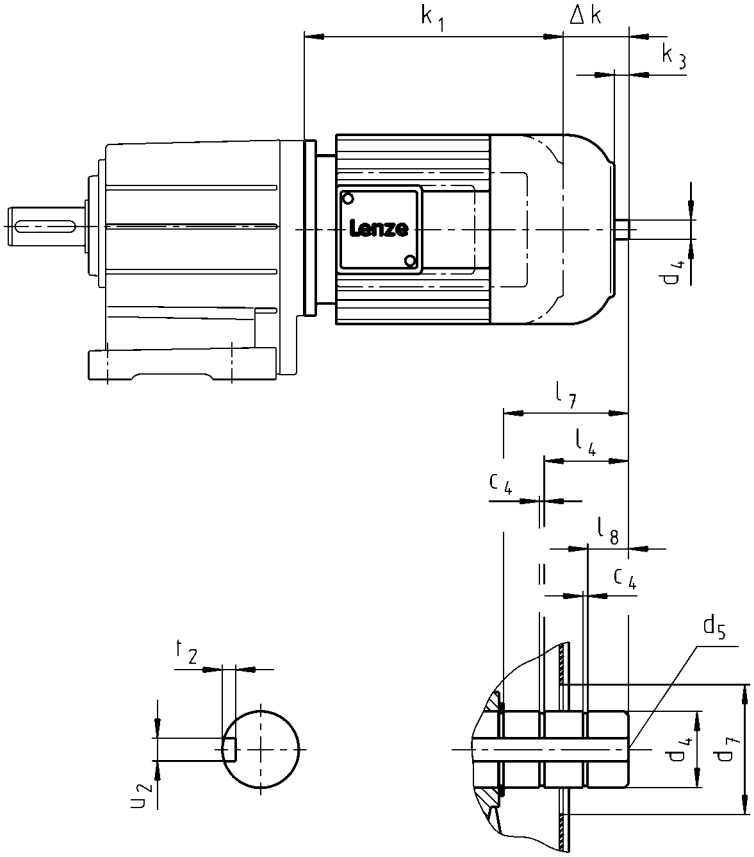

	M□□MA ZE M□□MA BZ M□□MA LZ											
	Δ k	k_3	c_4	d_4	d_4	d_5	d_7 [1]	l_4	l_7	l_8	u_2	t_2
				h6	j6							
	[mm]	[mm]	[mm]	[mm]	[mm]	[mm]	[mm]	[mm]	[mm]	[mm]	[mm]	[mm]
071-32 071-42 071-13 071-33	47	11	1.1	14		M5	34		19.0	3.0	5.0	3.0
080-32 080-42 080-13 080-33	68	9								4.5		
090-12 090-32	57									5.0		
100-12 100-32	71	19	1.3		20	M6		17	32.5	10.5	6.0	3.5
112-22 112-32	84	16							28.5	7.0		
132-12 132-22 132-32	101	25	1.6		30	M10	46	25	42.0	8.5	8.0	4.0

[1] During operation, appropriate measures must be taken to make fan cover opening safe.

2-pole motors

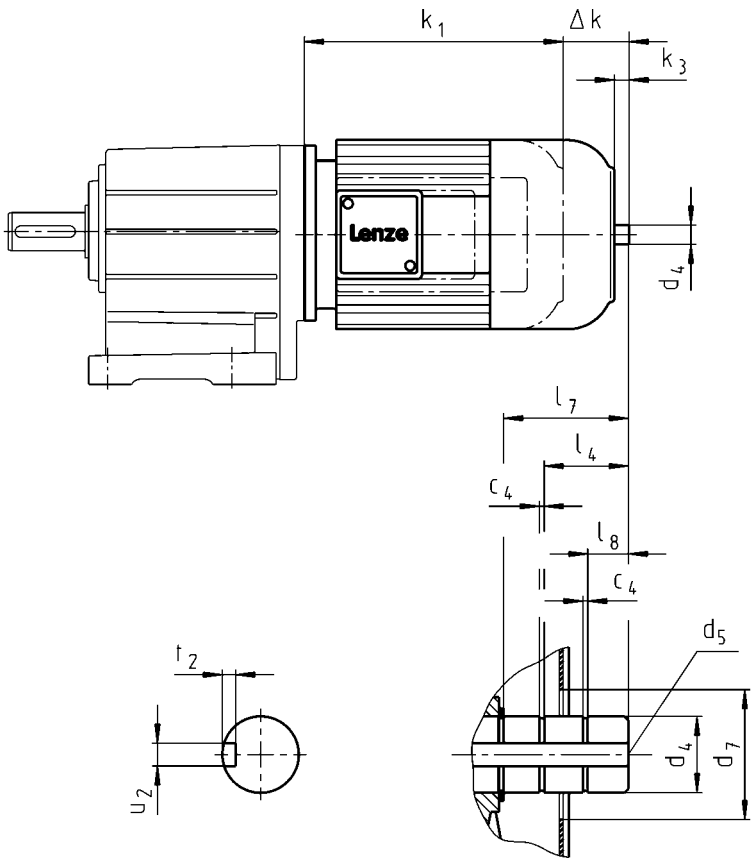

	M□□MA ZE M□□MA BZ M□□MA LZ											
	Δ k	k_3	c_4	d_4	d_4	d_5	d_7 [1]	l_4	l_7	l_8	u_2	t_2
				h6	j6							
	[mm]	[mm]	[mm]	[mm]	[mm]	[mm]	[mm]	[mm]	[mm]	[mm]	[mm]	[mm]
071-11 **071-31**	47	11	1.1	14		M5			19.0	3.0	5.0	3.0
080-11 **080-31**	68	9	1.3	19		M6				4.5	6.0	3.2
090-11 **090-31**	57				20		34		19.5	5.5		3.5
100-31 **100-41**	71	19			25	M10		17	32.5	10.5	8.0	4.0
112-31 **112-41**	84	16							28.5	7.0		
132-21	101	25	1.6		30		48	25	42.0	8.5		

[1] During operation, appropriate measures must be taken to make fan cover opening safe.

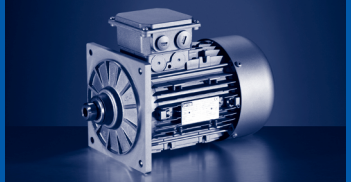

Motors with integral fan and handwheel

4-pole and 6-pole motors

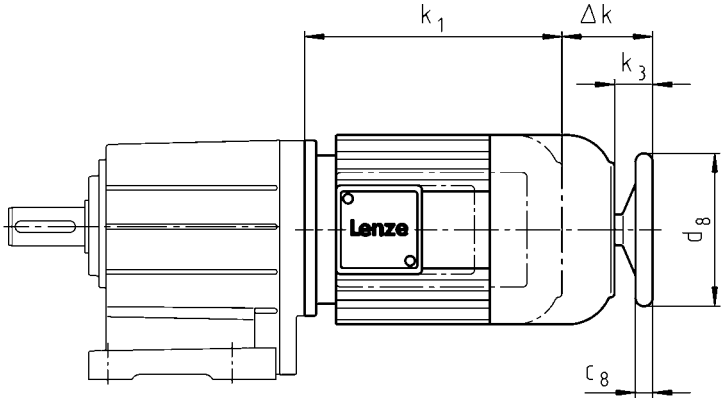

	M□□MA HA M□□MA BH M□□MA LH			
	Δ k	**k_3**	**c_8**	**d_8**
	[mm]	[mm]	[mm]	[mm]
071-32 071-42 071-13 071-33	70	34	18	160
080-32 080-42 080-13 080-33	91			
090-12 090-32	80	32		
100-12 100-32	94	42		
112-22 112-32	107	39		
132-12 132-22 132-32	126	50	26	250

Motors with blower

4-pole and 6-pole motors

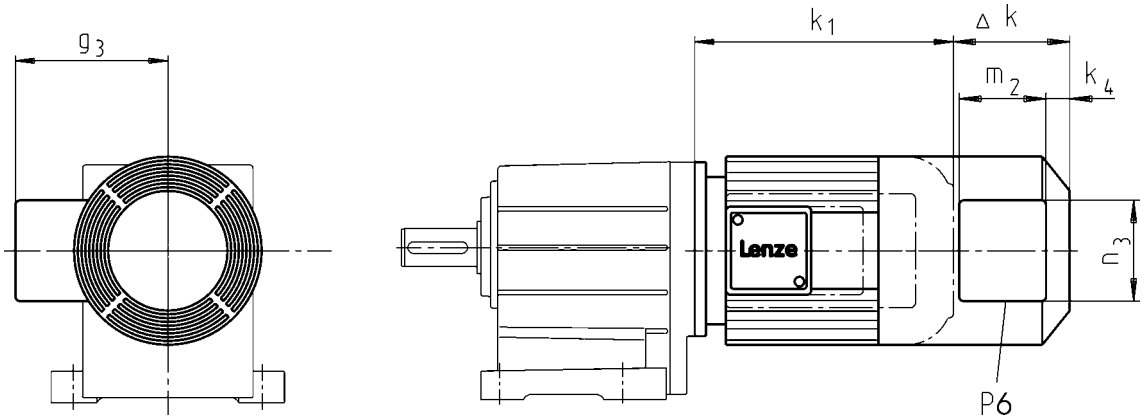

	M□□MA XX	M□□MA BR	M□□MA BS M□□MA BI M□□MA BA	M□□MA RS M□□MA IG M□□MA AG					
	Δ k	Δ k	Δ k	Δ k	k_4	g_3	m_2	n_3	P_6
	[mm]	[mm]	[mm]	[mm]	[mm]	[mm]	[mm]	[mm]	[mm]
063-12 063-32 063-42	128	170	170	128	12	115	95	105	1x M16x1.5
071-32 071-42 071-13 071-33		165	165			122			
080-32 080-42 080-13 080-33		183	183		13	132	96	106	
090-12 090-32		181	181		22	141	95	105	
100-12 100-32	109	170	170	109		150			
112-22 112-32	102	183	183	183		162			
132-12 132-22 132-32	115	202	202	202	32	182			
160-22 160-32	149	179	237	224	31	209	96	106	
180-12 180-32		215	275	215					
180-42	155		260						
225-12 225-22	213	213	213	213					

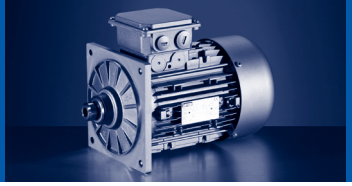

2-pole motors

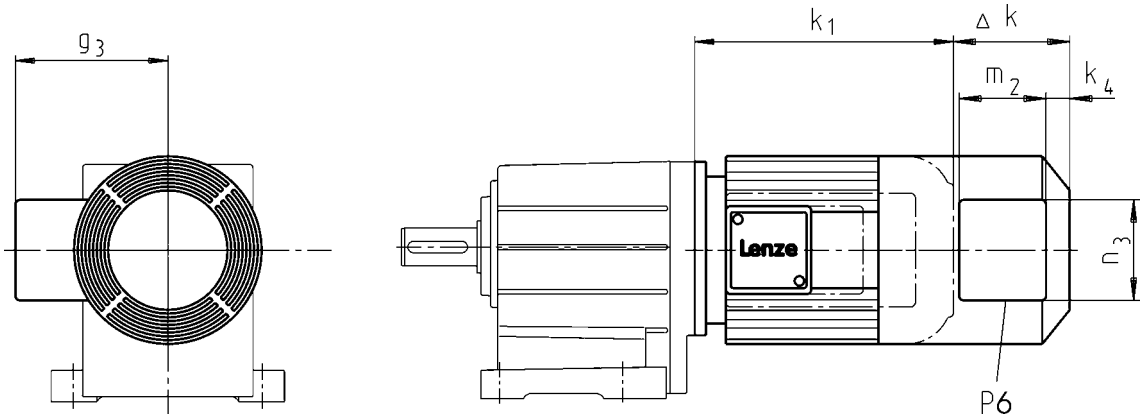

	M□□MA XX	M□□MA BR					
	Δ k	Δ k	k_4	g_3	m_2	n_3	P_6
	[mm]	[mm]	[mm]	[mm]	[mm]	[mm]	[mm]
063-11 **063-31**	128	170	12	115	95	105	1x M16x1.5
071-11 **071-31**		165		122			
080-11 **080-31**		183	13	132	96	106	
090-11 **090-31**		181	22	141	95	105	
100-31 **100-41**	109	170		150			
112-31 **112-41**	102	183		162			
132-21	115	202	32	182			

Motors with blower and protection cover

4-pole and 6-pole motors

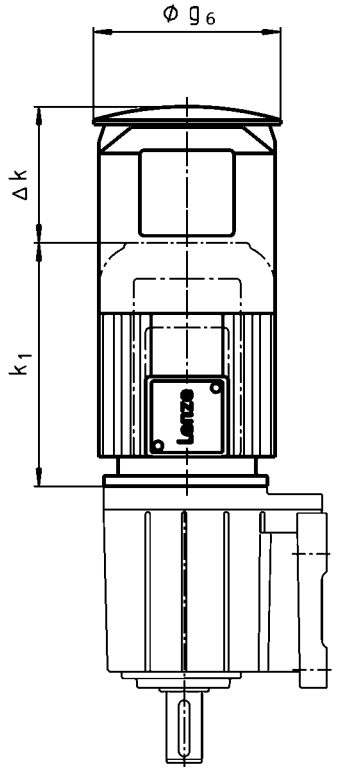

	M□□MA XX	M□□MA BR M□□MA BS M□□MA BI	M□□MA RS M□□MA IG M□□MA AG	
	Δ k	Δ k	Δ k	g_6
	[mm]	[mm]	[mm]	[mm]
063-12 063-32 063-42	169	209	169	133
071-32 071-42 071-13 071-33	165	202	165	150
080-32 080-42 080-13 080-33	168	224	168	170
090-12 090-32	157	210	157	188
100-12 100-32	137	198	137	210
112-22 112-32	135	216	216	249
132-12 132-22 132-32	140	226	226	300
160-22 160-32	155	267	267	338

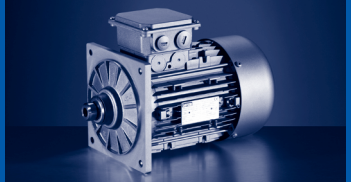

2-pole motors

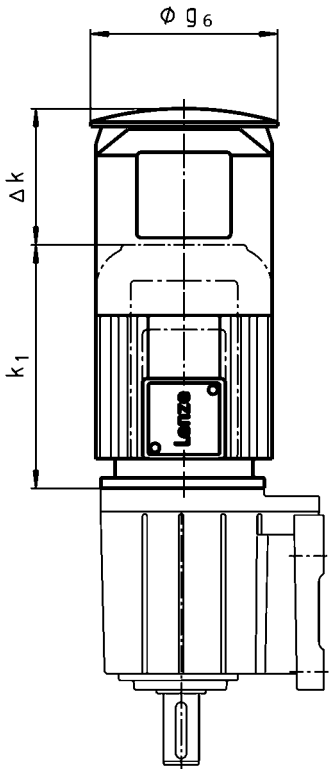

	M□□MA XX	M□□MA BR	
	Δ k	Δ k	g_6
	[mm]	[mm]	[mm]
063-11 063-31	169	209	133
071-11 071-31	165	202	150
080-11 080-31	168	224	170
090-11 090-31	157	210	188
100-31 100-41	137	198	210
112-31 112-41	135	216	249
132-21	140	226	300

Motors with manual brake release lever

MD□MA (IE1)

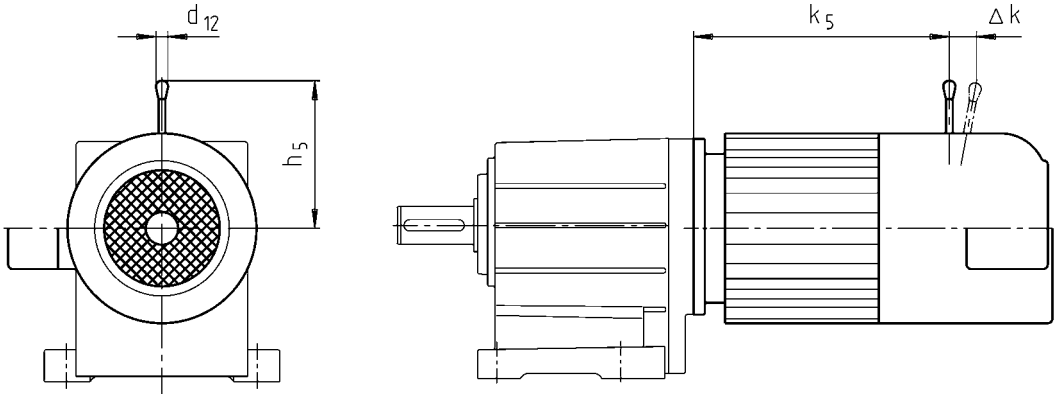

			Brake				
				k_5	Δ k	h_5	d_{12}
				[mm]	[mm]	[mm]	[mm]
	063-02 063-22		06	185	29	107	13.0
063-11 063-31	063-12 063-32 063-42		06	173	29	107	13.0
071-11 071-31	071-32 071-42	071-13 071-33	06 08	186 187	29 27	107 116	13.0 13.0
080-11 080-31	080-32 080-42	080-13 080-33	06 08	207 218	29 27	107 116	13.0 13.0
090-11 090-31	090-32		08 10	245 256	27 28	116 132	13.0 13.0
100-31 100-41	100-12 100-32		10 12	279 281	28 37	132 161	13.0 13.0
112-31	112-22		12 14	292 296	37 41	161 195	13.0 24.0
112-41	112-32		12 14	336 340	37 41	161 195	13.0 24.0
132-21	132-22 132-32		14 16	373 373	41 55	195 240	24.0 24.0
	160-22		16 18	420 423	55 59	240 279	24.0 24.0
	160-32		16 18	464 467	55 59	240 279	24.0 24.0
	180-12 180-32		18 20	539 546	59 74	279 319	24.0 24.0
	180-42		18 20	596 603	59 74	279 319	24.0 24.0
	225-12 225-22		25 25	785 785	103 103	445 445	24.0 24.0

The following combinations with the manual release lever and motor connection in the same position are not possible:

- HAN connector with connection in position 1
- motec inverter
- Terminal boxes for motor sizes 071, 080, 090 for brake and feedback (M□□MA BR/BS/BA/BI)

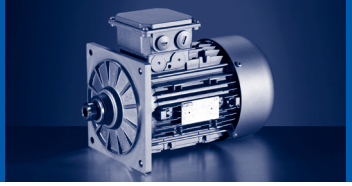

MH□MA (IE2)

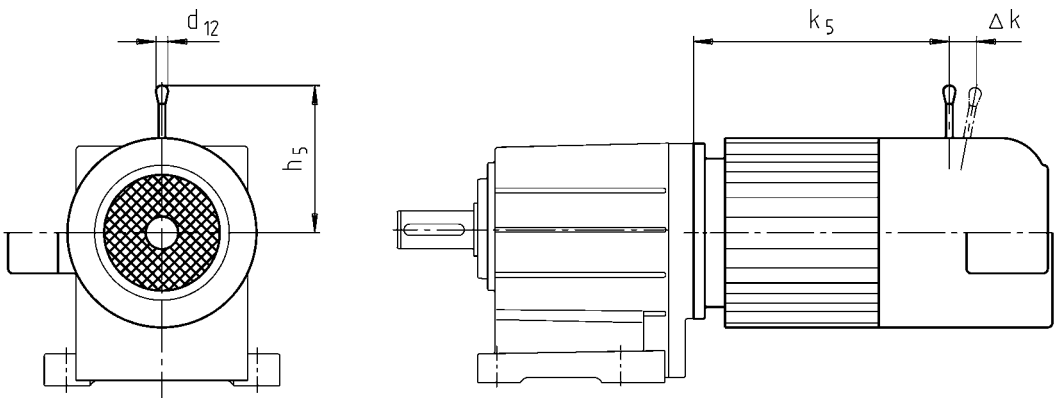

	Brake				
		k_5	Δ k	h_5	d_{12}
		[mm]	[mm]	[mm]	[mm]
080-32	06 08	207 218	29 27	107 116	13.0 13.0
090-12 090-32	08 10	245 256	27 28	116 132	13.0 13.0
100-12	10 12	279 281	28 37	132 161	13.0 13.0
100-32	10 12	294 296	28 37	132 161	13.0 13.0
112-22	12 14	292 296	37 41	161 195	13.0 24.0
132-12 132-22	14 16	373 373	41 55	195 240	24.0 24.0
160-22	16 18	420 423	55 59	240 279	24.0 24.0
160-32	16 18	464 467	55 59	240 279	24.0 24.0
180-12 180-32	18 20	539 546	59 74	279 319	24.0 24.0
180-42	18 20	596 603	59 74	279 319	24.0 24.0
225-12 225-22	25 25	785 785	103 103	445 445	24.0 24.0

The following combinations with the manual release lever and motor connection in the same position are not possible:

- HAN connector with connection in position 1
- motec inverter
- Terminal boxes for motor sizes 080, 090 for brake and feedback (M□□MA BR/BS/BA/BI)

Motor terminal box KK1

- For motors with motor terminal box KK1, the connector position can be selected in accordance with the terminal box position.
- If preferred positions are not specified in the order, the cable entry will be positioned as circled on the diagram below.

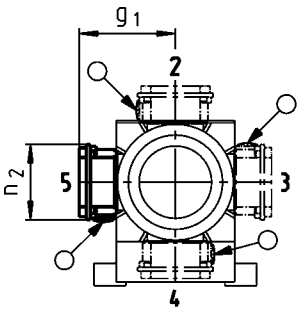

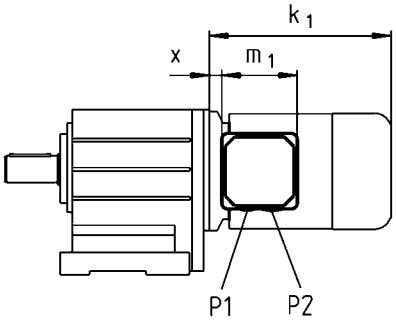

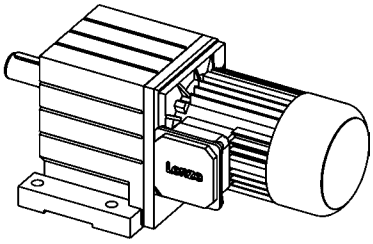

	x	g_1	m_1	n_2	P_1	P_2
	[mm]	[mm]	[mm]	[mm]	[mm]	[mm]
063	21 8 [1)]	100 114 [1)]	75 101 [1)]	75 101 [1)]	M16x1.5 M20x1.5 [1)]	M20x1.5 M20x1.5
071	24 11 [1)]	109 123 [1)]				
080	14	141	115	115	M20x1.5	M25x1.5
090	19	146				
100	20	157				
112	22	167				
132	33	195	122	122	M32x1.5	M32x1.5

[1)] UL/CSA approval: cURus

Position of cable entry

Motor terminal box in position 2	Motor terminal box in position 3
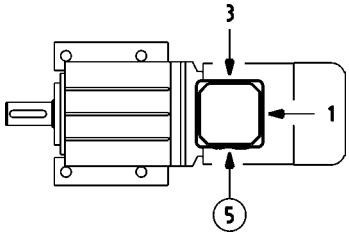	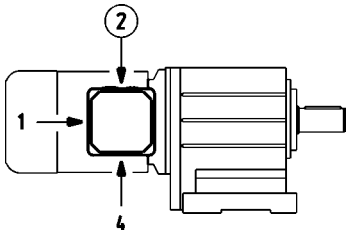

Motor terminal box in position 4	Motor terminal box in position 5
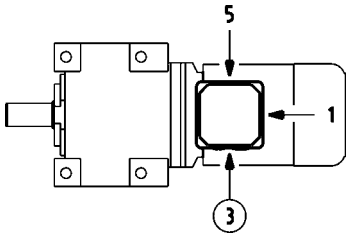	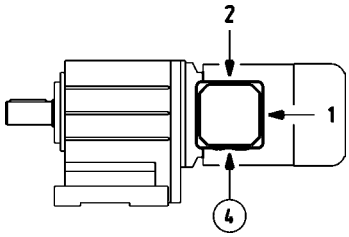

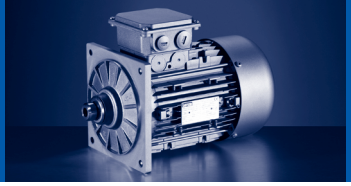

Motor terminal box KK2

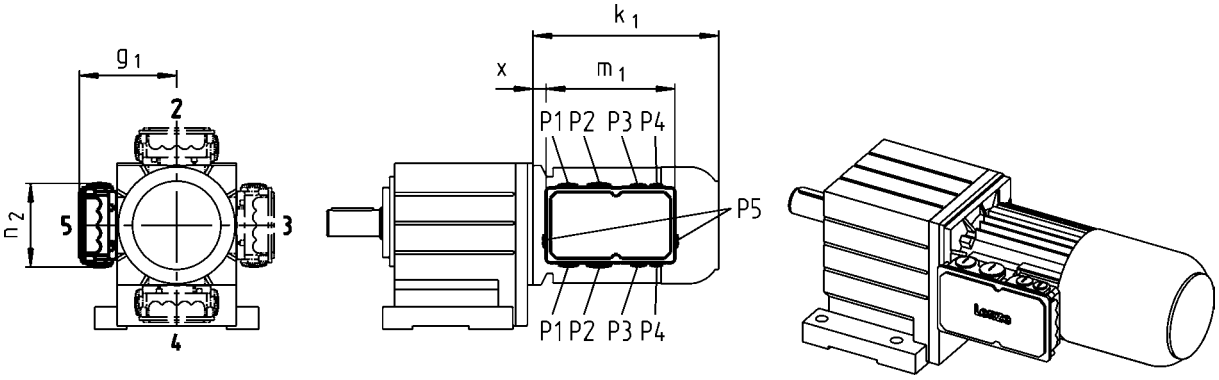

	x	g_1	m_1	n_2	P_1	P_2
	[mm]	[mm]	[mm]	[mm]	[mm]	[mm]
063	13	107	136	103	M16x1.5	M20x1.5
071	15	118				
080	17	132	152	121	M20x1.5	M25x1.5
090	22	137				
100	23	147				
112	25	158				

Motor terminal box KK3

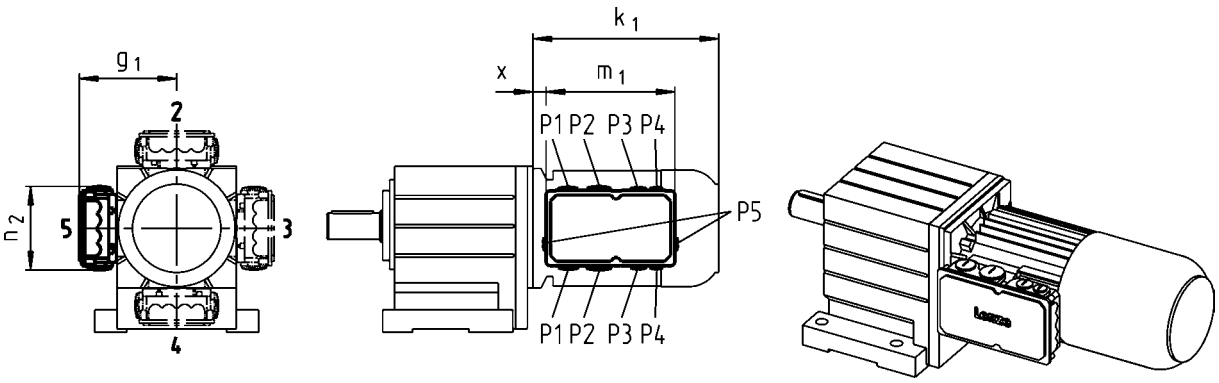

	x	g_1	m_1	n_2	P_1	P_2	P_3	P_4	P_5
	[mm]	[mm]	[mm]	[mm]	[mm]	[mm]	[mm]	[mm]	[mm]
063	2	124	195	125	M25x1.5	M32x1.5	M20x1.5	M20x1.5	
071	5	133							
080	15	142							
090	20	147							
100	21	158							
112	23	168							
132	38	187							
160	35	210	226	127	M50x1.5	M16x1.5		M16x1.5	
180	73	230							
225	95	346	354	205		M63x1.5 [1)]	M50x1.5 [1)]		M16x1.5

[1)] Cable entry only possible at one position.
Terminal box position 2: cable entry at position 5.
Terminal box position 3: cable entry at position 2.
Terminal box position 4: cable entry at position 3.
Terminal box position 5: cable entry at position 4.

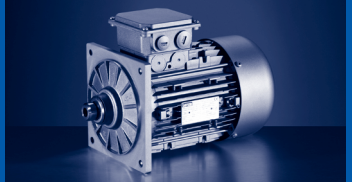

Motor terminal box KK1 with ICN connector

- For motors with connectors, the connector position can be selected in accordance with the terminal box position.
- If preferred positions are not specified in the order, the connector will be positioned as circled on the diagram below.

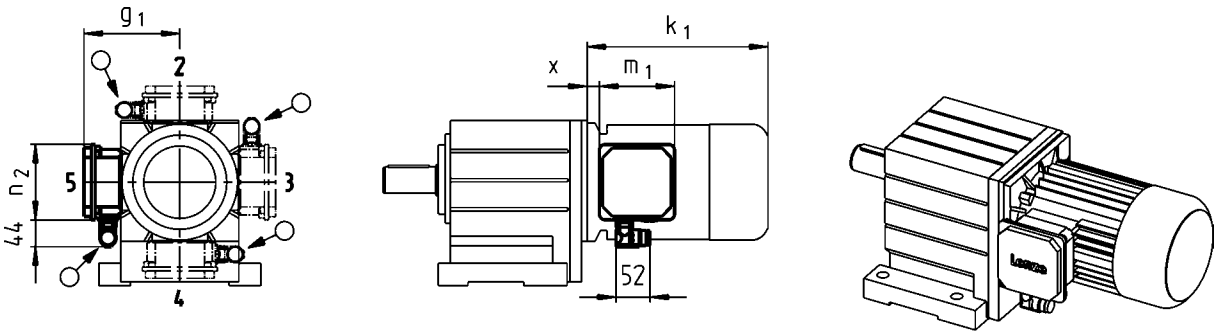

	x	g_1	m_1	n_2
	[mm]	[mm]	[mm]	[mm]
063	8	114	101	101
071	11	123		
080	14	141	115	115
090	19	146		
100	20	157		
112	22	167		
132	33	195	122	122

Position of connector

Motor terminal box with ICN connector in position 2	Motor terminal box with ICN connector in position 3
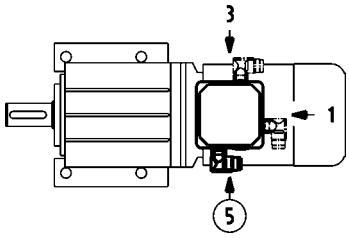	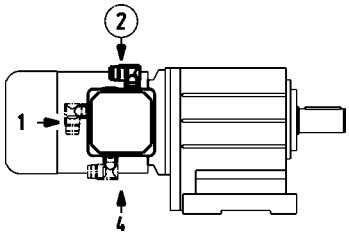
Motor terminal box with ICN connector in position 4	**Motor terminal box with ICN connector in position 5**
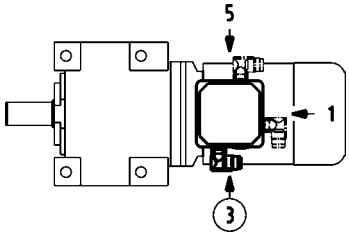	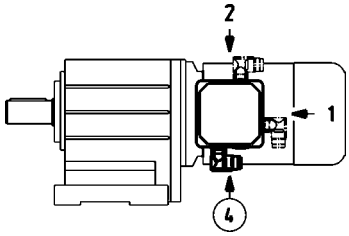

Motor terminal box KK2 / KK3 with ICN connector

- For motors with connectors, the connector position can be selected in accordance with the terminal box position.
- If preferred positions are not specified in the order, the connector will be positioned as circled on the diagram below.

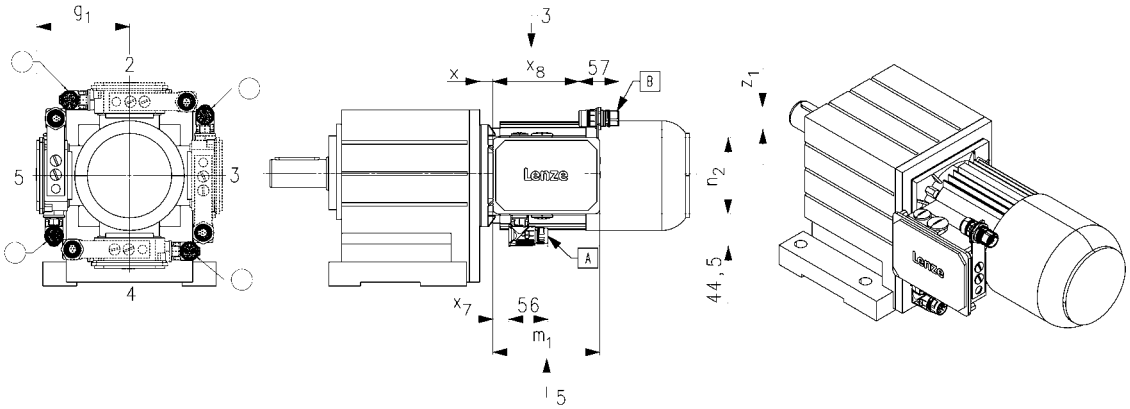

	x	g_1	m_1	n_2	x_7	x_8	$z_{1, max}$
	[mm]	[mm]	[mm]	[mm]	[mm]	[mm]	[mm]
063	13	107	136	103	16	109	43
071	15	118					
080	17	132	152	121	23	125	41
090	22	137					
100	23	147					
112	25	158					
132	38	187	195	125	27	166	71

Position of connector

Motor terminal box with ICN connector in position 2	Motor terminal box with ICN connector in position 3
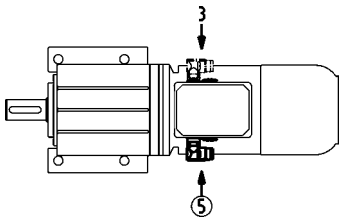	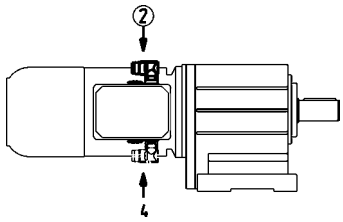

Motor terminal box with ICN connector in position 4	Motor terminal box with ICN connector in position 5
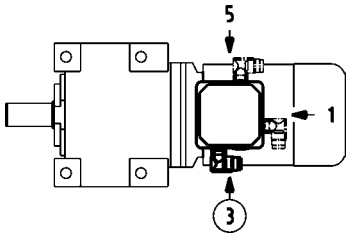	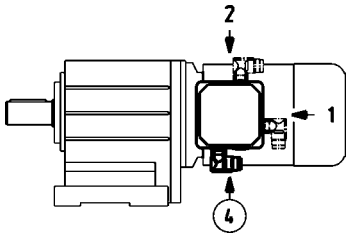

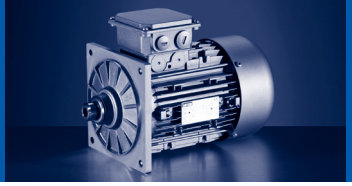

ICN connector for blower

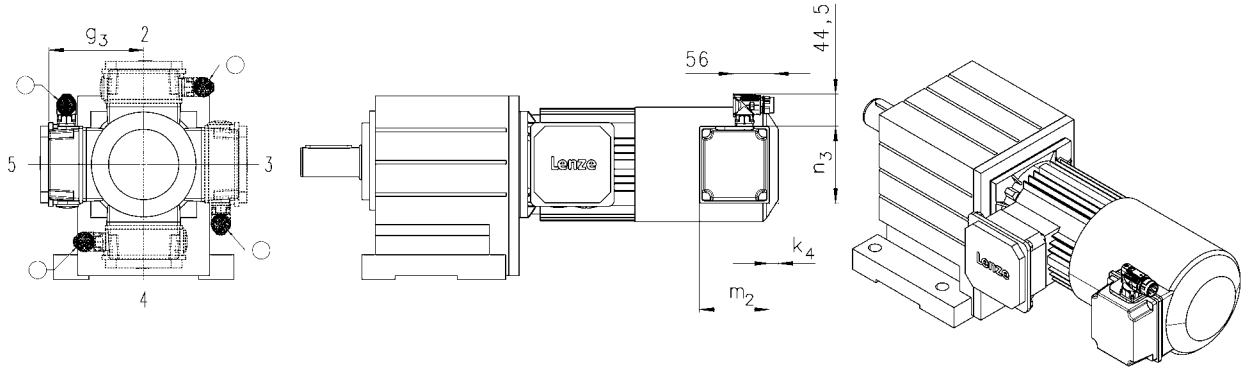

	k_4	g_3	m_2	n_3
	[mm]	[mm]	[mm]	[mm]
063	12	115	**95**	105
071		122		
080	13	132	**96**	106
090	22	141	**95**	105
100		150		
112		162		
132	32	182		
160	31	209	**96**	106
180				
225				

► In addition, the cover of the blower terminal box (including connectors) can be rotated progressively through 90° if necessary.

Motor terminal box with HAN-10E / HAN-Modular connector

- For motors with connectors, the connector position can be selected in accordance with the terminal box position.
- Unless the connector position is specified, it will be supplied in position 1.

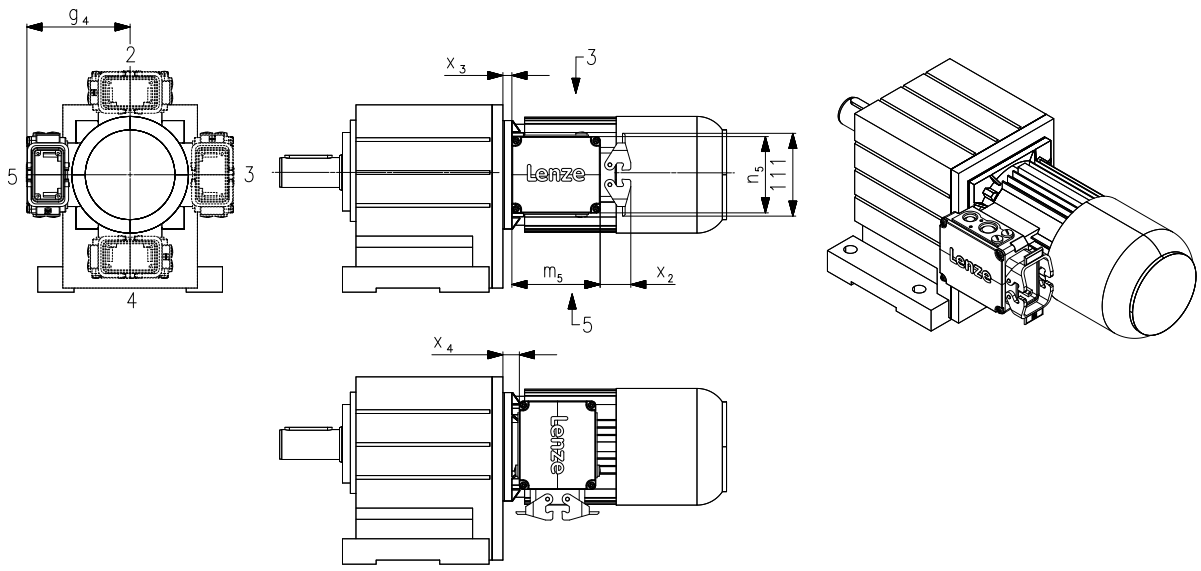

	g_4	x_3	x_4
	[mm]	[mm]	[mm]
063	120	5.00	6.00
071	129	7.00	8.00
080	138	11.0	19.0
090	143	15.0	23.0
100	154	16.0	24.0
112	164	13.5	21.5
132	233	34.5	4.50
160	248	39.0	9.00

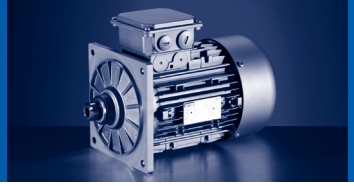

Position of connector

Motor terminal box with HAN connector in position 2	Motor terminal box with HAN connector in position 3
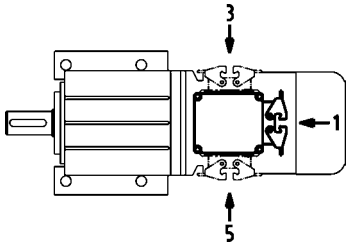	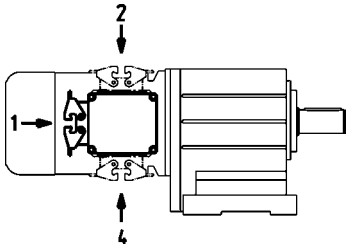
Motor terminal box with HAN connector in position 4	**Motor terminal box with HAN connector in position 5**
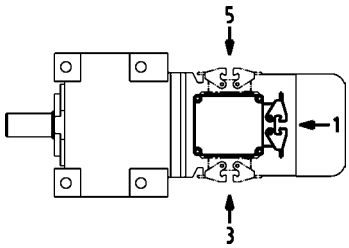	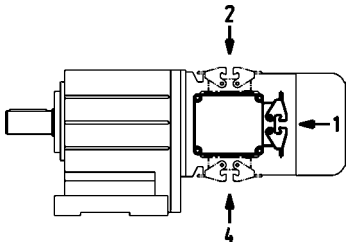

Decentralised frequency inverter 8200 motec

Rated frequency 50 Hz

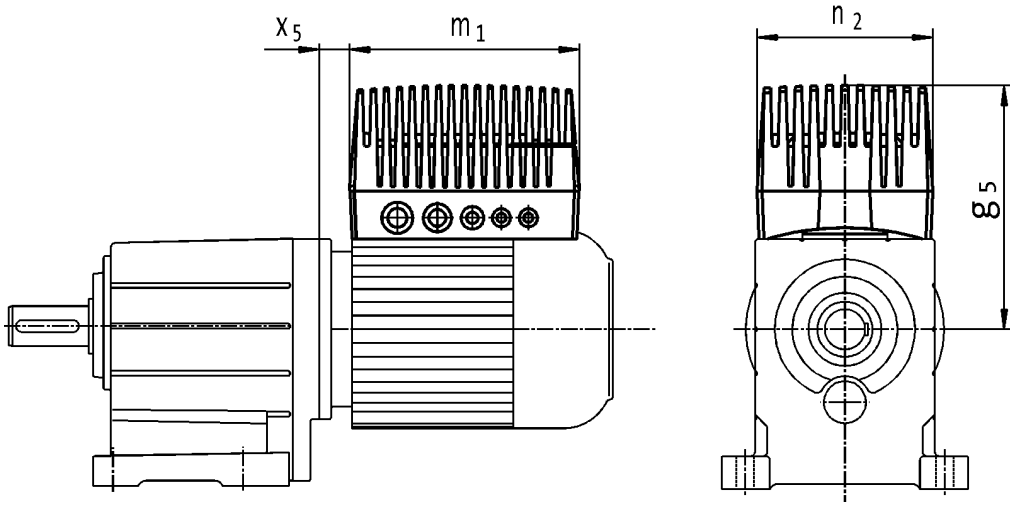

Product key						
Motor		Inverter				
			g_5	x_5	m_1	n_2
			[mm]	[mm]	[mm]	[mm]
MD□□□□□□063-12 MD□□□□□□063-32 MD□□□□□□063-42		E82MV251_2B	171	20	190	138
MD□□□□□□071-32		E82MV371_2B	180	23		
MD□□□□□□071-42		E82MV551_4B	228	10	202	156
MD□□□□□□080-32	MH□□□□□□080-32	E82MV751_4B	223	3		
MD□□□□□□080-42		E82MV152_4B	239		230	176
MD□□□□□□090-32	MH□□□□□□090-12 MH□□□□□□090-32		244	9		
MD□□□□□□100-12	MH□□□□□□100-12	E82MV222_4B	255	10		
MD□□□□□□100-32	MH□□□□□□100-32	E82MV302_4B	271	0	325	211
MD□□□□□□112-22	MH□□□□□□112-22	E82MV402_4B	281	2		
MD□□□□□□112-32		E82MV552_4B				
	MH□□□□□□132-12		300	11		
MD□□□□□□132-22	MH□□□□□□132-22	E82MV752_4B				

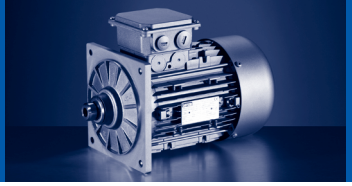

Rated frequency 87 Hz

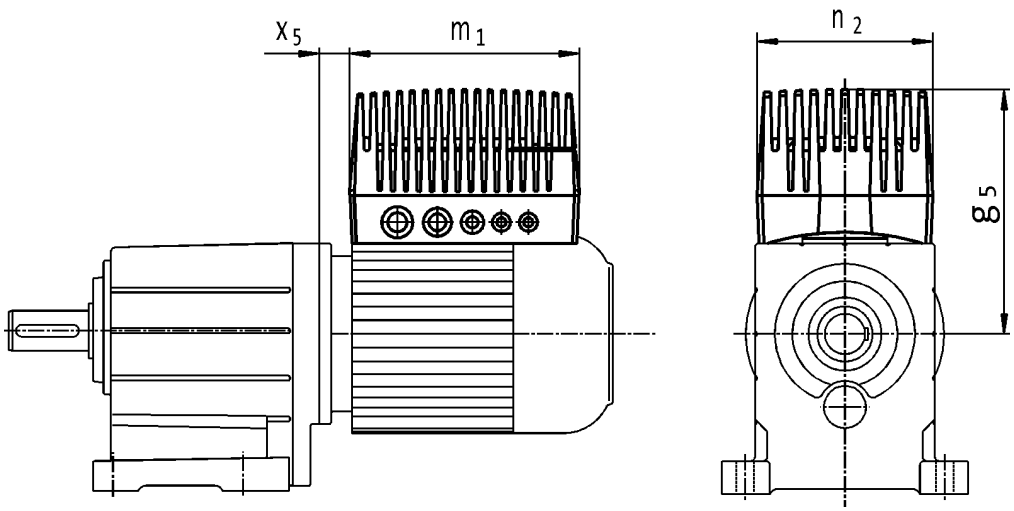

Product key						
Motor		Inverter				
			g_5	x_5	m_1	n_2
			[mm]	[mm]	[mm]	[mm]
MD□□□□□□063-12 MD□□□□□□063-32 MD□□□□□□063-42		E82MV551_4B	216	7	202	156
MD□□□□□□071-32		E82MV751_4B	228	10		
MD□□□□□□071-42		E82MV152_4B	244		230	176
MD□□□□□□080-32	MH□□□□□□080-32		239	3		
MD□□□□□□080-42		E82MV222_4B				
	MH□□□□□□090-12		244	9		
MD□□□□□□090-32	MH□□□□□□090-32	E82MV302_4B	260	-1	325	211
MD□□□□□□100-12	MH□□□□□□100-12	E82MV402_4B	271	0		
MD□□□□□□100-32	MH□□□□□□100-32	E82MV552_4B				
MD□□□□□□112-22	MH□□□□□□112-22	E82MV752_4B	281	2		

Lenze SE
Postfach 10 13 52
D-31763 Hameln
Telefon +49 (0)51 54 / 82-0
Telefax +49 (0)51 54 / 82-28 00
E-Mail: Lenze@Lenze.de
Internet: www.Lenze.com

Lenze Automation GmbH

Hans-Lenze-Straße 1, D-31855 Aerzen
Postfach 101352, D-31763 Hameln
Telefon +49 (0)51 54 / 82-0
Telefax +49 (0)51 54 / 82-28 00

Standort:
Grünstraße 36, D-40667 Meerbusch
Telefon +49 (0)21 32 / 99 04-0
Telefax +49 (0)21 32 / 7 21 90

Standort:
Am Alten Bahnhof 11
D-38122 Braunschweig
Telefon +49 (0)531 / 8 01 78-0
Telefax +49 (0)531 / 8 01 78-20

Lenze Engineering GmbH & Co KG

Postfach 10 13 52, D-31763 Hameln
Hans-Lenze-Straße 1, D-31855 Aerzen
Telefon +49 (0)51 54 / 82-0
Telefax +49 (0)51 54 / 82-28 00

Lenze Drives GmbH

Postfach 10 13 52, D-31763 Hameln
Breslauer Strasse 3, D-32699 Extertal
Telefon +49 (0)51 54 / 82-0
Telefax +49 (0)51 54 / 82-28 00

Lenze Operations GmbH

Postfach 10 13 52, D-31763 Hameln
Hans Lenze Straße 1, D-31855 Aerzen
Telefon +49 (0)51 54 / 82-0
Telefax +49 (0)51 54 / 82-28 00

Lenze Service GmbH

Breslauer Straße 3
D-32699 Extertal

Mechanical Drives
Telefon +49 (0)51 54 / 82-16 26
Telefax +49 (0)51 54 / 82-13 96

Electronic Drives
Telefon +49 (0)51 54 / 82-11 11
Telefax +49 (0)51 54 / 82-11 12

Service Helpline
+49 (0)180 5 20 24 26

Schmidhauser AG

Obere Neustrasse 1
CH-8590 Romanshorn
Telefon +41 (0)71 466 11 11
Telefax +41 (0)71 466 11 10

encoway GmbH

Buschhöhe 2
D-28357 Bremen
Telefon +49 (0)4 21 /33003 - 500
Telefax +49 (0)4 21 /33003 - 555

DEUTSCHLAND/GERMANY

Lenze Vertrieb GmbH *

Ludwig-Erhard-Straße 52-56
D-72760 Reutlingen
Telefon +49 (0)71 21 / 9 39 39-0
Telefax +49 (0)71 21 / 9 39 39-29

Region Nord
HefeHof 25
31785 Hameln
Telefon (0 51 54) 82 44-0
Telefax (0 51 54) 82 44-44

Region West
Postfach 10 12 20
47497 Neukirchen-Vluyn
Kelvinstraße 7
47506 Neukirchen-Vluyn
Telefon (0 28 45) 95 93-0
Telefax (0 28 45) 95 93 93

Region Mitte/Ost
Postfach 1463
35724 Herborn
Austraße 81
35745 Herborn
Telefon (0 27 72) 95 94-0
Telefax (0 27 72) 95 94 94

Region Südwest
Postfach 14 33
71304 Waiblingen
Schänzle 8
71332 Waiblingen
Telefon (0 71 51) 9 59 81-0
Telefax (0 71 51) 9 59 81 50

Region Süd
Am Haag 12
82166 Gräfelfing
Telefon (0 89) 89 56 14-0
Telefax (0 89) 89 56 14 14

WELTWEIT/WORLDWIDE

ALGERIA

see FRANCE

ARGENTINA *

E.R.H.S.A.
Girardot 1368, 1427 BUENOS AIRES
Phone +54 (0)11 / 45 54 32 32
Telefax +54 (0)11 / 45 52 36 11

AUSTRALIA *

FCR Motion Technology Pty. Ltd.
Unit 6, Automation Place
38-40 Little Boundary Rd.
LAVERTON NORTH, Vic. 3026
Phone +61 (3) 9362 6800
Telefax +61 (3) 9314 3744

AUSTRIA *

Lenze Antriebstechnik GmbH
Ipf-Landesstraße 1, 4481 Asten
Phone +43 7224 210 0
Telefax +43 7224 210 999

Lenze Austria Holding GmbH
Ipf-Landesstraße 1, 4481 Asten
Phone +43 7224 210 0
Telefax +43 7224 210 999

Lenze Operations Austria GmbH
Ipf-Landesstraße 1, 4481 Asten
Phone +43 7224 210 0
Telefax +43 7224 210 999

Lenze Verbindungstechnik GmbH
Ipf-Landesstraße 1, 4481 Asten
Phone +43 7224 210 0
Telefax +43 7224 210 998

Lenze Anlagentechnik GmbH
Mühlenstraße 3, 4470 Enns
Phone + 43 7224 210 0
Telefax + 43 7224 210 997

Lenze, Vertriebsbüro Süd
Seering 8, 8141 Unterpremstätten
Phone +43 7224 210 0
Telefax +43 7224 210 7199

Lenze, Vertriebsbüro Ost
Triester Straße 14, 2351 Wr. Neudorf
Phone +43 7224 210 0
Telefax +43 7224 210 7099

Lenze, Vertriebsbüro West
Lustenauerstraße 64, 6850 Dornbirn
Phone +43 7224 210 0
Telefax +43 7224 210 7299

BELARUS

IOOO Lenze
220124, Minsk
Masjukovschina str, 2-a
administrative and amenity buildinq,
attic, office 5
Phone (+375-17) 509-59-55
Telefax (+375-17) 509-65-66
Mobile (+375-29) 694-67-89 Vel
Mobile (+375-29) 505-18-06 MTC

BELGIUM *

Lenze b.v.b.a
Industriepark Noord, 19.
9100 SINT-NIKLAAS
Phone +32 (0)3.542.62.00
Telefax +32 (0)3.541.37.54

BOSNIA-HERZEGOVINA

see CROATIA

BRAZIL *

Lenze Brasil Automação Ltda.
Rua Conde Moreira Lima 589
CEP 04384-030
SÃO PAULO/SP – Brasil
Phone +55 11 2348-6579
Telefax +55 11 2348-6573

Produtos Eletrônicos Metaltex Ltda
(Focus on Sales)
Rua José Rafaelli, 221
Socorro, CEP 04763-280
SÃO PAULO/SP – Brasil
Phone +55 11 56 83 57 00
Telefax +55 11 55 24 23 24

BULGARIA

Lenze Zadvizhvasta Tehnika EOOD
Bul. Maritza 21, Office 204
4003 PLOVDIV
Phone +359 32 940 373
Telefax +359 32 940 349

CANADA *

Lenze Canada Corporation
1535 Meyerside Drive, Unit 1
Mississauga, ON L5T 1M9 CANADA
Phone +1 (508) 278-9100
Telefax +1 (508) 278-7873

CENTRAL AMERICA

see Americas HQ

CHILE

Sargent S.A.
Tecnica Thomas C. Sargent
Av. Gral. Velásquez 5720, San Bernardo
SANTIAGO – CHILE
Phone +56 (0)2 / 51 03 000
Telefax +56 (0)2 / 69 83 989

CHINA *

Lenze Drive Systems (Shanghai) Co. Ltd.
No. 2989, Jiangshan Road
Lingang, Shanghai 201306
CHINA
Phone +86 21 3828 0200
Telefax +86 21 3828 0250

COLOMBIA

Casa Sueca, S.A.
Calle 52 1N-74
CALI
Phone +57 -2- 682 0444
Telefax +57 -2- 683 1411

CROATIA

Lenze mehatronika-pogonska tehnika
d.o.o.
Ulica grada Gospića 3
HR-10000 ZAGREB
Phone +385 1 249-8056
Telefax +385 1 249-8057

CZECH REPUBLIC

Lenze, s.r.o.
Central Trade Park D1
396 01 HUMPOLEC
Phone +420 565 507-111
Telefax +420 565 507-399

Büro Červený Kostelec:
Lenze, s.r.o.
17. listopadu 510
549 41 ČERVENÝ KOSTELEC
Phone +420 491 467-111
Telefax +420 491 467-166

DENMARK *

Lenze A/S
Vallensbækvej 18A
2605 BRØNDBY
Phone +45 / 4696 6666
Telefax +45 / 4696 6660
24 stunde service +45 / 5251 6699

Buero Jylland: Lenze A/S
Niels Bohrs Vej 23
8660 SKANDERBORG
Phone +45 / 46 96 66 88
Telefax +45 / 46 96 66 80

EGYPT

WADI Co. for technologies
and development
P.O.Box 209, new center Ramses
11794 CAIRO, Egypt
11 Syria St., Mohandessin
GIZA, Egypt
Phone +2 (02) 3347 6842
Telefax +2 (02) 3347 6843

ESTONIA

see FINLAND

FINLAND *

Lenze Drives
Tierankatu 8, 20520 TURKU
Phone +358 2 2748 180
Telefax +358 2 2748 189

FRANCE *

Lenze S.A.
Siège
ZI des Mardelles
44 Rue Blaise Pascal
93600 AULNAY-SOUS-BOIS

Services Commerciaux
Phone 0 825 086 036
Telefax 0 825 086 346

Centre de formation
E-Mail : semin.sidonie@lenze.fr

Questions générales / documentation
E-Mail : info@lenze.fr

Service Après-vente / assistance en ligne
Helpline 24/24 : 0 825 826 117
E-Mail : helpline@lenze.fr

Agences en France

Région France Nord :
ZI des Mardelles
44 Rue Blaise Pascal
93600 AULNAY-SOUS-BOIS

Nantes
44000 NANTES

Strasbourg
67870 GRIESHEIM près MOLSHEIM

Rouen
76500 ELBEUF

Région France Sud :
Parc Technologique
97, allée Alexandre Borodine
Immeuble le Douglas 2
69800 SAINT PRIEST

Agen
47270 SAINT-PIERRE de CLAIRAC

GREECE

GEORGE P. ALEXANDRIS SA
12, K. Mavromichali Street
18545 PIRAEUS
Phone +30 210 41 11 841
Telefax +30 210 41 27 058

Industrial Area, Block 48B, 4th Entrance
57022 SINDOS
Phone +30 2310 556 650
Telefax +30 2310 511 815

HUNGARY *

Lenze Hajtástechnika Kft
2040 BUDAÖRS
Gyár utca 2., P.O.Box 322.
Phone +36 23 501-320
Telefax +36 23 501-339

ICELAND

see DENMARK

INDIA

Lenze Mechatronics Pvt. Ltd.
Lenze Plot No. 46A, Sector-10
PCNTDA Industrial Area, Bhosari
PUNE - 411 026
Phone +91-20-66318100
Telefax +91-20-66318120

Kolkata Sales office
2nd Floor, 3/1 Ashton Road
KOLKATA - 700020
Phone +91-33-24190490
Telefax +91-33-24190562

New Delhi Sales office
Flat No - 101, Padma Tower - II
22, Rajendra Place
NEW DELHI - 110008
Phone +91-11-25812113/15
Telefax +91-11-25812114

INDONESIA

see MALAYSIA

IRAN

Tavan Ressan Co.
No.5, Alizadeh Alley,
North Bahar Str.,
Sadr Highway,
Tehran-1931813556-Iran
P.O. Box 19395-5177 Teh-IR
Phone +98 21 / 2769 4444
Telefax +98 21 / 222 444 00

ISRAEL *

Zeev Melcer LTD
P.O.B. 10011, HAIFA BAY 26110
36 Yosef Levi St., Kiriat Bialik
Phone +972-(0)4-8757037
Telefax +972-(0)4-8742172

ITALY *

Lenze Italia S.r.l.
Viale Monza 338, 20128 MILANO
Phone +39 02 / 270 98.1
Telefax +39 02 / 270 98 290

JAPAN *

Miki Pulley Co., Ltd.
1-39-7 Komatsubara, Zama-city
KANAGAWA 228-8577
Phone +81 (0)462 / 58 16 61
Telefax +81 (0)462 / 58 17 04

LATVIA

see LITHUANIA

LEBANON

I. Network Automation s.a.l.
Ground floor - United insurance building
Facing Mercedes Show room
Dora - High Way, BEIRUT-METEN
P.O.Box 835 - Jounieh - Lebanon
Phone +961-1-249562
Telefax +961-1-249563

LITHUANIA

Lenze UAB
Breslaujos g.3, 44403 KAUNAS
Phone +370 37 407174
Telefax +370 37 407175

LUXEMBOURG *

see BELGIUM

MACEDONIA

Lenze Antriebstechnik GmbH
Pretstavnistvo Skopje
ul. Nikola Rusinski 3/A/2, 1000 SKOPJE
Phone +389 2 30 90 090
Telefax +389 2 30 90 091

MALAYSIA

Lenze S.E.A. Sdn Bhd
No. 28 Jalan PJU 3/47
Sunway Damansara, Technology Park
47810 PETALING JAYA
SELANGOR DARUL EHSAN
Phone +60 3 7803 1428
Telefax +60 3 7806 3728

MAURITIUS

Automation & Controls Engineering Ltd
3, Royal Road, Le Hochet, Terre Rouge
MAURITIUS
Phone +230 248 8211
Telefax +230 248 8968

MEXICO

Sales:
see AMERICAS HQ

Service:
Automatización y Control de Energía S.A. de C.V.
Av. 2 No.89 Esq Calle 13
Col. San Pedro de los Pinos
C.P. 03800 MEXICO D.F.
Phone +52 55 2636-3540
Fax +52 55 2636-3541

MONTENEGRO

see MACEDONIA

MOROCCO

GUORFET G.T.D.R
Automatisation Industrielle
Bd Chefchaouni Route 110 km, 11.500
No. 353-Aîn-Sabaâ
CASABLANCA
Phone +212/22-35 70 78
Telefax +212/22-35 71 04

NETHERLANDS *

Lenze B.V., Postbus 31 01
5203 DC 's-HERTOGENBOSCH
Ploegweg 15
5232 BR 's-HERTOGENBOSCH
Phone +31 (0)73 / 64 56 50 0
Telefax +31 (0)73 / 64 56 51 0

NEW ZEALAND *

Tranz Corporation
343 Church Street
P.O. Box 12-320, Penrose
AUCKLAND
Phone +64 (0)9 / 63 45 51 1
Telefax +64 (0)9 / 63 45 51 8

NORWAY *

Dtc- Lenze as
Stallbakken 5, 2005 RAELINGEN
Phone +47 / 64 80 25 10
Telefax +47 / 64 80 25 11

PHILIPPINES

see MALAYSIA

POLAND

Lenze Polska Sp. z o.o.
Ul. Roździeńskiego 188b
40-203 KATOWICE
Phone +48 (0) 32 203 97 73
Telefax +48 (0) 32 781 01 80

Torun Office
Lenze Polska Sp. z o.o.
Ul. Rydygiera 47
87-100 TORUŃ
Phone +48 (0) 56 658 28 00
Telefax +48 (0) 56 645 33 56

PORTUGAL *

Costa Leal el Victor
Electronica-Pneumatica, Lda.
Rua Prof. Augusto Lessa, 269,
Apart. 52053
4202-801 PORTO
Phone +351-22 / 5 50 85 20
Telefax +351-22 / 5 02 40 05

ROMANIA

see AUSTRIA

RUSSIA

OOO Lenze
Shchelkovskoye shosse 5
105122 MOSCOW
Phone +7 495 921 3250
Telefax +7 495 921 3259

SERBIA

see MACEDONIA

SINGAPORE *

see MALAYSIA

SLOVAC REPUBLIC

see CZECH REPUBLIC

ECS Sluzby spol. s.r.o.
Staromlynska 29
82106 BRATISLAVA
Phone +421 2 45 64 31 47
Telefax +421 2 45 25 96 06

SLOVENIA

LENZE pogonska tehnika, d.o.o.
Kidričeva ulica 24
3000 CELJE
Phone +386 03 426 46 40
Telefax +386 03 426 46 50

SOUTH AFRICA *

S.A. Power Services (Pty.) Ltd.
Unit 14, Meadowbrook Business Estates
Jacaranda Ave, Olivedale
Randburg 2158, P.O.Box 1137
RANDBURG 2125
Phone +27(11) 462-8810
Telefax +27(11) 704-5775

SOUTH KOREA *

Lenze Representative Office
No. 606, Daeryung Technotown 6th,
493-6, Gasan-dong, Geumcheon-gu,
SEOUL 153-774
Phone +82 2-792-7017
Telefax +82 2-792-7018

SPAIN *

Lenze Transmisiones S.A.
Edificio TCA
C/ Henri Dunant, 9.
08173 SANT CUGAT DEL VALLÈS
(Barcelona)
Phone 902 02 79 04
(0034) 937 207 680
Telefax 902 02 63 69

Lenze Delegación Norte
Phone 902 02 79 04
(0034) 937 207 680

Lenze Delegación Levante
Cullera, 73- 4ºD
46035 BENIMAMET (Valencia)
Phone 902 02 79 04
(0034) 937 207 680
Telefax 902 02 63 69

Lenze Delegación Madrid
C/ Poema Sinfónico Nº 25-27
Local nº 3, escalera 1, Planta Baja.
28054 MADRID
Phone 915 103 341
Telefax 915 102 061

SWEDEN *

Lenze Transmissioner AB
P.O.Box 10 74, Attorpsgatan, Tornby Ind.
58110 LINKÖPING
Phone +46 (0)13 / 35 58 00
Telefax +46 (0)13 / 10 36 23

SWITZERLAND *

Lenze Bachofen AG
Ackerstrasse 45
8610 USTER
Phone +41 (0) 43 399 14 14
Telefax +41 (0) 43 399 14 24

Vente Suisse Romande:
Route de Prilly 25
1023 CRISSIER
Phone +41 (0)21 / 63 72 19 0
Telefax +41 (0)21 / 63 54 76 2

SYRIA

Zahabi Co.
8/5 Shouhadaa Street
P.O.Box 8262
ALEPPO-SYRIA
Phone +963 21 21 22 23 5
Telefax +963 21 21 22 23 7

TAIWAN *

Lenze Taiwan Representative Office
6F.-1, No.136, Sec. 3, Zhongxiao E. Rd.
TAIPEI City, 10655, Taiwan
Phone +886 / (0)2-2721-2161
Telefax +886 / (0)2-2721-2706

THAILAND

see MALAYSIA

TUNESIA

AMF Industrielle Sarl
Route de Gremda - Km 0,2
Immeuble El Madina,
Centre Bloc B - 5 ème - appt 52
3002 SFAX
Phone +216 74 403 514
Telefax +216 74 402 516

TURKEY

LSE Elektrik
Elektronik Makina
Otomasyon Mühendislik
Sanayi ve Ticaret Ltd. Şti
Atatürk mah. Cumhuriyet cad.
Yurt sok. No: 7
ÜMRANIYE/İSTANBUL
Phone +90 (0)216 / 316 5138 pbx
Telefax +90 (0)216 / 443 4277

UKRAINE

SV Altera, Ltd.
Lepse ave., 4
KIEV, 03067
Phone +38 044 496 18 88
Telefax +38 044 496 18-18

UNITED ARAB EMIRATES

LPT (FZC)
X4 Building No. 37
Sharjah Airport Free Zone (SALF ZONE)
SHARJAH
Phone +971 6 5573205
Telefax +971 6 5573206

UNITED KINGDOM/EIRE *

Lenze Ltd.
Fraser Road
Priory Business Park
BEDFORD MK44 3WH
Phone +44 (0)1234 / 75 32 00
Telefax +44 (0)1234 / 75 32 20

USA *

AMERICAS HQ
Lenze Americas Corporation
630 Douglas Street
UXBRIDGE, MA 01569
Phone +1 508 278 9100
Telefax +1 508 278 7873

Sales:
see Americas HQ

Operations:
Lenze AC Tech Corporation
630 Douglas Street
UXBRIDGE, MA 01569
Phone +1 508 278 9100
Telefax +1 508 278 9294

Lenze DETO Drive Systems
see Americas HQ

VIETNAM

see MALAYSIA

9

*** Countries connected to the free expert helpline 008000 24 hours** (008000 24 46877)

It's good to know | why we are there for you

"Our customers come first. Customer satisfaction is what motivates us. By thinking in terms of how we can add value for our customers we can increase productivity through reliability."

"We will provide you with exactly what you need – perfectly co-ordinated products and solutions with the right functions for your machines and installations. That is what we mean by 'quality'."

"Take advantage of our wealth of expertise. For more than 60 years now we have been gathering experience in various fields and implementing it consistently and rigorously in our products, motion functions and pre-configured solutions for industry."

"The world is our marketplace. Wherever you are in the world, we are nearby, providing you with our drive and automation solutions."

Algeria · Argentina · Australia · Austria · Belarus · Belgium · Bosnia-Herzegovina · Brazil · Bulgaria · Canada · Central America · Chile
China · Colombia · Croatia · Czech Republic · Denmark · Egypt · Estonia
Finland · France · Germany · Greece · Hungary · Iceland · India · Indonesia
Iran · Israel · Italy · Japan · Latvia · Lebanon · Lithuania · Luxembourg
Macedonia · Malaysia · Mauritius · Mexico · Montenegro · Morocco
Netherlands · New Zealand · Norway · Philippines · Poland · Portugal
Romania · Russia · Serbia · Singapore · Slovac Republic · Slovenia
South Africa · South Korea · Spain · Sweden · Switzerland · Syria
Taiwan · Thailand · Tunesia · Turkey · Ukraine · United Arab Emirates
United Kingdom/Eire · USA · Vietnam

You can rely on our service. Expert advice is available 24 hours a day, 365 days a year, in more than 30 countries via our international helpline: 008000 24 Hours (008000 2446877).

www.Lenze.com

13375411

Lenze Drives GmbH * Breslauer Strasse 3 * D-32699 Extertal, Germany * Subject to technical alterations * Printed in Germany 01.2012 Version 1.2 en